Bedford Regional Water Authority

BEDFORD REGIONAL WATER AUTHORITY

MASTER SPECIFICATIONS

October 6, 2017
Revised December 12, 2017
Revised February 15, 2018

COMMONWEALTH OF VIRGINIA
RHONDA BEALE ENGLISH
Lic. No. 037638
2/15/2018
PROFESSIONAL ENGINEER

PREPARED BY THE
BEDFORD REGIONAL WATER AUTHORITY
1723 FALLING CREEK ROAD
BEDFORD, VIRGINIA 24523

Brian M. Key, PE, Executive Director
Nathan Carroll, Assistant Director
Rhonda B. English, PE, Engineering Manager

BRWA JN: 2016-086

BEDFORD REGIONAL WATER AUTHORITY
MASTER SPECIFICATIONS

TABLE OF CONTENTS

	No. of Pages
DIVISION 1 - General Requirements	
Section 01 33 00 - Submittal Procedures	3
Section 01 66 00 - Product Delivery, Storage, and Handling Requirements	1
DIVISION 2 - EXISTING CONDITIONS	
Section 02 41 00 - Demolition	7
DIVISION 3 - CONCRETE	
Section 03 30 00 - Cast-in-Place Concrete	13
Section 03 41 00 - Precast Structural Concrete	11
DIVISION 31 - EARTHWORK	
Section 31 00 00 - Earthwork	8
Section 31 10 00 - Site Clearing	4
Section 31 23 33 - Trenching and Backfilling	9
Section 31 25 00 - Erosion and Sedimentation Controls	7
DIVISION 32 - EXTERIOR IMPROVEMENTS	
Section 32 10 00 - Bases, Ballasts, and Pavements	9
Section 32 31 13 - Chain Link Fences and Gates	5
Section 32 91 19.13 - Topsoil Placement and Grading	2
Section 32 92 19 - Seeding	5
DIVISION 33 - UTILITIES	
Section 33 03 00 - Utility Pipe and Materials	21
Section 33 04 00 - Valves and Cocks	10
Section 33 10 00 - Water Utilities	5
Section 33 12 13.13 - Water Supply Backflow Preventer Assemblies	3
Section 33 12 19 - Water Utility Distribution Fire Hydrants	4
Section 33 30 00 - Sanitary Sewerage Utilities	7
APPENDICES	
Appendix A - Standard Details	
Appendix B - Waiver and Material Approval Request Forms	
Appendix C - Test Tables and Data Sheets	
Appendix D - Bedford County Erosion & Sediment Control Ordinance and Seeding Requirements (Latest edition)	
REFERENCE	
BRWA Approved Products List	

SECTION 01 33 00 - SUBMITTAL PROCEDURES

PART 1 GENERAL

1.1 DESCRIPTION

1. Work Included: The CONTRACTOR shall provide submittals for the AUTHORITY's approval to show compliance with the specifications. Unacceptable submittals shall be revised and resubmitted as necessary until compliance with the specifications is achieved. If the CONTRACTOR fails to provide an acceptable submittal during the second review, the CONTRACTOR will be responsible for all fees associated with additional reviews.

2. Related Sections:

   1) Appendix B – Waiver and Substitution Request Forms

1.2 QUALITY ASSURANCE

1. Coordination of Submittals: The CONTRACTOR shall be responsible for reviewing the Specifications to ensure that the items being submitted conform in all respects with the requirements. All submittals shall be provided to the AUTHORITY at least 3 weeks prior to commencing work on the items being submitted. All submittals must be approved prior to scheduling preconstruction meeting.

2. Approved Products: Product submittals shall comply with the Bedford Regional Water Authority Approved Products List, latest edition. Products not specifically listed on the Approved Products List should be submitted following the procedures for Substitutions as addressed in this Section, except where noted in the Contract Documents, Approved Products List, or these Master Specifications that substitutions are not permitted.

3. Substitutions:

   1) The CONTRACTOR is bound to the standards of quality established in the Contract Documents.

   2) The substitution of materials, equipment or methods shall not be permitted unless prior approval for the substitution has been given in writing by the AUTHORITY.

   3) The CONTRACTOR shall certify that the proposed substitution has been determined to be equal or superior to the product and/or construction method specified. The proposed substitution shall be in complete compliance with the provisions in the Contract Documents.

   4) Requests for substitution of materials must be submitted to the AUTHORITY using the "Substitution / Or Equal Request" form in Appendix B of these Master Specifications.

PART 2 PRODUCTS

2.1 SUBMITTALS

1. General: The CONTRACTOR shall comply with this specification section regarding Shop Drawing and Sample submittals. Any deviations from the plans or specifications shall be clearly noted on the submittals and be accompanied by a completed Substitution / Or Equal Request form located in Appendix B of these Master Specifications.

2. Submissions: Submittals will be stamped by the AUTHORITY in one of the following ways:

1) "No Exceptions Taken" - No exceptions are taken, subject to compliance with the Contract Documents.

2) "Furnish as Corrected" - Minor corrections are noted and a resubmittal is not required, subject to compliance with the corrections and the Contract Documents.

3) "Rejected - See Remarks" - The submittal material, method or system is totally rejected and does not meet the intent of the Specifications.

4) "Revise and Resubmit" - Revision prior to resubmittal is required.

3. Submission Procedures: The CONTRACTOR shall provide a minimum of 3 copies and a maximum of 6 copies of each submittal to the AUTHORITY for review. Two reviewed copies will be retained by the AUTHORITY and the remaining reviewed copies will be returned to the CONTRACTOR.

2.2 SHOP PLANS

1. Scale and Measurements: Shop plans shall be to a scale sufficiently large to show all pertinent aspects of the item.

2. Review Comments: The AUTHORITY will show all review comments on each copy of the submittal to be distributed as stated in Section 2.1.

2.3 MANUFACTURER'S LITERATURE

1. General: The CONTRACTOR shall provide all manufacturer's data pertinent to the submittal, clearly showing which portions of the contents are being provided for review.

2.4 OPERATION AND MAINTENANCE MANUALS

1. General: The CONTRACTOR shall provide the AUTHORITY, prior to submitting the 50 percent pay request, copies of complete operation and maintenance manuals and other written recommendations for operation, as provided by the manufacturer.

2.5 RECORD PLANS

1. General: The CONTRACTOR shall submit to the AUTHORITY at the final completion inspection, certified record plans of the project. The AUTHORITY shall provide the CONTRACTOR with copies of plan sheets upon request. The record plans shall show all changes to the horizontal location and elevations of all structures and piping. The record plans shall be certified by a licensed Engineer or Land Surveyor.

2.6 PRECONSTRUCTION AUDIO-VISUAL SURVEY

1. General: Prior to starting construction, CONTRACTOR shall perform an audio-visual survey of the project site. Record shall be saved as digital images on DVD or USB flash drive stored at a minimum resolution of 720X480. Video display will show location, description of existing structures and landscaping, including time, date, address, and compass direction of travel and view. Footage shall be correlated to plan stationing. Vulnerable, damaged, or deteriorated areas within the zone of influence will be shown. Travel speed shall be approximately 50 ft/min. with a minimum camera elevation of 5 feet over the work with a minimum 30 foot width showing construction area. Recording must be compatible with standard DVD – Video or digital format for playback. Index correlated to approved design plans shall be provided. CONTRACTOR shall provide copy to the AUTHORITY at the Preconstruction Conference. CONTRACTOR shall provide a remake of any video not to AUTHORITY’s satisfaction. Any remakes shall be at no additional expense to the AUTHORITY.

PART 3 EXECUTION

3.1 IDENTIFICATION OF SUBMITTALS

1. Numbering: All submittals shall be consecutively numbered. Resubmittals shall cite the original submittal number for reference.

2. Transmittal: Each submittal shall be accompanied by a transmittal letter showing all the information required for identification and checking, including the appropriate Specification sections.

3. Submittal Log: The CONTRACTOR shall maintain a submittal log for the duration of the Work that indicates current status of all submittals. The submittal log shall be available to the AUTHORITY at all times for their review.

3.2 AUTHORITY'S REVIEW

1. General: Review by the AUTHORITY does not relieve the CONTRACTOR from responsibility for errors which may result from the submitted data.

2. Revisions: All revisions requested by the AUTHORITY will be required. If the CONTRACTOR is considering any additional required revision, he shall notify the AUTHORITY as provided in Part 1 of this specification section.

END OF SECTION

SECTION 01 66 00 – PRODUCT DELIVERY, STORAGE, AND HANDLING REQUIREMENTS

PART 1 GENERAL

1.1 DESCRIPTION

1. Work Included: Products to be used in the work shall be properly stored and handled as described in this section. This section is not intended as a substitution for good judgment by the CONTRACTOR, nor is it intended to limit protective measures to be taken by the CONTRACTOR during construction.

1.2 QUALITY ASSURANCE

1. General: The CONTRACTOR shall take the necessary measures to protect the materials and work as required.

1.3 MANUFACTURER'S RECOMMENDATIONS

1. General: Unless otherwise approved by the AUTHORITY or specified herein, the CONTRACTOR shall comply with the manufacturer's recommendations on product handling, storage and protection.

1.4 PACKAGING

1. General: Products shall be delivered to the job site in their manufacturer's original container with labels intact and legible. Damaged materials shall be immediately replaced at no additional cost to the AUTHORITY. The AUTHORITY may reject, as non-complying, any materials that do not bear the proper identification such as manufacturer, grade, quality and other pertinent information.

1.5 PROTECTION OF SURFACES

1. General: The CONTRACTOR shall protect and maintain all finished surfaces from damage during storage and construction. Finished surfaces shall remain clean, unmarred and suitably protected until the work is accepted by the AUTHORITY.

1.6 REPAIRS AND REPLACEMENTS

1. General: In the event of damage, the CONTRACTOR shall make the necessary replacements at no additional cost to the AUTHORITY. No extension of contract time will be given for work associated with replacement of damaged materials. Damaged materials shall be removed immediately from the jobsite.

1.7 DELIVERY AND STORAGE

1. Delivery: The CONTRACTOR shall be responsible for making all the arrangements for the delivery, unloading, receiving and storage of materials.

2. Storage: The CONTRACTOR shall store all products and materials in a protected location to prevent any damage or deterioration due to moisture, freezing temperatures or other detrimental conditions.

3. Damaged or Rejected Material: Any damaged or rejected material shall be removed from the job site immediately.

END OF SECTION

SECTION 02 41 00 – DEMOLITION

PART 1 GENERAL

1.1 DESCRIPTION

1. Work Included: Provide labor, equipment, and materials to perform demolition as shown on the Drawings including:

   1) Demolition and removal of buildings and foundations.

   2) Demolition and removal of selected site elements.

   3) Repair procedures for selective demolition operations.

2. Related Sections: Additional Sections of the Documents which are referenced in this Section Include:

   1) Section 01 33 00 – Submittal Procedures

   2) Section 31 00 00 – Earthwork

   3) Section 31 23 33 – Trenching and Backfilling

1.2 REFERENCES

1. General: The work shall comply with the most recent standards or tentative standards as published at the date of the Contract and as listed in the Specification using abbreviations shown.

2. American National Standards Institute (ANSI):

   1) A10.6 Safety and Health Program Requirements for Demolition Operations

3. National Fire Prevention Association (NFPA):

   1) 241 Standard for Safeguarding Construction, Alteration, and Demolition Operations

4. Occupational Safety and Health Administration (OSHA), Safety and Health Regulations for Construction

   1) Subpart U Blasting and the Use of Explosives

5. Virginia Board of Housing and Community Development (BHCD)

   1) Virginia Statewide Fire Prevention Code

6. Virginia Department of Transportation (VDOT) - Road and Bridge Specifications:

   1) 218 Hydraulic Cement Mortar and Grout

   2) 508 Demolition of Pavement and Obscuring Roadway

   3) 511 Allaying Dust

   4) 516 Demolition of Buildings And Clearing Parcels

1.3 DEFINITIONS

1. Remove: Detach items from existing construction and legally dispose of them off-site, unless indicated to be removed and salvaged or removed and reinstalled.

2. Remove and Salvage: Detach items from existing construction and deliver them to the AUTHORITY.

3. Remove and Reinstall: Detach items from existing construction, prepare them for reuse, and reinstall them where indicated.

4. Existing to Remain: Existing items of construction that are not to be removed and that are not otherwise indicated to be removed, removed and salvaged, or removed and reinstalled.

1.4 MATERIALS OWNERSHIP

1. General: Except for items or materials indicated to be reused, salvaged, reinstalled, or otherwise indicated to remain AUTHORITY'S property, demolished materials shall become CONTRACTOR'S property upon issuance of the Notice to Proceed and shall be removed from Project Site.

2. Salvaged Items: Historic items, relics, and similar objects including, but not limited to, commemorative plaques and tablets, antiques, and other items of interest or value to AUTHORITY that may be encountered during demolition remain AUTHORITY'S property. Carefully remove and salvage each item or object in a manner to prevent damage and deliver promptly to AUTHORITY. Coordinate with AUTHORITY, who will establish special procedures for removal and salvage.

1.5 SUBMITTALS

1. General: Shall be in accordance with Section 01 33 00 – Submittal Procedures.

2. Demolition Plan: Provide a plan outlining the general procedures and sequence to be used in performing demolition. Plan shall include traffic control needs and timing, as well as procedures for environmental and public protection. Plan shall also indicate disposal sites for demolition materials. When work is proposed within a state maintained right-of-way, the demolition plan must be approved by VDOT.

3. Hazardous Material Records: If disposal of hazardous materials is required, provide signed manifests from a licensed hauler documenting delivery to a licensed disposal site. Provide a receipt indicating acceptance of materials by a facility licensed to accept hazardous materials.

1.6 QUALITY ASSURANCE

1. Demolition Firm Qualifications: Document that firm has specialized in demolition work similar in material and extent to that indicated for this Project.

2. Regulatory Requirements: Comply with governing EPA notification regulations before beginning selective demolition. Comply with hauling and disposal regulations of authorities having jurisdiction.

3. Standards: Comply with ANSI A10.6 and NFPA 241.

4. Predemolition Conference: Conduct conference at Project site to review methods and procedures related to selective demolition including, but not limited to, the following:

    1) Inspect and discuss condition of construction to be selectively demolished.

    2) Review structural load limitations of existing structure.

3) Review and finalize selective demolition schedule and verify availability of materials, demolition personnel, equipment, and facilities needed to make progress and avoid delays.

4) Review requirements of work performed by other trades that rely on substrates exposed by selective demolition operations.

5) Review coordination and timing of the AUTHORITY's staged evacuation and partial continued use of the building during demolition and construction operations, if applicable.

1.7 PROJECT CONDITIONS

1. Coordination: Conduct selective demolition so AUTHORITY'S or property owner's operations will not be disrupted. Provide not less than 72 hours' written notice to AUTHORITY and adjacent property owner of activities that will affect their operations.

2. Access: Maintain access to existing walkways, corridors, and other adjacent occupied or used facilities.

   1) Do not close or obstruct walkways, corridors, or other occupied or used facilities without written permission from authorities having jurisdiction.

3. Existing Conditions: The AUTHORITY assumes no responsibility for condition of areas to be selectively demolished.

   1) Conditions existing at time of inspection for bidding purpose will be maintained by the AUTHORITY as far as practical.

4. Removed Items: Storage or sale of removed items or materials on-site will not be permitted.

PART 2 PRODUCTS

(Not applicable)

PART 3 EXECUTION

3.1 EXAMINATION

1. Verify that utilities have been disconnected and capped.

2. Survey existing conditions and correlate with requirements indicated to determine extent of selective demolition required.

3. Perform surveys as the Work progresses to detect hazards resulting from selective demolition activities.

3.2 UTILITY SERVICES

1. Existing Utilities: Maintain services indicated to remain and protect them against damage during selective demolition operations.

2. Do not interrupt existing utilities serving occupied or operating facilities unless authorized in writing by the AUTHORITY and authorities having jurisdiction. Provide temporary services during interruptions to existing utilities, as acceptable to the AUTHORITY and to authorities having jurisdiction.

   1) Provide at least 72 hours written notice to the AUTHORITY if shutdown of service is required during changeover.

3. Utility Requirements: Locate, identify, disconnect, and seal or cap off indicated utilities serving areas to be selectively demolished.

   1) AUTHORITY will arrange to shut off indicated public utilities when requested by CONTRACTOR.

   2) If utility services are required to be removed, relocated, or abandoned, before proceeding with selective demolition, provide temporary utilities that bypass area of selective demolition and that maintain continuity of service to other parts of the building or adjacent buildings.

   3) Cut off pipe or conduit in walls or partitions to be removed. Cap, valve, or plug and seal remaining portion of pipe or conduit after bypassing. Do not start selective demolition work until utility disconnecting and sealing have been completed and verified in writing.

4. Acceptable Methods: Where water or sewer mains are required to be demolished or abandoned, the following methods shall be acceptable, unless otherwise stated by the AUTHORITY or VDOT.

	ALLOWABLE DEMOLITION AND ABANDONMENT METHODS			
Item	Sealing Ends	Grout Fill	Removal	Crushed In Place
Pressure Mains:				
1. Piping not under roadway:				
a) 12-inch and smaller	X	X	X	X
b) Larger than 12-inch		X	X	X
2. Piping under roadway				
a) 6-inch and smaller	X	X	X	
b) Larger than 6-inch		X	X	
Gravity Sewer Mains:				
1. 8-inch and smaller	X	X	X	X
2. Larger than 8-inch		X	X	X

1) Pipeline Abandonment

   a. Plugging: Abandonment of 2-inch mains shall include a plug fitting installed directly into the tee fitting or corporation stop located on the remaining active main. Abandoned mains 3-inches and larger shall be plugged with a plugged fitting at points specified in the Drawings.

   b. Grout Filling: The abandoned main shall be grout filled by pumping a grout mixture into the main with an approved grout per VDOT Section 218. The main shall be completely filled, leaving no voids or air spaces. A pressure grout pump shall be utilized in the grouting of existing pipes. Unless otherwise approved by the AUTHORITY, grout shall be pumped into the pipe from the inlet end to the receiving end (exit end). Samples of the outgoing water (exit end) shall be made until the exiting grout mix is observed to be of similar density to the grout being injected at the inlet end.

   c. Sealing: All below grade pipe to be abandoned by sealing shall be sealed with grout, Class “C” concrete or brick and mortar. The grout, concrete or brick and mortar shall extend into the pipe for at least 12-inches, forming a solid waterproof plug completely bonded to the pipe.

   d. Asbestos Pipe: Abandonment of asbestos piping shall be by grout filling or sealing. CONTRACTOR is responsible for adhering to all applicable safety standards for handling asbestos material.

2) Pipeline Removal

a. Below Grade: When called for on the Drawings, removal of existing pipelines shall mean complete removal of the existing pipeline and disposal of the pipe and appurtenances not indicated to be salvaged. Backfill and compaction shall conform to specification sections of Division 31 00 00 – Earthwork. When existing pipeline is within casing under a roadway, the pipeline shall be removed from the casing and the casing plugged at both ends unless otherwise directed by the AUTHORITY or VDOT.

b. Above Grade: All existing piping and appurtenances located above ground shall be removed to a minimum of 36-inches below the finish grade. The abandoned pipe ends, below grade, shall be sealed with Class "C" concrete or completely grout filled as specified in this section and as indicated on the Drawings.

c. Asbestos Pipe: Removal of asbestos pipe shall be as stated above. CONTRACTOR is responsible for adhering to all applicable safety standards for handling asbestos material.

3) Underground Concrete Structure, Vault, or Manhole Abandonment

a. Where an underground concrete structure, vault, or manhole is required to be abandoned, abandon in place and backfill in accordance with Section 31 23 33 – Trenching and Backfilling.

3.3 PREPARATION

1. Dangerous Materials: Drain, purge, or otherwise remove, collect, and legally dispose of chemicals, gases, acids, flammables, or other dangerous materials before proceeding with selective demolitions operations.

2. Site Access and Temporary Controls: Conduct selective demolition and debris-removal operations to ensure minimum interference with roads, streets, walks, walkways, and other adjacent occupied and used facilities.

1) Do not close or obstruct streets, walks, walkways, or other adjacent occupied or used facilities without permission from the AUTHORITY and authorities having jurisdiction. Provide alternate routes around closed or obstructed traffic ways if required by the AUTHORITY or governing regulations.

2) Erect temporary protection, such as walks, fences, railings, canopies, and covered passageways, where required by the AUTHORITY or authorities having jurisdiction.

3) Protect existing site improvements, appurtenance, and landscaping to remain.

4) Trees within the project site which may be damaged during demolition and which are indicated to be left in place shall be protected by a 6 foot high fence. The fence shall be securely erected a minimum of 5 feet from the trunk of individual trees or follow outer perimeter of branches or clumps of trees. Any tree designated to remain that is damaged during the Work shall be replaced in kind or otherwise with Authority's approval by the Contractor at no cost to the Authority.

3. Temporary Facilities: Provide temporary barricades and other protection required to prevent injury to people and damage to adjacent buildings and facilities to remain.

1) Provide protection to ensure safe passage of people around demolition area.

3.4 POLLUTION CONTROLS

1. Dust Control: Use water mist, temporary enclosures, and other suitable methods to limit spread of dust and dirt. Comply with VDOT 511 Allaying Dust.

    1) Do not use water when it may damage existing construction or create hazardous or objectionable conditions, such as ice, flooding, and pollution.

2. Disposal: Legally remove and transport debris in a manner that will prevent spillage on adjacent surfaces and areas.

    1) Remove debris from elevated portions of building by chute, hoist, or other device that will convey debris to grade level in a controlled descent.

    2) Street must be swept clean at the end of each day. Any unsafe materials on the street must be removed immediately.

    3) Local regulations regarding transportation and disposal apply.

3. Cleaning: Clean adjacent structures and improvements of dust, dirt, and debris caused by selective demolition operations. Return adjacent areas to condition existing before selective demolition operations began.

3.5 SELECTIVE DEMOLITION

1. General: Demolish and remove existing construction only to the extent required by new construction and as indicated. Use methods required to complete the Work within limitations of governing regulations and as follows:

    1) Proceed with selective demolition systematically, and in accord with the approved demolition plan.

    2) Do not use cutting torches until work area is cleared of flammable materials. At concealed spaces, such as duct and pipe interiors, verify condition and contents of hidden space before starting flame-cutting operations. Maintain fire watch and portable fire-suppression devices during flame-cutting operations.

    3) Maintain adequate ventilation when using cutting torches.

    4) Remove decayed, vermin-infested, or otherwise dangerous or unsuitable materials and promptly and legally dispose of off-site.

    5) Remove structural framing members and lower to ground by method suitable to avoid free fall and to prevent ground impact or dust generation.

    6) Locate selective demolition equipment and remove debris and materials so as not to impose excessive loads on supporting walls, floors, or framing.

    7) Legally dispose of demolished items and materials promptly off-site.

    8) Return elements of construction and surfaces that are to remain to condition existing before selective demolition operations began.

2. Existing Items to Remain: Protect construction indicated to remain against damage and soiling during selective demolition. When permitted by the AUTHORITY, items may be removed to a suitable, protected

storage location during selective demolition and cleaned and reinstalled in their original locations after selective demolition operations are complete.

3. Concrete: Where selective demolition is required, demolish in sections. Cut concrete full depth at junctures with construction to remain and at regular intervals, using power-driven saw, then remove concrete between saw cuts.

4. Masonry: Where selective demolition is required, demolish in small sections. Cut masonry at junctures with construction to remain, using power-driven saw, and then remove masonry between saw cuts.

5. Concrete Slabs-On-Grade: Excluding basement slabs-on-grade, saw-cut perimeter of area to be demolished and then break up and remove.

6. Roofing: Where selective demolition is required, remove no more existing roofing than can be covered in one day by new roofing.

7. HVAC: Remove equipment without releasing refrigerants.

3.6 BLASTING

1. General: Blasting will not normally be allowed. If permission to blast is granted following a written request, blasting shall be performed in compliance with the OSHA Safety and Health Regulations for Construction - Subpart U, The Virginia Statewide Fire Prevention Code, and all amendments or revisions thereof. Damage of any nature resulting from blasting operations shall be satisfactorily corrected by the CONTRACTOR at no expense to the AUTHORITY.

3.7 PATCHING AND REPAIRS

1. General: Promptly repair damage to adjacent construction caused by selective demolition operations.

2. Excavations: Upon removal of debris, promptly fill all excavations to prevent the accumulation of water.

3.8 DISPOSAL OF DEMOLISHED MATERIALS

1. General: Rubbish and debris shall be removed from the site daily unless otherwise directed.

2. Burning: Do not burn demolished materials.

3. Disposal: Transport demolished materials off AUTHORITY'S property and legally dispose of them.

END OF SECTION

SECTION 03 30 00 - CAST-IN-PLACE CONCRETE

PART 1 GENERAL

1.1 DESCRIPTION

1. Work Included: Provide cast-in-place concrete, including formwork, reinforcement, and finishes, where shown on the Plans, as specified herein, and as needed for a complete and proper installation.

2. Related Sections: Additional Sections of the Documents which are referenced in this Section include:

   1) Section 01 33 00 – Submittal Procedures

   2) Section 01 66 00 – Product Delivery, Storage, and Handling

   3) Section 03 41 00 – Precast Structural Concrete

   4) Section 33 03 00 – Utility Pipe and Materials

   5) Standard Detail MS-1

1.2 REFERENCES

1. General: The work shall comply with the most recent standards or tentative standards as published at the date of the contract and as listed in this specification using the abbreviation shown.

2. American Concrete Institute (ACI):

   1) 301 Specifications for Structural Concrete

   2) 306R Guide to Cold Weather Concreting

   3) 308R Guide to External Curing of Concrete

   4) 315 Details and Detailing of Concrete Reinforcement

   5) 318 Building Code Requirements for Structural Concrete and Commentary

   6) 347R Guide to Formwork for Concrete

   7) 350 Code Requirements for Environmental Engineering Concrete Structures and Commentary

3. American Society for Testing and Materials (ASTM):

   1) A185 Standard Specification for Steel Welded Wire Reinforcement, Plain, for Concrete

   2) A615 Standard Specification for Deformed and Plain Carbon-Steel Bars for Concrete Reinforcement

   3) C29 Standard Test Method for Bulk Density (“Unit Weight”) and Voids in Aggregate

   4) C33 Standard Specification for Concrete Aggregates

   5) C39 Standard Test Method for Compressive Strength of Cylindrical Concrete Specimens

6) C94 Standard Specification for Ready-Mixed Concrete

7) C150 Standard Specification for Portland Cement

8) C172 Standard Practice for Sampling Freshly Mixed Concrete

9) C193 Standard Specification for Precast Concrete Water and Wastewater Structures

10) C260 Standard Specification for Air-Entraining Admixtures for Concrete

11) C494 Standard Specification for Chemical Admixtures for Concrete

12) C1116 Standard Specification for Fiber-Reinforced Concrete

13) D448 Standard Classification for Sizes of Aggregate for Road and Bridge Construction

14) D1751 Standard Specification for Preformed Expansion Joint Filler for Concrete Paving and Structural Construction (Nonextruding and Resilient Bituminous Types)

4. Virginia Department of Transportation (VDOT) Road and Bridge Specifications:

   1) 217 Hydraulic Cement Concrete

5. Concrete Reinforcing Steel Institute (CRSI):

   1) CRSI Manual of Standard Practices

1.3 SUBMITTALS

1. General: Shall be in accordance with Section 01 33 00 – Submittal Procedures.

2. Mix Designs:

   1) Within 30 calendar days after award of the Contract, and prior to proceeding with any concrete work, CONTRACTOR shall secure concrete mix designs from the concrete supplier, and submit to the AUTHORITY for review and approval.

   2) Distribute approved mix designs to testing laboratory, batch plant, job site, and governmental agencies having jurisdiction.

3. Steel Reinforcement Shop Drawings: Details of fabrication, bending, and placement shall be prepared in accordance with ACI 315 and CRSI Manual of Standard Practices. Include material, grade, bar schedule, bent bar diagrams, and supports for reinforcement. Include special reinforcement required for openings through concrete structures.

1.4 QUALITY ASSURANCES

1. Contractor Responsibilities:

   1) Use adequate numbers of skilled workmen who are thoroughly trained and experienced in the necessary crafts and who are completely familiar with the specified requirements and the methods needed for proper performance of the work of this Section.

   2) Provide access for, and cooperate with, the AUTHORITY and testing laboratory.

3) Do not commence placement of concrete until mix designs have been reviewed and approved by the ENGINEER and all governmental agencies having jurisdiction, and until copies of the approved mix designs are at the job site and the batch plant.

2. Batch Tickets: Batch tickets shall be provided for each truck of concrete delivered to the job site. Tickets shall include the following information:

1) Concrete Company

2) Date

3) Batch Number

4) Mix Design Identifier

5) Quantity of Batch

6) Time the Cement was injected into the mix

7) Water Withheld at the Plant (if any)

8) Water Added at Jobsite (if any)

9) Admixtures (names and quantities) Injected at Plant

10) Time of Truck's Departure from the Plant

11) Driver's Name

3. An Independent Testing Agency shall be designated prior to the preconstruction conference, to provide quality assurance testing prior to placement, during placement, finishing and curing of concrete. The Independent Testing Agency shall be approved by the AUTHORITY. The Independent Testing Agency shall be experienced in similar work and have the necessary equipment and personnel to perform the testing and maintenance of logs required by the specifications.

4. Batch Ticket Log: A log of all batch tickets shall be kept by the Independent Testing Agency and provided to the AUTHORITY following each concrete pour. Results of field testing shall also be recorded on the Batch Ticket Log (see Table A).

1.5 DELIVERY, STORAGE, AND HANDLING

1. General: Material shall be delivered and stored so as to minimize the potential for damage to the material. The CONTRACTOR shall take special care to protect material from the elements as directed by the manufacturer. Material shall be in accordance with Section 01 66 00 – Product Delivery, Storage, and Handling.

2. Reinforcement: Reinforcing steel shall be organized and stockpiled prior to placement and kept free from mud and dirt. All bundles shall bear the fabricator's "mark number" to identify ultimate location/use of the bars when accompanied by the placement drawings.

PART 2 PRODUCTS

2.1 FORMS

1. General: All formwork shall comply with ACI 347R.

2. Design and Construction:

   1) Design, erect, support, brace, and maintain formwork so it will safely support vertical and lateral loads which might be applied until such loads can be supported safely by the concrete structure.

   2) Construct forms to the exact sizes, shapes, lines, and dimensions shown, and as required to obtain accurate alignment, location, grades, and level and plumb work in the finished structure.

2.2 STEEL REINFORCEMENT

1. General: Reinforcement materials and installation shall conform to the applicable sections of the latest version or revision of ACI 301, except as modified by the Supplemental Requirements listed below.

2. Strength: Reinforcement shall be of the size shown on the plans with all bars being billet steel. Welded wire fabric gauge and mesh size shall be as shown on the plans.

3. Spacing: The clear distance between parallel bars shall not be less than 1-1/3 times the maximum size of the coarse aggregate. All main reinforcement shall be spaced not less than 2 inches from any concrete surface unless authorized or indicated on the plans. Clearance between ground and rebar shall be a minimum of 3 inches. For stirrups, spacer rods and similar secondary reinforcement, this clearance may be reduced by the diameter of such rods.

4. Splicing: Where splicing of bars is necessary, the minimum length of the splice shall be 30 diameters of the largest bar, unless shown to be otherwise on plans.

5. Hooks and Bends: When a hook is indicated on the plans, it shall mean either a 180 degree turn plus an extension of at least 4 bar diameters, or a 90 degree turn plus an extension of at least 6 bar diameters.

6. Quality Assurance: Comply with the following as minimums:

   1) Bars: ASTM A615, grade 60 unless otherwise shown on the plans using deformed bars for number 3 and larger.

   2) Welded wire fabric: ASTM A185.

   3) Bending of rebar shall be in accordance with ACI 318.

   4) Supports for reinforcement: Supports for reinforcing bars and welded wire fabric shall comply with CRSI Manual of Standard Practices recommendations, including bolsters, chairs and spacers. Wire bar supports shall be rust protected in accordance with CRSI Class 2. Under no circumstances will rebar or other metal pins driven into the ground to support reinforcing steel be allowed.

   5) Reinforcement: Do not use reinforcement having any of the following defects:

      a) Bar lengths, depths, or bends exceeding the specified fabricating tolerances.

      b) Bends or kinks not indicated on the plans or required for this work.

      c) Bars with cross-section reduced due to excessive rust or other causes.

   6) Reinforcement shall be fabricated by the supplier to the required shapes and dimensions, within fabrication tolerances stated in the CRSI “Manual of Standard Practices” and ACI 315.

2.3 FIBER REINFORCEMENT

1. General: Reinforcement materials shall be glass fiber or fibrillated, twisted bundle form fibers designed specifically to be compatible with the aggressive alkaline environment of Portland cement based composites. Installation shall conform to the applicable sections of the latest version or revision of ASTM C 1116, except as modified by these specifications.

2. Mix Designs: Fiber reinforcement should be mixed to 1/5-10% (dewatering may be necessary for achieving percentages over 6%) content per total volume and conform to the requirements of ASTM C1116.

3. Strength: Reinforcement shall be designed to meet the requirements of ASTM C1116.

4. Quality Assurance: Comply with the following as minimums:

   1) Reinforcement shall be fabricated by the supplier to the required shapes and dimensions, within fabrication tolerances stated in ASTM C1116.

2.4 CONCRETE

1. General: Concrete work shall conform to all requirements of ACI 301 and ACI 350, except as modified by supplemental requirements below. The CONTRACTOR shall provide at the construction site all ACI specifications referenced herein. Concrete used for shaping of manhole channels, sidewalk and miscellaneous work shall meet the requirements of VDOT Section 217, Class A3.

2. Strength: Concrete shall have a minimum allowable compressive strength specified at 28 days (ACI 301, 4.2.2.8). Concrete shall reach a minimum of 80 percent of this design strength before weight supporting forms may be removed (ACI 301, 2.3.4.1 and 2.3.4.2). Earlier removal of non-load bearing forms shall be permitted only if approved by the AUTHORITY.

3. Admixtures: Admixtures may be used to enhance concrete handling, workability and strength characteristics if approved by the ENIGNEER prior to use, and meet the requirements of ACI 301, 4.2.1.4. The AUTHORITY shall be notified of any admixtures proposed for use at least two weeks prior to placement of concrete.

   Provide admixtures that contain not more than 0.1 percent chloride ions.

   1) Use air-entraining admixture per ASTM C260 in exterior exposed concrete, providing not less than 4.5 percent or more than 7 percent entrained air for concrete exposed to freezing and thawing and from 2 percent to 4 percent for other concrete.

   2) Use water-reducing, accelerating, and retarding admixtures per ASTM C494 that have been tested and accepted in mix designs in strict compliance with manufacturer’s directions.

4. Watertight Concrete: All concrete used in the construction of this project shall be considered as watertight concrete with water-cement ratios and other parameters not exceeding those specified for watertight concrete (ACI 301, 3.4.2) unless indicated to be otherwise on the plans.

5. Forms: Shop plans for formwork shall not be required (ACI 301).

6. Materials and Testing: CONTRACTOR shall comply with the following as minimums:

   1) Portland cement: 4,000 psi ASTM C 150, Type I or II.Low alkali cement shall be used where aggregates are alkali reactive.

2) Aggregate, shall meet requirements of ASTM C33 and be uniformly graded and clean. Aggregate shall be tested in accordance with ASTM C29. Do not use aggregate known to cause excessive shrinkage.

3) Aggregate, coarse: Crushed rock or washed gravel with minimum size between 3/4 inch and 1-1/2 inch, and with a maximum size of 2 inch.

4) Aggregate, fine: Natural washed sand of hard and durable particles varying from fine to particles passing a 3/8 inch screen, of which at least 12 percent shall pass a 50 mesh screen.

5) Provide concrete with compressive strengths shown on the plans. When such strengths are not shown on the plans, provide the following as minimums:

Concrete footings	3000 psi
Concrete anchors / encasement	3000 psi
Bond beams	4000 psi
Watertight Structures	4000 psi
Sidewalks	3000 psi
Structural Concrete	4000 psi

6) Slump Limits: Design mixes shall result in concrete slump at point of placement of not less than 2 inches and not more than 4 inches. If the approved mix design includes the use of admixtures which affect slump, slump at point of placement shall comply with mix design.

2.5 OTHER MATERIALS

1. Incidentals: Provide other materials, not specifically described, but required for a complete and proper installation, as selected by the CONTRACTOR subject to the approval of the AUTHORITY.

2. Waterstops: Waterstops shall be PVC or neoprene and of sufficient size to insure proper anchorage into both adjacent pours. Waterstop shall be ribbed with center bulb shape for use in both construction and expansion joints.

3. Joint Filler: Joint filler shall be a premolded expansion joint filler complying with ASTM D1751.

4. Pipe Connections: Pipes connection materials in accordance with Section 33 03 00 – Utility Pipe and Materials.

5. Steps: Steps shall be in accordance with Standard Detail MS-1.

PART 3 EXECUTION

3.1 SURFACE CONDITIONING

1. Contractor's Responsibility: Examine the areas and conditions under which work of this Section will be performed. Correct conditions detrimental to timely and proper completion of the Work. Do not proceed until unsatisfactory conditions are corrected.

3.2 SUBBASE

1. General: A subbase of 6 inches of ASTM D448 #57 stone shall be placed under all slabs, unless otherwise indicated on the plans.

3.3 REINFORCING

1. Installation: Comply with the following, as well as the specified standards, for details and methods of reinforcing placement and supports.

    1) Clean reinforcement and remove loose dust and mill scale, earth, and other materials which reduce bond or destroy bond with concrete.

    2) Position, support, and secure reinforcement against displacement by forms, construction, and the concrete placement operations.

    3) Place reinforcement to obtain the required coverages for concrete protection as specified by ACI 301.

    4) Install welded wire fabric in as long lengths as practicable, lapping adjoining pieces one full mesh minimum.

    5) Dowels shall match reinforcement with which they lap unless noted.

    6) Unless otherwise shown on the plans, or required by governmental agencies having jurisdiction, or mechanical lap type splices are used, overlap bars per paragraph 2.2.4 (splicing) of this specification. Mechanical lap devices shall be approved by the AUTHORITY prior to use.

    7) Do not field bend reinforcement without written permission of the AUTHORITY. In no case may bars be heated to facilitate bending.

    8) Welding, oxy-acetylene torch cutting, or the application of heat to reinforcing steel, anchor bolts, or any metal object embedded in concrete is strictly forbidden unless approved in writing by the AUTHORITY.

3.4 EMBEDDED ITEMS

1. Location:

    1) Do not embed conduit or piping in structural concrete.

    2) Set bolts, post bases, inserts, and other required items in the concrete, accurately secured so they will not be displaced, and in the precise locations needed.

2. Pipe Connections: Install pipe connection sleeves and gaskets in accordance with manufacturer's written recommendations.

3. Steps: Install steps in accordance with 03 41 00 – Precast Structural Concrete.

3.5 FOOTING

1. General: Footing depth and construction shall be as shown on the plans. Bottoms of all exterior footings shall be adequately drained before foundation concrete is placed.

3.6 MIXING CONCRETE

1. Requirements:

   1) Transit mix the concrete in accordance with provisions of ASTM C94.

   2) Mixing Water:

      A maximum of 2-1/2 gallons of water per cubic yard of concrete, may be withheld at the batch plant.

      Upon arrival at the job site, add all or part of the withheld water (as required for proper slump) before the concrete is discharged from the mixer.

      Mix not less than five minutes after the withheld water has been added, and not less than one minute of that time immediately prior to discharge of the batch.

      Unless otherwise directed, provide at least 15 minutes total mixing time per batch after first addition of water.

   3) Each batch of concrete shall be delivered to the site of work and discharged within the allotted time. The allotted time will begin the instant the cement is introduced into the mixture. Times given for retarded concrete are provided to accommodate the physical limitations of a formed section or scattered locations of small increment placements and shall not be used to accommodate slow and non-continuous placements caused by poor planning or scheduling, inadequate equipment or personnel, or excessive haul distances.

   4) Do not use concrete that has stood for over 30 minutes after leaving the mixer. The elapsed time between introduction of cement to the mix and completion of the discharge from an agitator type truck shall not exceed the following times (in hours)*:

Concrete Temperature	Retarded Mix	Un-retarded Mix
Up to 80° F	2½	1½
80° – 90° F	2	1¼
Above 90° F	1½	1

(*Reference VDOT 217.09, based on Agitator Type Haul Equipment)

   5) Plasticizers or other admixtures shall not be used unless prior approval from the AUTHORITY has been obtained.

   6) Ready-mixed concrete shall be delivered to the designated point ready for use.

   7) Each load of transit or shrink-mixed concrete shall be accompanied by Form TL-28 issued by the batcher or technician. The form shall be delivered to the Inspector at the site of the work. Loads that do not carry such information or that do not arrive in satisfactory condition shall not be used.

      Upon cessation of mixing for more than 30 minutes, the mixer shall be thoroughly cleaned.

3.7 PLACING CONCRETE

1. Preparation:

   1) Remove foreign matter accumulated in the forms.

   2) Rigidly close openings left in the formwork.

3) Wet wood forms sufficiently to tighten up cracks. Wet other material sufficiently to maintain workability of the concrete.

4) Use only clean tools.

5) Masonry wall shall be sufficiently wet to maintain workability of the concrete.

2. Conveying:

1) Perform concrete placing at such a rate that concrete which is being integrated with fresh concrete is still plastic.

2) Deposit concrete as nearly as practicable in its final location so as to avoid separation due to handling and flowing.

3) Do not use concrete which becomes non-plastic and unworkable, does not meet required quality control limits, or has been contaminated by foreign materials.

4) Remove rejected concrete from the job site.

3. Placing Concrete for Walls:

1) Concrete shall be deposited and consolidated in horizontal layers not deeper than 24 inches in a continuous operation.

2) Placing shall be carried on at such rate that the concrete which is being integrated with fresh concrete is still plastic.

3) Temporary spreaders in forms shall be removed when concrete has reached the elevation of the spreaders.

4. Placing Concrete Slabs:

1) Deposit and consolidate concrete slabs in a continuous operation.

2) Bring slab surfaces to the correct level with a straightedge, and then strike off.

3) Use bull floats or darbies to smooth the surface, leaving the surface free from bumps and hollows.

4) Do not sprinkle water on the plastic surface. Do not disturb the slab surface prior to start of finishing operations.

5. Cold Weather Placement:

1) All concrete work shall be protected from damage or reduced strength which could be caused by freezing actions or low temperatures. All work with concrete mixture when air temperature is below 40 degrees F shall comply with ACI 306R and as specified herein.

2) Do not use antifreeze agents or chemical accelerators, unless written approval for such use has been given by the AUTHORITY.

3) Do not use aggregates that contain ice or snow. Do not place concrete over frozen soils or subgrade.

4) If air temperatures have fallen below 40 degrees F, or are expected to fall below 40 degrees F within twenty-four hours, heat water and all aggregates before mixing. Concrete mixture temperature at point of placement shall not be less than 60 degrees F nor more than 80 degrees F.

3.8 CONSOLIDATION

1. General:

   1) Consolidate each layer of concrete immediately after placing, by use of internal concrete vibrators supplemented by hand spading, rodding, or tamping.

   2) Do not vibrate forms or reinforcement.

   3) Do not use vibrators to transport concrete inside the forms.

3.9 CONCRETE CURING

1. General: Concrete curing shall be done with accordance with ACI 308R. Cold weather curing shall be in accordance with ACI 306R.

3.10 JOINTS

1. Expansion Joints: Expansion joints are to be provided at locations shown on the plans or at other locations during construction as approved by the AUTHORITY. Joints shall be filled with a premolded expansion joint filler complying with ASTM D1751.

2. Construction Joints: Construction joints shall be provided as shown on the plans or as preapproved by the AUTHORITY. Joints shall be kept free of form oil or other materials which may hamper bonding. Soiled surfaces shall be washed, mechanically cleaned or brushed blasted to the satisfaction of the AUTHORITY. A surface bonding agent similar to Larsen Products “Weld Crete” shall be applied at all joints in accordance with the manufacturer's recommendation.

   1) Do not use construction joints except as shown on the plans.

   2) If additional construction joints are found to be required, secure the AUTHORITY's approval of joint design and location prior to start of concrete placement.

3. Waterstops: Waterstops shall be installed at all joints shown and all construction joints used by the CONTRACTOR in placing the concrete. Waterstops shall be anchored securely in place by using split forms, tie wires, or other methods that will insure correct positioning and proper embedment of the waterstop while the concrete is being placed. Concrete shall be thoroughly vibrated around the waterstop to avoid honey combing and insure proper bonding to the waterstop.

3.11 CONCRETE FINISHING

1. General: All exposed concrete surfaces shall receive as a minimum, a smooth rubbed or grout cleaned finish conforming to ACI 301. Alternative methods of finishing concrete, such as an application of a concrete finish/sealer such as Thoroseal or similar product, shall be acceptable if approved by the AUTHORITY. Except as may be shown otherwise on the plans provide the following finishes at the indicated locations.

   1) Float Finish: apply to footings

   2) Trowel Finish: apply to bond beams and other surfaces that are to be exposed to view, unless otherwise shown

3) Non-slip Broom Finish: apply to walks

2. Slabs: Concrete slabs shall be finished in accordance with ACI 301. 11 with floors receiving a trowled finish and exterior slabs to receive a broom finish.

3.12 REMEDIAL WORK

1. General: Repair or replace deficient work as directed by the AUTHORITY'S Project Inspector and at no additional cost to the AUTHORITY.

3.13 TESTING

1. General: The CONTRACTOR shall provide the qualifications of proposed materials and mix designs and other services specifically required of the CONTRACTOR. Testing services shall include at a minimum those tests listed below. Offsite testing services shall be performed by the same Independent Testing Agency performing the initial onsite testing services.

2. Tools and Materials: The Independent Testing Agency shall provide the cylinder molds, tools, and labor necessary to prepare the test specimens and deliver them to the laboratory. The CONTRACTOR shall prepare the site for field curing of test specimens prior to delivery to the Independent Testing Agency for compressive strength testing of cylinders.

3. Routine Testing: Testing of concrete shall be performed according to the following requirements:

   1) Slump: On each transit truck batch until measured slump is consistent with specifications and every fourth transit truck batch thereafter. Perform additional tests when concrete consistency appears to change.

   2) Air Content: With each slump test.

   3) Concrete Temperature: With each Slump and Air Content test.

   4) Compression Test Specimens: Cast and field cure one set of four standard cylinder specimens for each 50 cubic yards or fraction thereof. Compression Test specimens shall be formed from composite samples taken in accordance with ASTM C172.

   5) Compressive Strength Tests: Compressive strength tests shall be conducted on field cured test specimens in accordance with ASTM C39.

   NOTE: Concrete not within the specified limits of slump, air content, and temperature shall not be used in the work.

   The strength of concrete will be considered satisfactory when the average of all sets of three consecutive compressive strength test results equal or exceeds the specified compressive strength and no individual strength test result falls below the specified compressive strength by more than 500 psi.

4. Additional Testing: In addition to performing routine testing, the Independent Testing Agency personnel shall:

   1) Upon request of the AUTHORITY or AUTHORITY's Project Representative, immediately conduct tests on questionable concrete to determine if the quality of the concrete is in strict conformance with the Concrete Mix Design and the Specifications. The results of these tests shall be recorded in the log.

2) Perform additional testing of materials or concrete occasioned by their failure by test or inspection to meet the specification requirements or changes in materials or proportions requested by the CONTRACTOR.

If non-conforming concrete has been placed in a structure, it shall be removed immediately and replaced with conforming concrete.

5. Other Testing: CONTRACTOR may have additional testing performed for the convenience of the CONTRACTOR. These tests shall be at the CONTRACTOR'S expense. These tests shall be performed by the Independent Testing Agency approved by the AUTHORITY for the project.

TABLE A
BATCH TICKET LOG

Date	Batch No. or Ticket No.	Quantity (CY)	Truck Plant Departure Time	Truck Jobsite Arrival Time	Begin Batch Placement Time	End Batch Placement Time	Slump (Inches)	Temperature (ºF)	Air Content (%)	Additives Added At Jobsite Type/Quantity	Test Cylinders Taken (Yes/No)	A-Accept or R-Reject

END OF SECTION

SECTION 03 41 00 –PRECAST STRUCTURAL CONCRETE

PART 1 GENERAL

1.1 DESCRIPTION

1. Work Included: Installation of all precast concrete structures as shown on the plans.

2. Related Sections: Additional Sections of the Documents which are referenced in this Section include:

   1) Section 01 33 00 – Submittal Procedures

   2) Section 01 66 00 – Product Delivery, Storage, and Handling Requirements

   3) Section 03 30 00 – Cast-in-Place Concrete

   5) Section 33 03 00 – Utility Pipe and Materials

   6) Section 33 10 00 – Water Utilities

   7) Section 33 30 00 – Sanitary Sewerage Utilities

1.2 REFERENCES

1. General: The work shall comply with the most recent standards or tentative standards as published at the date of the contract and as listed in this specification using the abbreviation shown.

2. American Association of State Highway and Transportation Officials Publications (AASHTO):

   1) H-17 Standard Specifications for Highway Bridges

   2) M 306 Standard Specification for Drainage, Sewer, Utility, and Related Castings

   3) M 105 Standard Specification for Gray Iron Castings

3. American Concrete Institute Publications (ACI):

   1) 304R Guide for Measuring, Mixing, Transporting, and Placing Concrete

   2) 318 Building Code Requirements for Structural Concrete and Commentary

   3) 350 Code Requirements for Environmental Engineering Concrete Structures

4. American Society for Testing and Materials (ASTM):

   1) A185 Standard Specification for Steel Welded Wire Reinforcement, Plain, for Concrete

   2) A497 Standard Specification for Steel Welded Wire Reinforcement, Deformed, for Concrete

   3) A615 Standard Specification for Deformed and Plain Carbon-Steel Bars for Concrete Reinforcement

   3) C33 Standard Specification for Concrete Aggregates

4) C42 Standard Test Method for Obtaining and Testing Drilled Cores and Sawed Beams of Concrete

5) C94 Standard Specification for Ready-Mix Concrete

6) C150 Standard Specification for Portland Cement

7) C260 Standard Specification for Air-Entraining Admixtures for Concrete

8) C404 Standard Specification for Aggregates for Masonry Grout

9) C443 Standard Specification for Joints for Concrete Pipe and Manholes, Using Rubber Gaskets

10) C478 Standard Specification for Circular Precast Reinforced Concrete Manhole Sections

11) C494 Standard Specification for Chemical Admixtures for Concrete

12) C857 Standard Practice for Minimum Structural Design Loading for Underground Precast Concrete Utility Structures

13) C877 Standard Specification for External Sealing Bands for Concrete Pipe, Manholes, and Precast Box Sections

14) C923 Standard Specification for Resilient Connectors between Reinforced Concrete Manhole Structures, Pipes, and Laterals

15) C990 Standard Specification for Joints for Concrete Pipe, Manholes, and Precast Box Sections Using Preformed Flexible Joints Sealants

16) D448 Standard Classification for Sizes of Aggregate for Road and Bridge Construction

17) D1227 Standard Specification for Emulsified Asphalt Used as a Protective Coating for Roofing

5. Concrete Reinforcing Steel Institute (CRSI):

1) CRSI Manual of Standard Practices

6. National Science Foundation (NSF)

1) NSF 61 Drinking Water System Components – Health Effect

7. Prestressed Concrete Institute Publications (PCI):

1) MNL-116 Manual for Quality Control for Plants and Production of Precast Prestressed Concrete Products

6. Virginia Department of Transportation - Road and Bridge Specifications (VDOT):

1) 217 Hydraulic Cement Concrete

2) 224 Castings

1.4 SUBMITTALS

1. General: Shall be in accordance with Section 01 33 00 - Submittal Procedures.

2. Product Data: Submit manufacturer's specifications and instructions for manufactured materials and products. Include manufacturer's certifications and laboratory test reports as required.

3. Shop Drawings: Submit shop drawings showing complete information for fabrication and installation of precast concrete units. Indicate member dimensions and cross-section; location, size and type of reinforcement, including special reinforcement and lifting devices necessary for handling and erection.

4. Design Mixes for Cement Grout and Mortar Materials: Submit design mixes for all cement mortar and grout mixtures to be utilized in construction or repairs.

1.5 QUALITY ASSURANCE

1. Fabricator Qualifications: Fabricator must have sufficient production capacity to produce required units without causing delay in work. Precast units shall be designed, fabricated, and erected by a firm having a minimum of 5 years experience in the manufacturing of precast units of a similar arrangement, using a precast design. Upon request, the manufacturer shall document the installation of a minimum of ten (10) such functioning facilities.

2. Design by Fabricator: Design precast units for all dead loads and live loads as indicated and as required for compliance with applicable Building Code requirements. Walls shall be designed for water and soil pressure using water height at the grade elevation shown on the plans. If hydrostatic uplift forces exist when the tank is empty, the Designer (Fabricator) shall provide for necessary hold-down items. The CONTRACTOR shall furnish and install hold-down items, if they are required.

3. Fabrication Qualifications: Produce precast concrete units at fabricating plant engaged in manufacturing of similar units, unless plant fabrication or delivery to project site is impractical.

4. Inspections: The quality of all materials, the process of manufacture, and the finished sections shall be subject to inspection and approval by the AUTHORITY. The materials shall be subject to rejection at any time on account of failure to meet any of the Specifications requirements. Material rejected after delivery to the job shall be marked for identification and shall be removed from the job. All materials damaged after delivery will be rejected, and if already installed, shall be acceptably repaired, if permitted, or removed and replaced, at no additional cost to the AUTHORITY.

5. Approved Products List: The CONTRACTOR shall consult the AUTHORITY'S Approved Products List for acceptable materials and equipment.

1.6 DELIVERY, STORAGE, AND HANDLING

1. General: Comply with pertinent provision of Section 01 66 00 – Product Delivery, Storage, and Handling Requirements.

2. Delivery: Items delivered and installed at the site shall be structurally sound and free from cracks or major surface blemishes. Deliver precast units to project site in such quantities and at such times to assure continuity of installation. Store units at project site to prevent cracking, distortion, staining, or other physical damage, and so that markings are visible. Lift and support units only at designated points. Deliver anchorage items which are to be embedded in other construction before start of such work. Provide setting diagrams, templates, instructions and directions as required for installation.

PART 2 PRODUCTS

2.1 MATERIALS

1. General: Concrete and reinforcing materials shall comply with Section 03 30 00 – Cast-in-Place Concrete except as modified by this Section.

2. Reinforcing Materials:

   1) Reinforcing Bars: ASTM A615, Grade 60 unless otherwise indicated

   2) Welded Wire Fabric: ASTM A185

   3) Welded Deformed Steel Wire Fabric: ASTM A497

   4) Supports for Reinforcement: Provide supports for reinforcement including bolsters, chairs, spacers and other devices for spacing, supporting and fastening reinforcing, complying with CRSI Manual of Standard Practices.

      a) For exposed-to-view concrete surfaces, where legs of supports are in contact with forms, provide supports with legs which are plastic protected (CRSI, Class 1) or stainless steel protected (CRSI, Class 2).

3. Concrete Materials:

   1) Portland Cement: ASTM C150, Type II

      a) Compression Strength: 5000 psi @ 28 days

      b) Slump: 4 inch maximum unless water reduction admixtures used

      c) Use only one brand and type of cement throughout project, unless otherwise acceptable to the AUTHORITY.

   2) Aggregates: ASTM C33, and as herein specified. Provide aggregates from a single source for exposed concrete.

   3) Water: Potable

   4) Air-Entraining Admixture: ASTM C260

   5) Water-Reducing Admixture: ASTM C494, Type A, or other type approved for fabricator's units.

4. Proportioning and Design of Mixes:

   1) Prepare design mixes for each type of concrete required.

   2) Design mixes may be prepared by independent testing facility or by qualified precast manufacturing plant personnel, at precast manufacturer's option.

   3) Proportion mixes by either laboratory trail batch or field experience methods, using materials to be employed on the project for each type of concrete required, complying with ACI 318.

      a) Produce standard-weight concrete consisting of specified Portland cement, aggregates, admixtures, and water to produce the following properties.

      b) Compressive strength; 5000 psi minimum at 28 days. Release strength for prestressed units: 2500 psi.

      c) Cure compression test cylinders using same methods as used for precast concrete work.

4) Admixtures:

a) Use air-entraining admixture in concrete.

b) Use water-reducing admixtures in strict compliance with manufacturer's directions. Admixtures to increase cement dispersion, or provide increased workability for low-slump concrete, may be used subject to AUTHORITY'S approval.

c) Use crystalline waterproofing admixture for all water holding tanks in strict accordance with manufacturer's directions. Waterproofing admixture shall be compliant with NSF 61.

d) Use amounts as recommended by admixture manufacturer for climatic conditions prevailing at time of placing. Adjust quantities of admixtures as required to maintain quality control.

5. Steps: Steps shall be in accordance with Standard Detail MS-1.

6. Pipe Connections: Pipe-to-Concrete Structure Connections shall be in accordance with Section 33 03 00 – Utility Pipe and Materials.

7. Grout Materials: Cement Grout: Portland cement, ASTM C150, Type I, II, or III and clean, natural sand, ASTM C404. Mix at ratio of 1.0 part cement to 3.0 parts sand, by volume, with minimum water required for placement and hydration.

8. Cement Mortar: Cement mortar used for repairs shall have a minimum compressive strength of 4,000 psi at 7 days and 5,000 psi at 28 days, when tested in 3-inch by 6-inch cylinders stored in the standard manner.

9. Ready-Mix Concrete: Comply with requirements of ASTM C94, and as herein specified.

1) Delete references for allowing additional water to be added to batch for material with insufficient slump. Addition of water to batch will not be permitted, unless batch plant ticket indicates amount of water withheld.

2) When the air temperature is between 85 degrees F (30 degrees C) and 90 degrees F (32 degrees C), reduce mixing and delivery time from 1-1/2 hour to 75 minutes and when air temperature is above 90 degrees F (32 degrees C), reduce mixing and delivery time to 60 minutes.

2.2 FABRICATION

1. General: Fabricate precast concrete units complying with manufacturing and testing procedures, quality control recommendations, and dimensional tolerances of PCI MNL-116, and as specified for types of units required.

2. Built-in Anchorages: Accurately position built-in anchorage devices and secure to form work. Locate anchorages where they do not affect position of main reinforcement or placing of concrete.

3. Steps: Steps shall be positioned in accordance with Standard Detail MS-1.

4. Forms: Coat surfaces of forms with bond-breaking compound before reinforcement is placed. Provide commercial formulation form-coating compounds that will not bond with, stain, or adversely affect concrete surfaces, and will not impair subsequent treatments of concrete surfaces requiring bond or adhesion. Apply in compliance with manufacturer's instructions.

5. Reinforcing:

   1) Clean reinforcement of loose rust and mill scale, earth and other materials which reduce or destroy bond with concrete.

   2) Accurately position, support and secure reinforcement against displacement by form work, construction, or concrete placement operations. Locate and support reinforcing by metal chairs, runners, bolsters, spacers and hangers, as required.

   3) Place reinforcement to obtain at least the minimum coverage for concrete protection. Arrange, space and securely tie bars and bar supports to hold reinforcement in position during concrete placement operations. Set wire ties so ends are directed into concrete, not toward exposed concrete surfaces.

6. Fabrication:

   1) Place concrete in a continuous operation to prevent formation of seams or planes of weakness in precast units, complying with requirements of ACI 304R. Thoroughly consolidate placed concrete by internal and external vibration without dislocation or damage to reinforcement and built-in items.

   2) Curing by low-pressure steam, by steam vapor, by radiant heat and moisture, or other similar process may be employed to accelerate concrete hardening and to reduce curing time.

7. Identification: Provide permanent markings to identify pick-up points and orientation during erection, complying with markings indicated on final shop drawings. Imprint date of casting on each precast unit on a surface which will not show in finished structure.

8. Finishing: Provide finishes for formed surfaces of concrete as indicated for each type of unit, and as follows:

   1) Standard: Normal plant run finish produced in forms that impart a smooth finish to concrete. Small surface holes caused by air bubbles, normal form joint marks, and minor chips and spalls will be tolerated, but no major or unsightly imperfections, honeycomb, or structural defects will be permitted.

   2) Unformed Surfaces: Apply trowel finish to unformed surfaces unless otherwise indicated. Consolidate concrete, bring to proper level with straightedge, float, and trowel to a smooth uniform finish. Broom finish will not be acceptable.

9. Coordination: Coordinate with other trades for installation of items to be installed in precast units.

10. Source Quality Control:

    1) The AUTHORITY may employ a separate testing laboratory to evaluate precast manufacturer's quality control and testing methods.

    2) The precast manufacturer shall allow AUTHORITY'S testing facility access to materials storage areas, concrete production equipment and concrete placement and curing facilities. Cooperate with AUTHORITY'S testing laboratory and provide samples of materials and concrete mixes as may be requested for additional testing and evaluation.

    3) Dimensional Tolerances: Units having dimensions smaller or greater than required, and outside specified tolerance limits, will be subject to additional testing as herein specified.

4) Precast units having dimensions other than shown on the plans will be rejected if appearance or function of the structure is adversely affected, or if revised dimensions interfere with other construction. Repair, or remove and replace rejected units as required to meet construction conditions.

5) Strength of Units: The strength of precast concrete units will be considered potentially deficient if the manufacturing processes fail to comply with any of the requirements which my affect the strength of the precast units, including the following conditions.

   a) Failure to meet compressive strength tests requirements.

   b) Reinforcement not conforming to specified fabrication requirements.

   c) Concrete curing, and protection of precast units against extremes in temperature, not as specified.

   d) Precast units damaged during handling and erection.

6) Testing Precast Units: When there is evidence that strength of precast concrete units does not meet specification requirements, the concrete testing service shall take cores drilled from hardened concrete for compressive strength determination, complying with ASTM C42 and as follows:

   a) Take at least 3 representative cores from precast units of suspect strength, from locations directed by AUTHORITY.

   b) Test cores in a saturated-surface-dry condition per ACI 318 if concrete will be wet during use of completed structure.

   c) Test cores in an air-dry condition per ACI 318 if concrete will be dry during use of completed structure.

   d) Strength of concrete for each series of cores will be considered satisfactory if their average compressive strength is at least 85 percent of 28 day design compressive strength.

   e) Test results shall be made in writing on same day that tests are made, with copies to AUTHORITY, CONTRACTOR, and Precast Manufacturer. Results shall include name of concrete testing service, identification letter, name and type of member or members represented by core tests, design compressive strength, compression breaking strength and type of break (corrected for length-diameter ratio), direction of applied load to core with respect to horizontal plan of concrete as placed, and moisture condition of core at time of bearing.

7) Patching: Where core test results are satisfactory and precast units are acceptable for use in work, fill core holes solid with cement mortar, and finish to match adjacent concrete surfaces.

8) Defective Work: Precast concrete units which do not conform to specified requirements, including strength, tolerances, and finishes, shall be replaced with precast concrete units that meet requirements of this section. Contractor shall also be responsible for cost of corrections to other work affected by or resulting from correction to precast concrete work.

2.3 MANHOLES (APPURTENANCE CHAMBER)

1. Manholes for sanitary sewers are specified in Section 33 30 00 – Sanitary Sewerage Utilities. Manholes used as appurtenance chambers are specified in this section.

2. General:

   1) Manholes shall be of the eccentric design, except as shown on the plans or Standard Details.

   2) Concrete manholes shall be of precast construction. All concrete shall be rodded or vibrated to minimize honeycombing and assure water tightness.

   3) Where located in flood plains, or where the base of the manhole chamber is lower than normal groundwater elevation, exterior sealant shall be applied in accordance with Section 33 30 00 – Sanitary Sewerage Utilities.

3. Construction:

   1) Precast manholes shall conform to ASTM C478 and Standard Details as called for on the plans.

   2) Minimum inside diameter shall be 48 inches unless noted on plans, with minimum of 5 inch thick walls.

4. Manhole Steps: All manhole steps shall have a solid polypropylene shell with a steel core. Steps shall have a minimum spacing of 12 inches and a maximum spacing of 16 inches, uniformly spaced throughout the manhole structure. Steps shall conform to Standard Detail MS-1.

5. Flat slab top: All flat slab tops, when required, shall be reinforced concrete with a minimum 4500 psi at 28 days and contain welded steel wire fabric conforming to ASTM A185. Manhole appurtenance chambers located in traffic areas shall be designed in accordance with AASHTO Standard Specifications for Highway Bridges.

6. Base, when required, may be precast or cast-in-place. All precast sections shall conform to the requirements of ASTM C478. Cast-in-place concrete shall conform to Section 03 30 00 – Cast in Place Concrete.

7. Drain Lines: Drain lines, when required, shall be 4 inch Schedule 40 PVC with solvent weld joints and fittings for the vault. Floor drain shall be 6 inch cast iron grate. Floor shall be sloped to drain to grate.

8. Pipe Connections: Pipe-to-Concrete Structure Connections shall be in accordance with Section 33 03 00 – Utility Pipe and Materials.

9. Manhole Access:

   1) Manhole Frames and Covers: Refer to Section 33 30 00 Sanitary Sewerage Utilities, Manhole Frames and Covers.

   2) Access Hatch: Shall be installed as shown on plans or Standard Details.

10. Concrete: Concrete used for shaping of manholes, sidewalk, and miscellaneous work shall meet requirements of VDOT Section 217 Class A3 or C1.

11. Joints: Joints shall be as described in Part 3.2 of this Specification for joints seals with two rings of butyl rubber rope conforming to ASTM C990 or joints shall be confined rubber gaskets in accordance with ASTM C443.

12. Frame-Chimney Seals: Refer to Section 33 30 00 Sanitary Sewerage Utilities, Frame-Chimney Seals.

13. Joint Wrap: Manhole joints shall be installed with an exterior joint collar conforming to the material requirements of ASTM C877.

2.4 PRECAST UTILITY STRUCTURE OR VAULT

1. Precast concrete utility structures shall conform to ASTM C857. Lids shall be rated for traffic loads, when necessary as shown on plans, in accordance with AASHTO H-17 manual and Standard Details.

2. Precast Vault: Precast vaults shall have the same internal dimensions as those shown on the plans and must have internal walls as shown, where applicable.

3. Joints: Shall be in compliance with Part 3.3 of this Specification.

4. Access Hatch: Shall be installed as shown on plans or Standard Details. Access hatches shall have features including, but not limited to, channel frame, drain coupling, automatic hold-open arm, padlock hasp and compression spring assist lifting mechanism.

5. Drain Lines: Shall be 4 inch Schedule 40 PVC with solvent weld joints and fittings for the vault. Floor drain shall be 6 inches cast iron grate. Vault floor shall be sloped to drain to grate.

6. Steps: Polypropylene coated steps shall be provided in the vault and shall be on 16 inch centers. The first step shall be 16 inches or less from the top of the entrance hatch. Aluminum access ladder consisting of heavy duty aluminum and a configuration that is OSHA approved will also be acceptable. Ladder shall have provisions for bolting into the wall and floor of the vault using concrete anchors.

2.5 OTHER STRUCTURES

1. Wetwells: Each wetwell shall contain an access hatch at the dimensions indicated on the plans. The interiors of all wetwells shall receive a mastic or bituminous epoxy coating.

2. Precast Units: Precast units shall have the same internal dimensions as those shown on the plans and must have internal walls as shown, where applicable.

PART 3 EXECUTION

3.1 GENERAL

1. Cast in Place Concrete: Portions of the work requiring poured in place concrete shall be constructed in accordance with Section 03 30 00 – Cast-in-Place Concrete.

2. Surface Preparation: Work surfaces such as footings and slabs, on which precast units or panels are to be erected, shall be kept clean and free of dirt and debris. Soiled surfaces shall be pressure washed, and when applicable dried, prior to the application of joint sealants.

3.2 MANHOLE (APPURTENANCE CHAMBER) INSTALLATION

1. Manholes: The subgrade and bedding for the monolithic base for the precast manhole shall be prepared similar to that for pipe.

2. Manhole joints: joints shall be a double ring of butyl rubber rope caulk to form a watertight seal. Manhole frames, covers, and hatches shall also be set on a double ring of butyl rubber rope caulk. When leveling is required manhole frames shall be set level on a full bed of mortar installed to the proper grade and cured prior to the application of the butyl caulk.

3.3 PRECAST UNIT INSTALLATION

1. General: Precast units shall be installed in accordance with the manufacturer's detailed recommendations and these specifications. Any conflicts between the recommendations and the specifications shall be resolved to the satisfaction of the AUTHORITY in advance of installation.

2. Installation: Place units on prepared stone bedding as shown on the plans. Minimum bedding when not specifically noted shall be 6 inches of compacted ASTM D 448 No 68 stone. All structures shall be installed level. Shaped bottoms shall be formed with concrete as shown on the plans and shall be smooth conforming to the dimensions shown.

3. Joints: Joints shall be sealed with a double ring of butyl rubber sealant to form a watertight seal.

4. Alignment: Sections of precast units shall be installed to the correct vertical and circumferential alignment. The edges of adjoining panels shall not vary inwardly or outwardly from one another by more than 3/8 inch (9.5 mm). Tank wall penetrations and opening shall be in proper alignment and location.

3.4 INSPECTION

1. General: At the time of inspection, the materials will be carefully examined for compliance with applicable ASTM standards, these specifications, and with the approved manufacturer's drawings. All precast concrete structures shall be inspected for general appearance, dimension, 'scratch-strength', blisters, cracks, roughness, soundness, etc. The surface shall be dense and close-textured.

2. Imperfections: Imperfections may be repaired, subject to the approval of the AUTHORITY, after demonstration by the manufacturer that strong and permanent repairs result. Repairs shall be carefully inspected before final approval. Epoxy mortar may be utilized for repairs subject to the approval of the AUTHORITY. Cement mortar used for repairs shall have a minimum compressive strength of 4,000 psi at 7 days and 5,000 psi at 28 days, when tested in 3-inch by 6-inch cylinders stored in the standard manner.

3.5 TESTING

1. Wetwell/Tank Testing: Upon completion of construction and placement of the tank, CONTRACTOR shall test the tank using either a) water-based test or b) vacuum test.

   a) Water-based test:

      i. Fill tank to overflowing with water. The tank shall remain filled for a period of at least 24 hours to allow for absorption. After the initial period, makeup water shall be added as required and the water level recorded and measured at the end of the 48 hour period.

      ii. Tank Acceptance: There shall be no flowing water allowed through the tank walls, slab, or joints. Damp spots which glisten on the surface of the tank and spots where moisture can be picked up on a dry hand will not be allowed. Maximum allowable liquid-volume loss by measurement shall not have exceeded $1/10^{th}$ of one percent of the tank capacity per 24 hours. Testing shall be witnessed by the AUTHORITY. If the loss exceeds this amount, the AUTHORITY shall require the tank to be repaired and retested, or replaced.

3. Leak-testing is not required for manhole risers used as appurtenance chambers.

3.6 DISINFECTION

1. For potable water applications, wetwells/tanks shall be disinfected in accordance with Section 33 10 00 – Water Utilities.

3.7 COMPLETION

1. Repair: Defective work shall be repaired or replaced at no cost to the AUTHORITY. Materials and methods for repairs shall be proposed by the CONTRACTOR and approved by the AUTHORITY.

2. Tank Backfill: When backfill is required around a tank exterior, it shall be initiated only after the tank has been satisfactorily leak-tested and filled.

END OF SECTION

SECTION 31 00 00 - EARTHWORK

PART 1 GENERAL

1.1 DESCRIPTION

1. Work Included: Excavate and grade in the areas designated in the Contract Documents as shown on the grading plan and specified herein, which shall include but not be limited to, the following:

   1) Excavation and site preparation.

   2) Grading to establish subgrades for slabs, walks, pavements, gravel surfaces, and grassed areas.

   3) Excavation, filling and backfilling and compaction.

   4) Dewatering or addition of water as required.

   5) Placing of topsoil and finish grading.

2. Related Sections: Additional Sections of the Documents which are referenced in this Section include:

   1) Section 01 33 00 - Submittal Procedures

   2) Section 02 41 00 - Demolition

   3) Section 31 23 33- Trenching and Backfilling

   4) Section 32 91 19.13 – Topsoil Placement and Grading

   5) Section 32 92 19 – Seeding

1.2 REFERENCES

1. General: The work shall comply with the most recent standards or tentative standards as published at the date of the contract and as listed in this specification using the abbreviation shown.

2. American Society for Testing and Materials (ASTM):

   1) D448 Standard Classification for Sizes of Aggregate for Road and Bridge Construction

   2) D698 Standard Test Methods for Laboratory Compaction Characteristics of Soil Using Standard Effort (12,400 ft-lbf/ft (600 kN-m/m^3))

   3) D1556 Standard Test Method for Density and Unit Weight of Soil in Place by the Sand-Cone Method

   4) D1557 Standard Test Methods for Laboratory Compaction Characteristics of Soil Using Modified Effort (56,000 ft-lbf/ft^3)(2,700 kN-m/m^3)

   5) D2216 Standard Test Method for Laboratory Determination of Water (Moisture) Content of Soil and Rock by Mass

   6) D2487 Standard Practice for Classification of Soils for Engineering Purposes

7) D2937 Standard Test Method for Density of Soil in Place by the Drive-Cylinder Method (Unified Soil Classification System)

8) D4318 Standard Test Method for Liquid Limit, Plastic Limit, and Plasticity Index of Soils

9) D6938 Standard Test Method for In-Place Density and Water Content of Soil and Soil-Aggregate by Nuclear Methods (Shallow Depth)

3. Occupational Health and Safety Administration (OSHA), Standards for the Construction Industry:

   1) Subpart U Blasting and the Use of Explosives

4. Virginia Department of Housing and Community Development (DHCD):

   1) VR 394-01-6 Virginia Statewide Fire Prevention Code

5. Virginia Department of Transportation (VDOT) - Road and Bridge Specifications:

   1) 303 Earthwork

1.3 DEFINITIONS

1. Controlled Fill: Controlled fill is fill required in all areas on which final grade is not placed on original excavated soil.

2. Classified Excavation: For the purposes of payment, material shall not be classified.

3. Satisfactory / Suitable Materials: Materials classified by ASTM D2487 as GW, GP, GM, GC, SW, SP, SM, SC, ML, and CL are satisfactory as fill for overlot grading and are satisfactory in-situ. Materials shall have a minimum compacted density of 95 pounds per cubic foot and a plasticity index in excess of 15.

4. Unsatisfactory / Unsuitable Materials: Materials classified by ASTM D2487 as OL, OH, MH, CH, and PT are unsatisfactory in-situ and as fill. Unsatisfactory materials also include those materials containing roots and other organic matter, trash, debris, frozen materials, and stones larger than 6 inches.

5. Cohesionless and Cohesive Materials: Cohesive materials include materials classified as GC, SC, ML, CL, MH, and CH. Cohesionless materials include materials classified in ASTM D2487 as GW, GP, SW, and SP. Materials classified as GM and SM will be identified as cohesionless only when the minus #40 fraction has a plasticity index of zero as classified by ASTM D4318.

6. Degree of Compaction: Degree of compaction is a percentage of the maximum density obtained by the test procedure presented in ASTM D698 or ASTM D1557 as specified, as a percent of laboratory maximum density.

7. Topsoil: Material obtained from excavations, suitable for topsoils shall consist of friable clay loam, free from roots, stones, other undesirable material and shall be capable of supporting a good growth of grass.

8. Geotechnical Engineer: A representative of a commercial geotechnical testing laboratory which will be used by the CONTRACTOR to provide the required quality assurance testing.

1.5 SUBMITTALS

1. General: Submittals shall be in accordance with Section 01 33 00 – Submittal Procedures. Copies of all test results and field and office worksheets shall be furnished to the AUTHORITY within 72 hours after the tests are complete.

2. Test Reports: The testing agency shall submit following reports, in duplicate, directly to the AUTHORITY from the testing services, with copy to the CONTRACTOR.

    1) Test report on borrow material for soil classification.

    2) Field density reports and map of test location.

    3) One optimum moisture-maximum density curve for each type of soil used for controlled fill.

    4) Other reports of any testing hereinafter specified deemed necessary by the Geotechnical Engineer or requested by the AUTHORITY.

    5) A test location plan shall be included with each submittal.

1.6 QUALITY ASSURANCE

1. Geotechnical Engineer: Where fill operations are proposed, the CONTRACTOR shall retain a licensed independent Geotechnical Engineer and Test Laboratory approved by the AUTHORITY to insure that earthwork meets the requirements of the specifications for density and moisture content. The Geotechnical Engineer may be required to attend the Pre-Construction Conference.

2. Inclement Weather: When fill operations are ceased due to weather (rain, freezing, snow, etc.), construction shall not be resumed until the Geotechnical Engineer has verified soil strength has not been adversely affected. If soil strength has been decreased, the affected portion of fill shall be scarified, moistened, or dried as required and compacted to the specified density.

3. Inspection: The Geotechnical Engineer shall conduct inspections as necessary to verify that the specifications are being met for the installation of materials.

4. Coordination: The CONTRACTOR shall coordinate the work with the AUTHORITY's Project Representative by notifying the Project Representative of scheduled work in advance. The CONTRACTOR shall coordinate work with other trades whose work will be affected on the site.

5. Utilities: Prior to any excavation the CONTRACTOR shall contact Miss Utility as required and verify the locations of all utilities which may be in the area.

6. Drainage: The CONTRACTOR shall be responsible for the proper drainage of the site during construction of the project. Water shall not be allowed to accumulate in any of the excavated areas. Storm or ground water collecting on site during construction shall be removed by pumping, ditching, or other suitable means.

1.7 PROJECT CONDITIONS

1. Existing Utilities: Locate existing underground utilities in areas of work. If utilities are to remain in place, provide adequate means of protection during earthwork operations.

    1) Should uncharted, incorrectly charted, unmarked in field, or incorrectly marked in the field, piping or other utilities be encountered during excavation, CONTRACTOR shall consult utility owner immediately for directions. CONTRACTOR shall cooperate with AUTHORITY and utility

companies in keeping respective services and facilities in operation, and shall repair or arrange for repair, damaged utilities to satisfaction of utility owner.

2) CONTRACTOR shall demolish and completely remove existing underground utilities as indicated on the plans and shall coordinate with utility companies for shut-off of services if lines are active. Demolition shall be in accordance with Section 02 41 00 – Demolition.

2. Blasting: Blasting will not normally be allowed. If permission to blast is granted following a written request, blasting shall be performed in compliance with the Occupational Safety and Health Standards for the Construction Industry, Subpart U; The Virginia Statewide Fire Prevention Code VR 394-01-6; and, all amendments or revisions thereof. Damage of any nature resulting from blasting operations shall be satisfactorily corrected by the CONTRACTOR at no expense to the AUTHORITY.

3. Protection of Persons and Property: CONTRACTOR shall furnish necessary signs, barricades and temporary lighting as may be pertinent for the protection of his work, employees, the public, adjacent structures, and to guard against contingencies which might give rise to delays in the work Responsibility for preservation of trench banks and other excavated spaces and the prevention of injury to any persons or property shall rest entirely with the CONTRACTOR.

1) The CONTRACTOR shall barricade open excavations occurring as part of this work and post and operate warning lights as recommended or required by authorities having jurisdiction.

2) The CONTRACTOR shall protect structures, utilities, sidewalks, pavements, trees and other facilities from damage caused by settlement, lateral movement, undermining, washout and other potentially hazardous conditions created by earthwork operations.

3) The CONTRACTOR shall protect, maintain and restore bench marks, monuments, and other reference points affected by this work. If bench marks, monuments or other permanent reference points are displaced or destroyed, points shall be re-established and markers reset under supervision of a licensed Land Surveyor. Disturbed property irons shall be reset by a Virginia licensed Land Surveyor.

PART 2 PRODUCTS

2.1 MATERIALS

1. Materials: All fill materials shall be free from mud, refuse, construction debris, organic material, rock or gravel greater than [6 inches in any dimension, frozen or otherwise unsuitable material. Materials for fills shall be secured from excavation after rejection of any unsuitable materials. Materials from other sources may be used upon approval by the Geotechnical Engineer.

2. Borrow: Material for use in replacing undercut areas or in construction of embankments shall be approved by the Geotechnical Engineer and obtained from approved sources.

3. Rock: Rock shall be removed to a minimum depth of 12 inches below the subgrade elevation. The excavated area shall be brought up to subgrade with approved material placed and compacted as described herein. Other applicable specifications are listed in VDOT 303 concerning undercutting rock.

4. Porous Fill:

1) For areas under on grade slabs, use clean, washed gravel or crushed stone which is free of clay, vegetable matter, loam or other deleterious matter.

2) Material shall be ASTM D448 #68 stone, unless shown otherwise on the plans.

5. Unsuitable Materials: Areas that exhibit excessive pumping or that do not meet density requirements due to unsuitable material as determined by Geotechnical Engineer shall be undercut and replaced with approved material in accordance with PART 3, EXECUTION.

6. Soil Bearing Capacity: Soil underneath all footings and structures shall have a minimum bearing capacity of 2000 pounds per square foot.

PART 3 EXECUTION

3.1 TOPSOIL

1. General: Preparation and placement of topsoil shall be in accordance with Section 32 91 19.13 – Topsoil Placement and Grading.

2. Conservation of Topsoil: Topsoil shall be removed as required without contamination with subsoil and stockpiled convenient to areas for later application or at locations specified. Any surplus of topsoil from excavations and grading shall be stockpiled in location approved by the AUTHORITY. A silt fence shall be installed on the downslope side and the stockpiles seeded.

3. Placing Topsoil: On areas to receive topsoil, the compacted subgrade shall be scarified to a 2 inch depth for bonding of topsoil with subsoil. Topsoil then shall be spread evenly and graded to the elevations and slopes shown. Topsoil shall not be spread when frozen or excessively wet or dry. All areas disturbed by work in this project shall be seeded in accordance with Section 32 92 19 - Seeding.

3.2 EXCAVATION

1. Excavation: Excavation shall be unclassified. After topsoil removal has been completed, excavation of every description, regardless of material encountered, within the grading limits of the project shall be performed to the lines and grades indicated. Satisfactory excavation material shall be transported to and placed in fill areas within the limits of the work. All unsuitable material including any soil which is disturbed by the CONTRACTOR's operations and surplus material shall be legally disposed of offsite by the CONTRACTOR Excavations carried below the depths indicated, shall, except as otherwise specified, be refilled to the proper grade with satisfactory material as directed. All additional work of this nature shall be at the CONTRACTOR's expense. Excavation and filling shall be performed in a manner and sequence that will provide drainage at all times. Excavations shall be kept free from water while construction therein is in progress. If the CONTRACTOR fails to provide adequate drainage and any material becomes soft or otherwise unsuitable as a result, such material shall be removed and replaced with satisfactory on-site material or borrow material from approved sources, or shall be dried and re-compacted as directed by the Geotechnical Engineer at no additional cost to the AUTHORITY. Fill areas and slopes may be adjusted to balance earthwork quantities as approved by the AUTHORITY. Materials required for fill in excess of that produced by excavation within the grading limit shall be obtained from borrow areas at the CONTRACTOR's expense.

2. Excavation for Utilities: Trenches for underground utilities systems and drain lines shall be in accordance with Section 31 23 33 - Trenching and Backfilling.

3. Ditches, Gutters, and Channel Changes: Ditches, gutters, and channel changes shall be cut accurately to the cross sections and grades indicated. All roots, stumps, rock, and foreign matter in the sides and bottom of ditches, gutters, and channel changes shall be trimmed and dressed or removed to conform to the slope, grade, and shape of the section indicated. Care shall be taken not to excavate ditches and gutters below the grades indicated. Excessive ditch and gutter excavation shall be backfilled to grade either with compacted to specified densities material or with suitable stone or cobble to form an adequate gutter paving as directed. All ditches and gutters excavated under this section shall be maintained until final acceptance of the work. Satisfactory material excavated from ditches and channel changes shall be placed in fill areas. Unsuitable and excess material shall be disposed of in designated waste areas or as directed.

4. Unauthorized Excavation:

   1) Unauthorized excavation consists of removal of materials beyond indicated subgrade elevations or dimensions without specific instruction from the AUTHORITY or the Geotechnical Engineer.

   2) Under footings or foundations, fill unauthorized excavations by extending the indicated bottom elevation of the footing or base to the unauthorized excavation bottom, but in no way altering the required top elevation.

   3) Elsewhere, backfill and compact unauthorized excavations as specified for authorized excavations, unless otherwise directed by the Geotechnical Engineer.

5. Stability of Excavations: Maintain sides and slopes of excavations in a manner such that the excavation provides safety of personnel, protection of work, and compliance with requirements of governmental agencies having jurisdiction.

3.3 FILL

1. Preparation of Ground Surface for Fill: All vegetation such as roots, brush, heavy sods, heavy growth of grass, and all decayed vegetative matter, rubbish, and other unsatisfactory material within the area upon which fill is to be placed, shall be stripped or otherwise removed before the fill is started. In no case will unsatisfactory material remain in or under the fill area. The areas shall then be scarified to a depth of at least 6 inches, moistened or aerated as required and compacted with vibratory rollers, pneumatic rollers, sheepsfoot rollers or other mechanical means acceptable to the Geotechnical Engineer. Sloped ground surfaces steeper than one vertical to four horizontal on which fill is to be placed shall be plowed, stepped, benched, or broken up, as directed, in such manner that the fill material will bond with the existing surface. Prepared surfaces on which compacted fill is to be placed shall be wetted or dried as may be required to obtain the specified moisture content and density.

2. Fills and Embankments: Fills and embankments shall be constructed at the locations and to lines and grades indicated. The completed fill shall conform to the grading plan indicated. Approved material obtained during excavation may be used in forming required fill. Fill shall be satisfactory material and shall be free from roots or other organic material. The material shall be placed in successive horizontal layers of 8 inches in loose depth for the full width of the cross section and shall be compacted as specified. Each layer shall be compacted before the overlaying lift is placed. Moisture content of the fill or backfill material shall be adjusted by wetting or aerating as necessary to provide the moisture content specified.

   Fills: If the fill consists predominantly of rock fragments, the fill shall be constructed in accordance with VDOT 303.

3. Stone Aggregate: A layer of ASTM D 448 #68 stone shall be placed underneath concrete slabs and footings at the locations shown on the plans. Stone depth shall be 6 inches where not shown otherwise on the plans.

3.4 COMPACTION

1. Subgrade Compaction: The cut subgrade material shall be compacted to 95percent of its maximum dry density as determined by ASTM D698. The moisture content should be within +/-5 percentage points of the material's optimum as determined by ASTM D2216.

2. Compaction: Each layer of the fill shall be compacted to at least 95 percent of the maximum theoretical density as determined by ASTM D698. Moisture content shall be within +/-5 percent of optimum as determined by ASTM D2216.

3.5 FINISHED GRADES

1. General: All areas covered by the project, including excavated and filled sections and adjacent transition areas, shall be uniformly smooth-graded. The finished surface shall be reasonably smooth, compacted, and free from irregular surface changes. The degree of finish shall be that ordinarily obtainable from blade-grader operations, except as otherwise specified. Ditches and gutters shall be finished to permit adequate drainage.

2. Unsatisfactory Material: Soft or otherwise unsatisfactory material shall be replaced with satisfactory excavated material or other approved materials.

3. Finished Elevations: Low areas resulting from removal of unsuitable material or from excavation of rock shall be brought up to required grade with satisfactory materials, and the entire area shall be shaped to line, grade, and cross section and shall be compacted as specified. The surface of embankments or excavated areas for road construction or other areas on which a base course or pavement is to be placed shall vary not more than 0.10 feet from the established grade and approved cross section. Surfaces other than those to be paved shall be finished not more than 0.20 feet above or below the established grade or approved cross section.

3.6 PROTECTION

1. Site Preservation: The CONTRACTOR shall protect newly graded areas from traffic and from erosion, and any settlement or washing away that may occur from any cause, prior to acceptance, shall be repaired and grades reestablished to the required elevations and slopes. All work shall be conducted in accordance with the Erosion Control provisions of these specifications.

2. Seeding: All areas disturbed by work in this project shall be seeded in accordance with Section 32 92 19 - Seeding.

3.7 FIELD QUALITY CONTROL

1. Testing: Testing shall be the responsibility of the CONTRACTOR at no additional cost to AUTHORITY, and shall be performed by an approved independent testing laboratory qualified to perform such tests and approved by the AUTHORITY. Field Density tests conforming to ASTM D698 shall be made by the Geotechnical Engineer or his representative on each soil type found in the areas prepared to receive fill and in the soil to be used for fill. Field Density tests shall be made by the Geotechnical Engineer or his representative in accordance with ASTM D1556 or ASTM D6938 on the areas prepared to receive fill and on each layer of compacted fill. Testing shall be the responsibility of the CONTRACTOR and shall be performed at no additional cost to the AUTHORITY. When ASTM D6938 is used, the calibration curves shall be checked and adjusted if necessary by the procedure described in ASTM D6938, paragraph "ADJUSTING CALIBRATION CURVE". ASTM D6938 results in a wet unit weight of soil and when using this method, ASTM D6938 shall be used to determine the moisture gauges along with density calibration checks as described in ASTM D6938. ASTM D 2937 shall be used only for soft, fine-grained, cohesive soils. More tests shall be performed if in the judgment of the Resident Project Representative, Geotechnical Engineer, or AUTHORITY the compactive effort of the CONTRACTOR will not result in the specified density.

2. Testing Frequency: The following submittals are required for compacted fill:

   1) A minimum of one moisture-density test shall be performed for each classification of fill material, and existing subgrade material.

   2) One Atterberg limits test and one gradation analysis is required for every six field density tests.

3) Field density tests shall be performed as follows: a minimum of one test per lift per 1000 square yards or fraction thereof is required for fill material and a minimum of one test per lift per 1000 square yards or fraction thereof is required for subgrades prior to filling.

3. At least one test shall be performed on the compacted fill.

4. Visual Inspection for Fill Operations: Upon completion of all excavation of unsuitable material, and for all footings, the Geotechnical Engineer shall visually inspect the subgrade and excavations. The visual inspection shall be conducted to assure that the data obtained from the test borings and used as a basis of design was representative of the site conditions. Upon completion of the inspection, the Geotechnical Engineer shall provide written notification to the OWNER and ENGINEER.

5. Proof Rolling for Fill Operations: Following visual inspection, CONTRACTOR shall demonstrate to the Geotechnical Engineer that the exposed subgrade does not contain previously unidentified soft areas by proof rolling. Proof rolling shall consist of rolling the entire surface with approved mechanical equipment while observing the subgrade for displacement or deformation.

END OF SECTION

SECTION 31 10 00 - SITE CLEARING

PART 1 GENERAL

1.1 DESCRIPTION

1. Work Included: Work shall be completed as described in this section and shall include the furnishing of all labor, material, equipment, and appurtenances to remove all tree stumps, trees, limbs, sod, topsoil, and rubbish from construction area and dispose of said material in an approved location. Stockpile topsoil in an approved area for later use during final grading and restoration. The CONTRACTOR shall furnish all labor materials, supplies, and equipment necessary to provide erosion and sediment control during construction of the facilities.

2. Related Sections: Additional Sections of the Documents which are referenced in this Section include:

   1) Section 31 25 00 – Erosion and Sedimentation Controls

   2) Section 32 10 00 – Bases, Ballasts, and Paving

   3) Section 32 92 19 – Seeding

1.2 REFERENCES

1. General: The work shall comply with the most recent standards or tentative standards as published at the date of the contract and as listed in this specification using the abbreviation shown.

2. American Society for Testing and Materials (ASTM):

   1) D448 Standard Classification for Sizes of Aggregate for Road and Bridge Construction

3. Virginia Department of Transportation (VDOT) - Road and Bridge Specifications:

   1) 106 Control of Material

4. Virginia Erosion and Sediment Control Handbook (VESCH):

   1) Chapter 3 State Minimum Standards and Specifications

1.3 DEFINITIONS

1. Clearing: Clearing shall consist of the felling, trimming, and cutting of trees into sections and the satisfactory disposal of the trees and other vegetation designated for removal, including down timber, snags, brush, and rubbish occurring in the areas to be cleared.

2. Grubbing: Grubbing shall consist of the removal and disposal of brush, stumps, roots larger than 3 inches in diameter, and matted roots from the designated grubbing areas.

3. Usable Topsoil: Topsoil to be stockpiled for restoration shall consist of friable clay loam, free from roots, stones, and other undesirable material and shall be capable of supporting a good growth of grass.

4. Large Trees: Trees, limbs, and other timber having a diameter of 3 inches and greater shall be disposed of as saw logs, firewood, and other usable material.

5. Brush: Brush and tree tops may be chipped, stockpiled, and used for mulch on the project.

1.4 QUALITY ASSURANCE

1. Coordination: Coordinate clearing operations with the AUTHORITY to limit clearing of work areas.

1.5 PROJECT CONDITIONS

1. Site Protection:

   1) CONTRACTOR shall provide protection as necessary to prevent damage to existing site improvements or vegetation to remain in place as indicated on the plans.

   2) CONTRACTOR shall protect improvements on adjoining properties and on AUTHORITY's property.

   3) CONTRACTOR shall restore damaged improvements to their original condition, as acceptable to parties having jurisdiction.

1.6 ACCESS ROAD

1. General: Access roads shall be as shown on the plans and in accordance with Section 32 10 00 – Bases, Ballasts, and Paving of these specifications.

PART 2 PRODUCTS

2.1 EROSION AND SEDIMENT CONTROL

1. General: The CONTRACTOR shall be responsible for complying with all provisions of the erosion and sediment control plans and notes including the construction, installation, and maintenance of all mechanical and vegetative erosion and sediment control measures for the duration of the project. Siltation and pollution control measures shall be in accordance with the VESCH, Bedford County Department of Natural Resources, and Section 31 25 00 – Erosion and Sedimentation Controls of these specifications.

2. Permanent Measures: Permanent erosion and sediment control shall be in accordance with this section and Section 32 92 19 - Seeding. The Contractor shall schedule excavation, fill, finish grading, and seeding work in such a manner as to minimize exposure to erosive forces.

PART 3 EXECUTION

3.1 CLEARING AND GRUBBING

1. General: Within the public right-of-way or easement, the CONTRACTOR shall give the property owner written notice to remove shrubbery, trees, or other property, with the exception of fences, which will be affected by construction. If such property has not been moved after sufficient notification, the CONTRACTOR may remove or take other measures as needed to proceed with the work. Fencing shall be removed and replaced by the CONTRACTOR. When located within state maintained right-of-way, permission must be obtained through the VDOT local residency prior to large tree removal.

2. Clearing: All trees, stumps, roots, brush, and other vegetation in areas to be cleared shall be cut off flush with or below the original ground surface, except such trees and vegetation as may be indicated on the plans to be left standing. Trees designated to be left standing within the more cleared areas shall be trimmed of dead branches 1-1/2 inches or more in diameter or as directed by the AUTHORITY. Limbs and branches to be trimmed shall be neatly cut close to the trunk of the tree or main branches. Trees and vegetation to be left standing shall be protected from damage incident to clearing, grubbing, and construction operations by the erection of barriers or by such other means as the circumstances require. All

trees, stumps, roots, brush, and other vegetation in the area shall be removed to a depth of 12 inches below finished grades. All brush, small trees, limbs, sod or rubbish shall be removed from the site.

3. Grubbing: Material to be grubbed, together with logs and other organic debris not suitable for foundation purposes, shall be removed to a depth of not less than 12 inches below the original surface level of the ground in areas indicated to be grubbed and in areas indicated as construction areas, such as buildings, and areas to be paved. Depressions made by grubbing shall be filled with suitable material and compacted to make the surface conform to the original adjacent surface of the ground.

4. Staking: Areas to be cleared shall be staked on the ground by the CONTRACTOR and approved by the AUTHORITY before clearing operations are begun. CONTRACTOR shall obtain services of a licensed Engineer or Land Surveyor for purposes of facilities layout. Locations to be field staked by the CONTRACTOR and approved by AUTHORITY's Representative prior to any construction.

5. Protection of Trees: AUTHORITY shall mark any trees within the limits of clearing, 4 inches in diameter or greater, which are desired to be saved for landscaping purposes. CONTRACTOR shall take whatever measure deemed necessary to protect marked trees throughout the duration of construction.

3.2 DISPOSAL OF MATERIALS

1. Disposal: Carry out disposal of debris and unsuitable or surplus material in accordance with the VDOT 106. In all cases, the CONTRACTOR shall be responsible for obtaining a suitable disposal site.

2. Trees: All felled timber from which saw logs, pulpwood, posts, poles, ties, mine props, or cordwood can be produced shall be considered salable timber, and shall be trimmed of limbs and tops, sawed into salable lengths and removed from the site by the CONTRACTOR. After the location of the proposed improvements has been staked, CONTRACTOR shall notify the property owner of CONTRACTOR's construction schedule. CONTRACTOR's schedule shall include sufficient time for property owner to remove timber from the construction area. CONTRACTOR shall also notify the property owner that if the property owner does not remove the trees necessary for construction in the specified amount of time, any trees felled for construction shall become the property of the CONTRACTOR and removed from the site. Only trees necessary for construction shall be removed by the CONTRACTOR within any easement or rights-of-way.

3. Burning or Removing from Site: Logs, stumps, roots, brush, rotten wood, and other refuse from the clearing and grubbing operations, except for salable timber, may be burned, except where prohibited by the AUTHORITY, State Law, or local ordinance. Permission to dispose of such products on private property shall be in writing, and a copy of this permit shall be filed with the AUTHORITY. Refuse to be burned shall be burned at locations as directed and in a manner to prevent damage to existing structures and appurtenances, construction in progress, trees, and other vegetation. The CONTRACTOR shall be responsible for compliance with all local ordinances, securing permits, and conforming to all Federal and State laws and regulations relative to the building of fires. Burning or other disposal of refuse and debris and any accidental loss or damage attendant thereto shall be the CONTRACTOR's responsibility.

3.3 DRAINAGE

1. General: The CONTRACTOR shall be responsible for proper drainage of the site during construction of the project. Water shall not be allowed to accumulate in any of the excavated areas. Storm or ground water collecting on the site during construction shall be removed by pumping, ditching or other suitable means.

3.4 STOCKPILING

1. Topsoil: Topsoil shall be stripped from all excavation and fill areas and stockpiled in an approved area until needed for finish grading. Stockpiles shall be seeded within 7 days of construction in accordance

with Chapter 3 of VESCH. Silt fence shall also be maintained around the stockpiles until mature vegetation is established on the stockpile.

2. Spreading of Topsoil: The spreading of topsoil shall be in accordance with Section 32 92 19 - Seeding in these specifications.

3. Mulch: Chipped brush to be used in the project as landscaping mulch shall be stockpiled in an approved area until needed. Stockpile shall be maintained to prevent contamination of the material.

END OF SECTION

SECTION 31 23 33 – TRENCHING AND BACKFILLING

PART 1 GENERAL

1.1 DESCRIPTION

1. Work Included: Excavation and preparation of trenches as shown on the plans and specified herein, backfilling and site restoration.

2. Related Sections: Additional Sections of the Documents which are referenced in this Section include:

   1) Section 31 10 00 - Site Clearing

   2) Section 31 00 00 – Earthwork

   3) Section 32 10 00 – Bases, Ballasts, and Paving

   4) Section 32 92 19 - Seeding

1.2 REFERENCES

1. General: The work shall comply with the most recent standards or tentative standards as published at the date of the contract and as listed in this specification using the abbreviation shown.

2. American Society for Testing and Materials Publications (ASTM):

1)	A48	Standard Specification for Gray Iron Castings
2)	D448	Standard Classification for Sizes of Aggregate for Road and Bridge Construction
3)	D698	Standard Test Methods for Laboratory Compaction Characteristics of Soils Using Standard Effort (12,400 ft-lbf/ft^3 (600 kN-m/m^3))
4)	D1556	Standard Test Method for Density and Unit Weight of Soil In Place by the Sand-Cone Method
5)	D1557	Standard Test Methods for Laboratory Compaction Characteristics of Soil Using Modified Effort (56,000 ft-lbf/ft^3)(2,700kN-m/m^3)
6)	D2167	Standard Test Method for Density and Unit Weight of Soil In Place by the Rubber Balloon Method
7)	D2487	Standard Practice for Classification of Soils for Engineering Purposes (unified Soil Classification System)
8)	D4318	Standard Test Method for Liquid Limit, Plastic Limit, and Plasticity Index of Soils
9)	D6938	Standard Test Method for In-Place Density and Water Content of Soil and Aggregate by Nuclear Methods (Shallow Depth)

3. Virginia Department of Labor and Industry - Occupational Safety and Health Standards for the Construction Industry

   1) Subpart P Excavations

   2) Subpart U Blasting and the Use of Explosives

4. Virginia Statewide Fire Prevention Code VR 394-01-6

   1) VR 394-01-6 Virginia Statewide Fire Prevention Code

5. Virginia Erosion and Sediment Control Handbook (VESCH)

   1) Chapter 3 State Minimum Standards and Specifications

1.3 DEFINITIONS

1. Controlled Fill: Controlled fill is required beneath all areas on which final grade is not placed on original excavated soil.

2. Classified Excavation: For the purposes of payment, material shall not be classified.

3. Satisfactory / Suitable Materials: Materials classified by ASTM D2487 as GW, GP, GM, GC, SW, SP, SM, SC, ML, and CL are satisfactory as fill for overlot grading and are satisfactory in-situ.

4. Unsatisfactory / Unsuitable Materials: Materials classified by ASTM D2487 as OL, OH, MH, CH, and PT are unsatisfactory in-situ and as fill. Unsatisfactory materials also include those materials containing roots and other organic matter, trash, debris, frozen materials, and stones larger than 6 inches. Unsatisfactory materials also include man-made fills, refuse, or backfills from previous construction.

5. Cohesionless and Cohesive Materials: Cohesive materials include materials classified as GC, SC, ML, CL, MH, and CH. Cohesionless materials include materials classified in ASTM D2487 as GW, GP, SW, and SP. Materials classified as GM and SM will be identified as cohesionless only when the fines have plasticity index as measured by ASTM D4318 of zero.

6. Degree of Compaction: Degree of compaction is a percentage of the maximum density obtained by the test procedure presented in ASTM D698 or ASTM D1557 as specified, as a percent of laboratory maximum density.

7. Topsoil: Material obtained from excavations, suitable for topsoils, shall consist of friable clay loam, free from roots, stones, and other undesirable material and shall be capable of supporting a good growth of grass.

8. Rock: Rock shall consist of boulders measuring 1/2 cubic yard or more and materials that cannot be removed without systematic drilling and blasting such as rock material in ledges, bedded deposits, unstratified masses and conglomerate deposits, and below ground concrete or masonry structures, exceeding 1/2 cubic yard in volume.

9. Unyielding Material: Unyielding material shall consist of rock and gravelly soils with stones greater than 18 inches in any dimension.

10. Unstable Material: Unstable material shall consist of materials too wet to properly support the utility pipe, conduit, or appurtenant structure.

11. Select Granular Material: Select granular material shall consist of well-graded sand, gravel, crushed stone or crushed slag composed of hard, tough and durable particles, and shall not contain more than 10 percent by weight of material passing a No. 200 mesh sieve. The maximum allowable aggregate size shall be 1 inch, or the maximum size recommended by the pipe manufacturer, whichever is smaller.

12. Initial Backfill Material: Initial backfill material shall consist of select granular material or satisfactory materials free from rocks 1 inch or larger in any dimension. All backfill materials shall be free from mud, refuse, construction debris, organic material, boulders, frozen or otherwise unsuitable material.

13. Remaining backfill: Remaining backfill may contain stones up to 5 inches in their greatest dimension, unless otherwise specified. All backfill materials shall be free from mud, refuse, construction debris, organic material, boulders, frozen or otherwise unsuitable material.

1.4 QUALITY ASSURANCE

1. Testing Results: Copies of all laboratory and field test reports shall be submitted to the AUTHORITY within 72 hours of the completion of the test. Copies of test reports for work within VDOT right-of-way shall also be submitted to the local VDOT Residency office.

2. Approved Products List: The CONTRACTOR shall consult the AUTHORITY'S Approved Products List for acceptable materials and equipment.

PART 2 PRODUCTS

2.1 PLASTIC MARKING TAPE

1. General: Plastic marking tape shall be acid and alkali-resistant polyethylene film, 3 inches wide with minimum thickness of 4.0 Mil. The tape shall be installed directly above the pipe, at depth of 12 to 18 inches below finished grade unless otherwise shown. Tape shall have a minimum strength of 1750 psi lengthwise and 1500 psi crosswise. The tape shall not be made of any metallic materials. Tape color shall be as specified in Table 1 and shall bear a continuous printed inscription describing the specific utility.

TABLE 1
Tape Color

Red:	Electric
Yellow:	Gas, Oil, Dangerous Materials
Orange:	Telephone, Telegraph, Television, Police, and Fire Communications
Blue:	Water Systems
Green:	Sewer Systems (including sewer force main)

2.2 TRACE WIRE AND BOX

1. General: Tracer wire shall be #12 A.W.G solid copper conductor with high molecular weight polyethylene (HMWPE) insulation suitable for direct burial applications.

2. Splice Kit: Splice Kit shall be 3M DBR, DBR-6, DBR/Y-6 or approved equal containing silicone electrical insulating gel and that can accommodate 2 to 4 #12 A.W.G. wires. Wire voltage and splice kit voltage must be compatible with similar voltage ratings.

3. Tracer Wire Access Box: Tracer wire access box shall be cast iron conforming to ASTM A-48 Class 30 and shall have "WATER" or "SEWER" cast into the cover as appropriate.

4. Vault Tracer Wire Access: In lieu of providing a Tracer Wire Access Box, a stainless steel bolt shall be provided in the vault ceiling near the access hatch to attach the tracer wire.

2.3 ELECTRONIC MARKER

1. General: Electronic markers shall be blue for water applications and green for sewer applications.

2.4 PIPELINE AND APPURTENANCE MARKER

1. Pipeline markers shall be two-inch PVC pipe over a t-post that is buried 12 to 18-inches. Total height above ground shall be no less than 48-inches. The top 6-inches shall be painted or have a color-coded cap (blue for water, green for sewer) and shall include reflective tape on the marker to make it easily identified. The marker shall have labeling "BRWA SEWER" or "BRWA WATER".

PART 3 EXECUTION

3.1 GENERAL

1. Classification: Excavation and material shall be unclassified for purposes of payment. No extra payment will be considered for any excavation regardless of the type of material encountered including rock.

3.2 CLEARING

1. General: Only that portion of the work area actually needed for construction shall be cleared unless directed otherwise by the AUTHORITY. In no case shall clearing or debris from clearing operations be taken past rights-of-way lines or designated work areas. Areas disturbed by construction operations shall be protected from erosion by suitable methods outlined in Chapter 3 of the Virginia Erosion and Sediment Control Handbook.

3.3 COORDINATION

1. General: The CONTRACTOR shall notify the property owner in advance of commencing work and in the event of the necessity of disrupting utility or other services to such property, he shall notify the AUTHORITY or responsible person in charge of such utility or other services and arrange for the disruption and restoration of such service in a manner which will result in a minimum of inconvenience to parties concerned.

2. The CONTRACTOR shall contact Miss Utility and have utilities located prior to starting construction. Locations of existing facilities should be determined by the CONTRACTOR far enough in advance of the construction to provide for modification in design, if required.

3.4 WASTE AREAS

1. General: Disposal of unsuitable and surplus material at designated waste areas shall be carried out in accordance with Section 31 10 00 – Site Clearing.

3.5 EXCAVATION AND PREPARATION OF TRENCH

1. Depth of Trench and Minimum Cover: Depth of trenches shall provide a minimum of 36 inches of cover, measured from the top of pipe, unless otherwise noted on the plans and cut sheets. Depth of cover in VDOT right-of-way may be as required by VDOT. Pressure mains in undeveloped areas shall have a

minimum cover of 42 inches, unless otherwise formally requested and approved. Pressure mains shall have a maximum cover of 6 feet, unless otherwise formally requested and approved.

2. Trench Width: Width shall be sufficient to allow pipe installation without walking or standing on pipe. The trench width at a point 12 inches above the top of the pipe shall not be less than 6 inches and not more than 12 inches on each side of the pipe's largest diameter unless otherwise directed by the AUTHORITY.

3. Gravity Sewer Trench: Gravity sewer trenches shall be excavated to allow for a depth of ¼ of the pipe's outside diameter or a minimum of 4 inches of stone bedding in earth and 6 inches of stone bedding in rock. Any part of the bottom of the trench excavated below the specified grade shall be brought back to grade with approved material and compacted in accordance with the specifications. Refer to Standard Details TB-1 and TB-2.

4. Pressure Pipe Trench: Force main and water main trench beds shall be in accordance with Standard Detail TB-3. The trench shall be excavated so as to provide a uniform and continuous bearing and support for the pipe on solid and undisturbed ground between bell holes. Bell holes shall be excavated to accommodate each bell. . Any part of the bottom of the trench excavated below the specified grade shall be brought back to grade with approved material and compacted in accordance with the specifications. The finished subgrade shall be prepared accurately by means of hand tools. In areas with firm subgrade, excavation for bell holes shall be sufficient, except when in rock. If PVC pressure pipe is used, a minimum of 4-inches of stone may be required for bedding for the first 1000 feet of pipe installed. After which, bedding requirement shall be as directed by the AUTHORITY'S Project Representative based on soil conditions. When a firm subgrade is not present, as deemed by the AUTHORITY's Project Representative, stone bedding shall be required as shown in Standard Detail TB-3.

5. Unsuitable Material: Wet or otherwise unsuitable soil at the subgrade shall be removed and replaced with compacted stone to the bottom of the normal trench bedding, at no cost to the AUTHORITY. Excess or unsuitable materials shall be legally disposed of off-site by the CONTRACTOR.

6. Rock Excavation: Ledge rock, boulders, and large stones shall be removed to provide a clearance of at least 6 inches below and on each side of all pipe, manholes, valves or other appurtenances and overdepth shall be backfilled with satisfactory material and compacted in conformance with BACKFILLING subsection.

7. Topsoil: Topsoil shall be stripped from excavation area and stockpiled in approved area until needed for finish backfill and grading.

8. Trench Protection: The CONTRACTOR shall furnish and erect such sheathing, bracing and shoring, and shall furnish necessary signs, barricades and temporary lighting as may be pertinent for the protection of his work, employees, the public, adjacent structures, and to guard against contingencies which might give rise to delays in the work. Sheathing left in place shall be at the CONTRACTOR's expense. Where trench wall sloping is necessary for safety or other reasons, the AUTHORITY shall be notified to determine if additional strength pipe will be required. Responsibility for preservation of trench banks and other excavated spaces and the prevention of injury to any persons or property shall rest entirely with the CONTRACTOR. A maximum of 200 feet of trench for each crew will be allowed open at any one time. Trench construction and safety shall be governed by the Occupational Safety and Health Standards for the Construction Industry, Subpart P.

9. Dewatering: Pumping, Bailing, and Draining: The CONTRACTOR shall remove any water which may accumulate or be found in the trenches or other excavations and shall keep the excavations clear of water while work is being installed, unless approval to the contrary is granted by the AUTHORITY.

10. Blasting: Blasting when permitted shall be in accordance with Section 31 00 00 – Earthwork.

11. Cleated Equipment: No cleated equipment shall be used on pavements. Road drainage shall not be clogged, and shoulders, ditches, roadside drainage facilities and pavement affected by trenching operations shall be maintained in a condition satisfactory to the AUTHORITY and VDOT. Entrances shall not be blocked except for short periods as arranged with the property owner, and ingress and egress to adjacent property shall be maintained at all times. The CONTRACTOR shall be responsible for the repair of any damaged drainage structures. Private roads shall be restored to an equal or better condition of that prior to construction.

3.6 WORK WITHIN ROAD RIGHTS-OF-WAY

1. Permits: CONTRACTOR acting as an Agent for AUTHORITY shall apply for and obtain a Land Use Permit from VDOT for all work within the right-of-way, unless otherwise stated in the Contract Documents. CONTRACTOR shall provide a copy of Permit to AUTHORITY prior to performing any work within the right-of-way. CONTRACTOR shall comply with all provisions of Permit. Work within right-of-way that is not maintained by VDOT shall be coordinated with and permissions obtained from the governing body having jurisdiction.

2. Testing: All testing work performed by the independent testing laboratory within the right-of-way shall be performed by a licensed professional engineer or by a technician under the direction of a licensed professional engineer, qualified in geotechnical engineering.

3. Traffic Control: Typical traffic control for utility work on road rights-of-way shall comply with VDOT Work Area Protection Manual traffic control details.

4. Traffic Routing: Traffic shall not be blocked or re-routed without permission from VDOT. Where one way traffic is permitted to be maintained, it shall be flagged 24 hours per day. Traffic shall at all times be properly protected by adequate lights, barricades and signs, and also flagmen when needed.

5. Erosion and Sediment Control: Erosion and Sediment Control measures shall be in accordance with Section 31 25 00 – Erosion and Sedimentation Controls in these specifications.

6. Trenches: No excavation within a road right-of-way will be allowed to remain open overnight unless special permission is obtained from the AUTHORITY and VDOT.

7. Roadway Crossings: Except where specifically noted on the plans, cutting of existing road pavement will not be allowed. Installation of pipe under road pavement shall be by boring and jacking, or tunneling. Casing or liner plate shall be advanced to support the excavation as the bore or tunnel progresses. If the crossing cannot be made by any of the above methods, the CONTRACTOR must contact the AUTHORITY. In the event of a failed bore attempt, casing shall be left in place and ends sealed with concrete, or if casing is not abandoned in place the excavation shall be pumped full with a portland cement grout. When pavement must be cut, the cuts shall be made in a straight line, parallel to the pipe, on each side of the section to be excavated. After the excavated section has been backfilled and immediately prior to repaving an additional 6 inches of pavement shall be removed from each side of the trench so that an undisturbed shoulder will be provided under the new work. Sidewalks or curb and gutter disturbed by construction shall be removed and replaced at existing joints. Cutting shall be done neatly so that a uniform, straight joint will result to provide a bond with the original concrete or pavement. In VDOT rights-of-way cutting of pavement or open cutting ditches for utility installation shall be approved by that agency.

8. Roadway Crossings Through Casings: Where casings are used, care shall be taken to maintain the proposed plan grade. Before pushing the pipe through casing, casing spacers shall be attached to the pipe to keep the pipe centered in the casing and to prevent damage when installation is made. Care shall be taken to ensure that the installed pipeline is well secured to prevent movement as detailed in Standard Detail CS-1, CS-2 or in special plan details.

9. Uncased Bores: When directional boring equipment is used for installing uncased pipelines under driveways, sidewalks, or other select locations, voids shall be properly grouted to prevent settlement. Uncased bores will not be permitted for pipes larger than 6-inches in diameter.

3.7 BACKFILLING

1. Pipe Bedding:

   1) Sanitary Sewer (Gravity) Bedding: Bedding shall be required on all gravity sewer lines, and shall be in accordance with Standard Detail TB-1. Bedding material shall extend from the excavated trench bottom to the pipe springline (midpoint) except on PVC pipe where it shall extend to the top of the pipe. Bedding material shall be compacted to 95 percent of maximum density as measured by ASTM D698.

   2) Storm Water Bedding: Bedding shall be required on all storm sewer lines, and shall be in accordance with Standard Detail TB-2.

   3) Pressure Pipe Bedding: Bedding for pressure pipe shall be required when trench is in rock or when firm subgrade is not present, and shall be in accordance with Standard Detail TB-3. Bedding material shall extend from the excavated trench bottom to the pipe springline (midpoint). Bedding material shall be compacted to 95 percent of maximum density as measured by ASTM D698. Trench bedding for parallel installation of sewer and water shall be in accordance with Standard Detail TB-4 and Section 33 03 00 – Utility Pipe and Materials.

2. Backfill

   1) The CONTRACTOR may backfill with the excavated material, provided it meets the conditions as stated above.

   2) Backfilling to Grade: Initial backfill shall be to a depth of at least one foot over the pipe and compacted prior to placement of remaining backfill. Special care shall be taken to backfill under the pipe and to tamp this material into place to provide a firm bed. Material shall be deposited on both sides of the pipe simultaneously, and compacted into place by tamping. Initial backfill shall be placed in lifts not to exceed 6 inches (prior to compaction). Remaining backfilling shall be carried up evenly in lifts not to exceed 1 foot. Backfill in trenches outside of proposed pavement areas or street rights-of-way, or in other areas when allowed by the AUTHORITY, shall be compacted to a dry density equal to or greater than the density of the undisturbed soil surrounding the trench. Each layer of earth shall be compacted before the next layer is applied. A hydro-hammer shall not be used for compaction. Care shall be taken to prevent damage to pipe or other structures during compaction. Damage to pipelines or other structures resulting from compaction shall be corrected by the CONTRACTOR without expense to the AUTHORITY.

   3) Backfilling in Controlled Areas: Backfill under pavement, proposed pavement, or in areas within rights-of-way shall be in layers of selected earth not more than 6 inches in thickness and each layer shall be compacted to a minimum of 95 percent of maximum density when tested in accordance with ASTM D698. Compaction shall be in accordance with instructions in this Section as modified herein. Backfill shall be in accordance with VDOT requirements when in state maintained right-of-way. The top course of backfill directly under pavement shall consist of aggregate base material meeting the requirements of VDOT #21A stone. The depth of this course shall be at least 1-l/2 times greater than the existing base course, but in no case shall be less than 12 inches. Moisture content shall be within 20 percent of optimum.

3. Marking of Pipelines and Appurtenances:

   1) Locations of Marking Facilities: All pipe and appurtenances for water and sewer shall be marked as specified in Section 33 10 00 – Water Utilities and Section 33 30 00 – Sanitary Sewerage Utilities and

in accordance with this Section. Where multiple appurtenances are in close proximity to each other, the number and location of tracer wire access boxes shall be as directed by the AUTHORITY.

a) Plastic Marking Tape: The marking tape shall be buried 12 to 18 inches below the finished surface in accordance with the Standard Details.

b) Tracer wire: In addition to plastic marking tape, tracer wire shall be installed with and attached to all pipe lines by taping at minimum 10 foot intervals and looped up through all tracer wire access boxes in accordance with Standard Detail TW-1. The tracer wire shall be one continuous run without looping or coiling to allow for locating of wire without loss or deterioration of low audio frequency (9.8 kHz) signal for distances in excess of 1,000 linear feet. Splicing is not permitted unless two spools of wire are being spliced together. The wires shall be stripped on each connecting end of the protective jacket or coating, and wire ends shall be connected with an approved splice kit. Tracer wire shall be able to extend a minimum of 18-inches outside the top of the tracer wire access box.

c) Trace wire access box: Tracer wire access boxes shall be utilized in all locations where tracer wire is brought to the surface. Adjustable tracer wire access boxes shall be provided in undeveloped areas and areas where final grade adjustments are expected. Tracer wire access boxes shall be installed a maximum of 12-inches horizontal distance from appurtenance.

d) Electronic markers: Electronic markers shall be placed on top of the utility line or directly over the crown of the pipe and as close to the utility line as possible but in no case deeper than 5 feet from finished grade and a minimum horizontal separation between markers of ten (10) feet.

e) Marking posts: Marking posts consisting of two-inch PVC pipe over t-posts shall be installed at water and sewer appurtenances as specified in Section 33 10 00 – Water Utilities and Section 33 30 00 – Sanitary Sewerage Utilities that are located on undeveloped land and as directed by the AUTHORITY's Project Representative.

4. Backfill Testing: The CONTRACTOR shall demonstrate the adequacy of backfill compaction by performing density testing of the completed trench at no additional cost to the AUTHORITY. Testing shall be performed by an independent testing laboratory qualified to perform such tests and approved by AUTHORITY. Density testing shall be performed at three depths for each test location: surface, mid-depth, and near maximum trench depth. The character of the backfill material will be observed during the excavation for density testing to determine conformance with the specifications. Density testing shall be performed using nuclear field density equipment or conventional weight-volume methods. If the weight-volume method is used, volume shall be determined by using the sand replacement test (ASTM D1556) or liquid displacement methods (ASTM D2167). If nuclear methods (ASTM D6938) are used, the trench correction effect shall be accounted for by recalibrating the nuclear gauge on its calibration block at the location of each test prior to taking the density measurement. The CONTRACTOR shall furnish all equipment, tools, and labor to prepare the test site for testing. All testing shall be witnessed by the Authority's Project Representative. The test shall be repeated until satisfactory results are obtained. The CONTRACTOR shall be charged for all retests at the normal rates for inspection services.

1) Normal Testing Frequency: One test shall be performed within the first 500 feet of pipe installed by each crew. This test will be used as an initial evaluation of the compaction methods being used. Beyond the initial 500 feet, one test shall be performed in each 1,000 foot section of pipe installed or fraction thereof. Testing shall progress as each 1,000 foot section is completed. The location of the test within each section shall be selected by the AUTHORITY's Project Representative. Testing which indicated that unacceptable material has been incorporated into the backfill, or that insufficient compaction is being obtained shall be followed by expanded testing to determine the limits of the unacceptable backfill.

2) Expanded Testing Requirements: If normal testing within a test section indicated unacceptable backfill, the AUTHORITY may require additional testing within the same test section to determine the limits of unacceptable backfill. Additional testing required by the AUTHORITY's Project Representative shall not exceed testing of 4 additional locations within the test section. Unacceptable backfill within the limits established by the testing shall be removed and replaced by the CONTRACTOR at no additional cost to the AUTHORITY. Additional testing beyond that required may be performed by the CONTRACTOR at his expense to further delineate limits of unacceptable backfill.

3) Additional Testing: Testing beyond the normal frequency or expanded testing required which is requested and approved by the AUTHORITY, shall be at the AUTHORITY's expense.

5. Finished Surfaces: Uniformly smooth grading of disturbed areas shall be required after backfill and compaction. Road shoulders shall have a minimum depth of 6 inches of VDOT #25 or #26 crusher run aggregate, compacted to a minimum 95 percent of maximum density as measured by ASTM D698. Ditches and gutters shall be finished to drain readily. In grass or lawn areas, the last 4 inches of compacted fill will consist of topsoil or an approved soil which will support a turf growth after fertilizing and seeding. Settlement or other damage that occurs prior to acceptance of this work shall be repaired and grades satisfactorily re-established.

6. Quality Assurance: The CONTRACTOR will be responsible for and shall repair any settlement in the backfill or pavement for a period of one year after acceptance of the work.

3.8 SITE RESTORATION

1. Replacement of Property: The CONTRACTOR shall restore all pavement, sidewalks, curbing, gutter, fences, poles, culverts, utilities or other such property and surface structures removed or disturbed as a part of the work to a condition equal to or better than that before the work began.

2. Pavement Repair and Replacement: Pavement, if disturbed, shall be repaired or replaced in accordance with Section 32 10 00 – Bases, Ballasts, and Paving.

3. Drainage Improvements: The CONTRACTOR shall restore and/or repair all drainage ways and swales including paved or concrete channels as part of this work to a condition equal to that before the work began. Damaged drainage facilities shall be replaced. Restored ditches and swales shall provide positive drainage from roadways. Drainage restoration within VDOT rights-of-way shall be to the satisfaction of the Virginia Department of Transportation.

4. Cleanup: The CONTRACTOR shall at all times keep the site cleaned to the satisfaction of the AUTHORITY's Project Representative. In all cases, CONTRACTOR shall "broom" the surfaces of paved streets immediately following backfilling. All surplus materials shall be removed and disposed of from the site of the work unless directed otherwise by the AUTHORITY. Where material is placed on pavement, a layer of stone dust or sand shall be applied first to facilitate clean-up.

5. Seeding: Shall be in accordance with Section 32 92 19 – Seeding.

6. Roadways/Driveways: For private gravel or dirt driveways disturbed as part of the work, the CONTRACTOR shall restore the road surface by grading and providing adequate drainage, and with a finished layer of 6 inches of VDOT #25 or #26 crusher run stone aggregate in the disturbed areas.

END OF SECTION

SECTION 31 25 00 - EROSION AND SEDIMENTATION CONTROLS

PART 1 GENERAL

1.1 DESCRIPTION

1. Work Included: The CONTRACTOR shall furnish all labor, materials, supplies and equipment necessary to provide erosion and sediment control during construction of the facilities. The CONTRACTOR shall be responsible for obtaining an approved erosion and sediment control plan.

2. Related Sections: Additional Sections of the Documents which are referenced in this Section include:

   1) Section 01 33 00 – Submittal Procedures

   2) Section 01 66 00 – Product Delivery, Storage, and Handling Requirements

   3) Section 32 92 19 – Seeding

1.2 TEMPORARY MEASURES

1. General: Temporary erosion and sediment control shall be achieved by using the following measures where indicated on the plans or as required for erosion control: Straw bale barriers, temporary interceptor dikes, gravel outlet structures, and silt fence barrier. Said measures shall be constructed and made workable prior to beginning site excavation and grading work.

1.3 PERMANENT MEASURES

1. General: Permanent erosion and sediment control shall be achieved by seeding, landscaping, and drainage structures as detailed in the erosion and sediment control plan, VESCH, and Section 32 92 19 – Seeding of these specifications. The CONTRACTOR shall schedule excavation, fill, finish grading, and seeding work in such a manner as to minimize exposure to erosive forces. Seeding of exposed areas shall commence as soon as possible after excavating, backfilling, grading, or other operations have been completed and shall be maintained until an acceptable stand of turf has been established. Slope protection shall be installed as soon as the grading is complete.

1.4 REFERENCES

1. General: The work shall comply with the most recent standards or tentative standards as published at the date of the contract and as listed in this specification using the abbreviation shown.

2. American Society of Testing and Materials (ASTM):

   1) D448 Standard Classification for Sizes of Aggregate for Road and Bridge Construction

3. Virginia Department of Conservation and Recreation Virginia Erosion and Sediment Control Handbook (VESCH):

   1) Chapter 3 State Minimum Standards and Specifications

4. Virginia Stormwater Management Program (VSMP) Permit Regulations

5. Virginia Department of Transportation (VDOT) - Road and Bridge Specifications:

   1) 414 Riprap

1.5 QUALITY ASSURANCE

1. General: All erosion and sediment control measures shall be in accordance with Erosion and Sediment Control Ordinance of Bedford County, Virginia and Virginia Erosion and Sediment Control Handbook (VESCH), Virginia Stormwater Management Program (VSMP) Permit Regulations, and all revisions and addenda. Methods used on site shall include, but shall not be limited to, VESCH, Chapter 3.

2. Performance Requirements: The erosion control measures shall be installed such that the erosion of disturbed ground and the siltation of storm drain pipes and inlets will be prevented.

3. Regulatory Requirements: All phases of the construction work shall comply with or exceed the minimum state requirements for controlling erosion and sedimentation from "land disturbing activities" as outlined in the "Virginia Erosion and Sediment Control Handbook" (VESCH), and all revisions and addenda thereto. Construction activities shall also comply with the VSMP Permit Regulations as applicable.

1.6 MAINTENANCE

1. Maintenance Service: The erosion control measures shall be maintained by the CONTRACTOR until a vegetative groundcover is achieved, which in the opinion of the AUTHORITY and the Bedford County Department of Natural Resources, is mature enough to control soil erosion and to survive severe weather conditions.

1.7 SUBMITTALS

1. General: Shall be in accordance with Section 01 33 00 – Submittal Procedures.

2. Materials: The CONTRACTOR shall submit to the AUTHORITY shop plans or catalog cuts for:

   1) Materials list of items proposed to be provided under this Section.

   2) Manufacturer's specifications and other data needed to prove compliance with the specified requirements.

1.8 PRODUCT HANDLING

1. General: Shall be in accordance with Section 01 66 00 – Product Delivery, Storage, and Handling Requirements.

1.9 SITE CONDITIONS

1. Environmental Requirements: Properties and natural waterways adjacent to the site of land disturbance shall be protected from sedimentation by the use of the erosion control measures shown on the plans and in compliance with pertinent erosion and sediment control practices.

2. Vegetation: When conditions detrimental to plant growth are encountered such as rubble fill, adverse drainage conditions or obstructions, the CONTRACTOR shall notify the AUTHORITY before planting.

3. Planting Time: Times shall be in accordance with VESCH 3.31 Temporary Seeding, 3.32 Permanent Seeding, and the Bedford County Seeding Requirements.

PART 2 MATERIALS

1. General: Erosion and sedimentation control materials and placement shall be in accordance with Chapter 3 of VESCH and the Bedford County Erosion and Sediment Control Ordinance.

2. Straw Bale Barriers: Straw bale barriers shall be placed at the locations shown on the plans, or as otherwise directed by the AUTHORITY or Bedford County Department of Natural Resources, and in accordance with VESCH 3.04. Barriers shall be inspected frequently and repair or replacement must be made promptly if needed.

3. Silt Fencing: Silt fence barriers shall be constructed, placed, and maintained in accordance with VESCH 3.05.

4. Gravel Outlet Structures: Gravel outlet structures shall be constructed of ASTM D448 #2 stone or its equivalent. The bases and side slopes of the gravel shall be placed so as to conform to the dike configuration. The invert of the outlet shall be not less than six inches lower than the top of the adjoining earth dike, and the gravel shall extend to the top of the dike. Discharge from the outlet structure shall be onto an already stabilized area or watercourse. The gravel outlet structure shall be inspected for silt accumulation after each runoff-producing rain. If structure ceases to function properly due to silt accumulation, the gravel shall be replaced.

5. Temporary Diversion Dikes: Temporary diversion dikes shall be constructed in accordance with VESCH 3.09, and machine compacted with a positive grade draining to the gravel outlet structure. Periodic inspection and maintenance of the dike shall be provided to insure proper functioning of the dike.

6. Construction Entrance: Construction entrances shall be constructed in accordance with VESCH 3.02 and 3.03 in the locations indicated on the Drawings, or as otherwise approved by the AUTHORITY, Bedford County Department of Natural Resources, and VDOT. Adequate stone shall be applied at entrances to the work area required or shown on the plans prior to and during construction to control dust, erosion, siltation, and to maintain normal traffic. Stone used to construct the temporary construction entrance shall be VDOT #1 Course Aggregate in accordance with VESCH 3.02.

7. Riprap: Riprap shall be in accordance with VESCH 3.19 and shall be a rubble stone riprap, 50 to 150 pounds each, similar to VDOT 414 Class.1, unless shown otherwise on plans.

8. Soil Stabilization Blanket: Blanket shall be a degradable multi-layered soil stabilization blanket consisting of a netting of polyethylene, nylon, vinyl, or other material intertwined with natural organic or manmade mulch, a jute mesh or excelsior material specifically manufactured for maintaining soil slopes until vegetation becomes established. Soil stabilization blanket shall be provided by a manufacturer from VDOT's "Approved Products List" for Treatment 1 as described in VESCH 3.36.

9. Soil Stabilization Mat: Mat shall be a non-degradable, 3-dimensional mat providing a matrix for root growth. Soil stabilization mat shall be provided by a manufacturer from VDOT's "Approved Products List" for Treatment 2 as described in VESCH 3.36

10. Seeding: Seeding shall be in accordance with Section 32 92 19 – Seeding.

PART 3 EXECUTION

3.1 PREPARATION

1. General: Work shall be performed in accordance with Virginia Erosion and Sediment Control Handbook for appropriate installation procedures.

2. Surface Preparation for Stabilization Mat or Blanket: Any storm drainage channel in which a soil stabilization mat or blanket is to be installed shall be prepared for installation according to VESCH 3.36 and the manufacturer's recommendations. Any areas which are to be covered with a soil stabilization mat or blanket shall be protected from erosion prior to the installation. The protection shall include, but not be limited to, the installation and maintenance of silt fences, straw bale barriers, and temporary diversion dikes.

3. Rip Rap: Excavation of slopes, ditches, or roadways where riprap is to be placed shall be of sufficient depth to achieve finished grades shown on the plans or details. Riprap shall be in accordance with VESCH 3.19.

4. Cut and Fill Slope Preparation: Cut and fill slopes shall be constructed in a manner which will minimize erosion, in accordance with the following:

   1) All slopes steeper than 3:1 shall require surface roughening, either stair-step grading, grooving, furrowing, or tracking, if stabilized with vegetation, in accordance with VESCH 3.29.

   2) Areas with grades less than 3:1 shall have the soil surface lightly roughened and loosened to a depth of 4 inches prior to seeding.

   3) Areas which have been graded and will not be stabilized immediately shall be roughened to reduce runoff velocity until seeding takes place.

   4) Slopes with a stable rock face do not require roughening or stabilization.

3.2 CONSTRUCTION SEQUENCE

1. General: The CONTRACTOR shall establish a plan for construction sequence so as to minimize the effects of erosion.

3.3 INSTALLATION AND APPLICATION

1. Silt Fence: Silt fences shall be installed in accordance with VESCH 3.05 and the following:

   1) Installed height of silt fence shall not exceed 34 inches.

   2) Filter fabric splice joints shall occur only at a support post, minimum 6 inch overlap, and securely sealed.

   3) Posts shall be spaced a maximum of 10 feet on centers at the barrier location and driven securely into the ground (minimum of 12 inches). When extra strength fabric is used without wire support fence, post spacing shall not exceed 6 feet on centers.

   4) A trench shall be excavated approximately 4 inches wide and 4 inches deep along the line of posts and upslope from the barrier. Eight inches of fabric shall be extended into the trench. The trench shall be backfilled and the soil compacted over the filter fabric.

   5) For extra strength filter fabric installation utilizing closer post spacing, the wire mesh support fence may be eliminated. In such case, the fabric is attached to the upslope side of the posts using heavy-duty wire staples, minimum 1 inch long, or tie wires.

   6) Filter fabric shall not be stapled to existing trees.

   7) Silt fences shall be removed when they have served their useful purpose, but not before the upslope area has been permanently stabilized.

2. Stone and Riprap:

   1) Stone on the temporary construction entrance shall be in accordance with VESCH 3.02 Temporary Stone Construction Entrance.

2) Riprap shall be installed to the depth of 18 inches or as indicated on the plans, in accordance with VDOT 414. Stone shall be placed such that top of stone be within +/-2 inches of the finished grades shown on the plans or details.

3. Temporary Diversion Dike:

1) A temporary diversion ridge of compacted soil shall be located at the top and/or base of sloping disturbed areas in accordance with VESCH 3.09. Dike shall divert storm runoff from upslope drainage areas away from unprotected disturbed areas and slopes to a stabilized outlet. Dike shall divert sediment-laden runoff from a disturbed area to a sediment-trapping facility such as a sediment trap or sediment basin.

2) The minimum allowable height measured from the upslope side of the dike shall be 18 inches (except where dike is part of the proposed sediment trapping facility).

3) Side slopes shall be 1.5:1 or flatter. Minimum base width is 4.5 feet.

4) The channel behind the dike shall have positive grade to a stabilized outlet. Channel slope less than or equal to 2 percent shall require no stabilized outlet. Slope greater than 2 percent shall be stabilized in accordance with VESCH 3.17.

4. Temporary Sediment Trap:

1) A small temporary ponding area shall be constructed of earthen embankment with a gravel outlet across a drainage swale to detain sediment laden runoff from the disturbed areas to allow the majority of the sediment to settle out, as per VESCH 3.13. The sediment trap shall be constructed independently or in conjunction with temporary diversion dike.

2) The sediment trap shall have an initial storage volume as indicated on the plans, half of which shall be in the form of a permanent pool (see erosion control plan for required grading).

3) All cut and fill slopes shall be 2:1 or flatter (except for the excavated wet storage area which may be at a maximum 1:1 grade) in accordance with VESCH 3.13.

4) The outlet for the sediment trap shall consist of a coarse aggregate and rip rap section of the embankment located at the low point in the basin. The crest of the outlet shall be at least 1.0 feet below the top of the embankment during peak flow conditions. The outlet shall be constructed as shown in VESCH 3.13.

5) Sediment shall be removed and the trap restored to its original dimensions when the sediment has accumulated to 1/2 the designed wet storage volume of the trap. Sediment removed from the basin shall be deposited in a suitable area and in such a manner that it will not erode.

6) The structure shall be checked regularly to insure that it is structurally sound and has not been damaged by erosion or construction equipment. The height of the outlet shall be checked to insure that its center is at least one foot below the top of the embankment.

5. Sediment Trap Embankments:

1) The maximum height of the sediment trap embankment shall be measured from the low point. Minimum top widths and outlet heights for various embankment heights shall be in accordance with VESCH 3.13.

2) Sediment traps shall be removed after the contributing drainage area is stabilized. Sediment trap areas shall be restored to original or proposed final grades.

3) The area under the embankment shall be cleared, grubbed, and stripped of any vegetation and root mat to facilitate cleanout. The pool area shall be cleared.

4) Fill material for the embankments shall be free of roots or other woody vegetation, organic materials, large stones, and other objectionable material. The embankment shall be compacted in 6 inch layers by transversing with construction equipment.

5) The earthen embankment shall be seeded with temporary or permanent vegetation immediately after installation.

6) Construction operations shall be implemented in such a manner that erosion and water pollution are minimized.

7) All cut and fill slopes shall be 2:1 or flatter.

6. Construction Access Routes: Wherever construction vehicle access routes intersect paved public roads, provisions must be made to minimize the transport of sediment (mud) by runoff or vehicle tracking onto the paved surface (VESCH 3.02 and 3.03). Where sediment is transported onto a public road surface, the roads shall be cleaned thoroughly as necessary to prevent accumulation of dust, mud and siltation that create pollution or hazardous conditions. At the end of each day the paved surface shall be thoroughly cleaned to remove any/all evidence of dust, mud and siltation. Sediment shall be removed from roads by shoveling or sweeping and be transported to a sediment controlled disposal area. Street washing shall be allowed only after sediment is removed in this manner.

7. Construction Entrance: The construction entrance shall be stabilized in accordance with these specifications. Adequate stone shall be applied prior to and during construction to control dust, erosion, siltation and to maintain normal traffic.

8. Temporary Seeding: Provide temporary seeding in accordance with Section 32 92 19 – Seeding, and VESCH 3.31. Provide temporary seeding of any areas when planting time does not permit permanent seeding within 30 days after completion of subgrades and on soil stockpiles.

9. Straw Bale Barriers: Straw bale barriers shall be placed in a single row, lengthwise, along the contour and embedded in the soil to a depth of four inches in accordance with VESCH 3.04. Bales must be securely anchored in place by stakes or steel reinforcing-bars to prevent displacement. Barriers shall be inspected frequently and repair or replacement must be made promptly if needed.

10. Gravel Outlet Structures: The bases and side slopes of the gravel shall be placed so as to conform to the dike configuration. The invert of the outlet shall be not less than six inches lower than the top of the adjoining earth dike, and the gravel shall extend to the top of the dike. Discharge from the outlet structure shall be onto an already stabilized area or watercourse. The gravel outlet structure shall be inspected for silt accumulation after each runoff-producing rain. If structure ceases to function properly due to silt accumulation, the silt shall be removed and gravel shall be replaced.

3.3 MAINTENANCE

1. Duration: The erosion control measures shall be maintained by the CONTRACTOR until all work covered by this contract is completed and permanent stabilization of disturbed areas has been achieved.

2. Silt Fence:

1) Decomposed or ineffective silt fence or filter barriers shall be replaced promptly.

2) Sediment deposits shall be removed when deposits reach approximately one-half the height of the barrier. Sediment shall be removed from the site and disposed at an approved waste area.

3) Any sediment deposits remaining in place after the silt fence or filter barrier is no longer required shall be dressed to conform to the existing grade, then prepared and seeded.

3. Construction Entrance Inspection: The CONTRACTOR shall inspect the construction entrance periodically. The stone in the construction entrance shall be replaced when, in the opinion of the CONTRACTOR the AUTHORITY, VDOT or the Bedford County Department of Natural Resources an excessive amount of mud is being carried into the public right-of-way.

4. Disposal: All temporary erosion and sediment control measures shall be disposed of within 30 days after final site stabilization is achieved or after the temporary measures are no longer needed, unless otherwise authorized by the AUTHORITY. Trapped sediment and other disturbed soil areas resulting from disposition of temporary measure shall be permanently stabilized to prevent further erosion and sedimentation.

3.4 FIELD QUALITY CONTROL

1. General: All erosion control facilities shall be inspected by the CONTRACTOR weekly and after each significant rainfall. Inspection shall be performed daily during periods of prolonged precipitation. Any required repairs shall be made immediately.

END OF SECTION

SECTION 32 10 00 – BASES, BALLASTS, AND PAVEMENTS

PART 1 GENERAL

1.1 SUMMARY

1. Work Included: This Section includes specifications for the furnishing of all equipment, material, and labor in connection with concrete walks, curb and gutters, curb ramps, and paving of parking areas.

2. Related Sections: Additional Sections of the Documents which are referenced in this Section include:

   1) Section 01 33 00 – Submittal Procedures

   2) Section 31 00 00 – Earthwork

   3) Section 31 10 00 – Site Clearing

   4) Section 03 30 00 – Cast-in-Place Concrete

1.2 REFERENCES

1. General: The work shall comply with the most recent standards or tentative standards as published at the date of the contract and as listed in this specification using the abbreviation shown.

2. Department of Justice:

   1) Americans with Disabilities Act (ADA) Standards for Accessible Design

   2) Guidance on the 2010 ADA Standards for Accessible Design

3. American Concrete Institute (ACI):

   1) 301 Specifications for Structural Concrete

   2) 318 Building Code Requirements for Structural Concrete and Commentary

4. American Society for Testing and Materials (ASTM)

   1) A615 Standard Specification for Deformed and Plain Billet-Steel Bars for Concrete Reinforcement

   2) A1064 Standard Specification for Carbon Steel and Welded Wire Reinforcement, Plain and Deformed, for Concrete

   3) D1751 Standard Specification for Preformed Expansion Joint Fillers for Concrete Paving and Structural Construction (Nonextruding and Resilient Bituminous Types)

5. International Code Council (ICC)

   1) A117.1 Accessible and Usable Buildings and Facilities

5. Virginia Department of Transportation (VDOT) Road and Bridge Specifications:

   1) 208 Subbase and Aggregate Base Material

2)	210	Asphalt Materials
3)	211	Asphalt Concrete
4)	305	Subgrade and Shoulders
5)	308	Subbase Course
6)	309	Aggregate Base Course
7)	310	Tack Coat
8)	311	Prime Coat
9)	312	Seal Coat
10)	314	Penetration Surface Courses
11)	315	Asphalt Concrete Pavement
12)	502	Incidental Concrete Items
13)	504	Sidewalks, Steps, and Handrails

6. Virginia Department of Transportation (VDOT) Road and Bridge Standards:

1)	CG-2	Standard 6” Curb
2)	CG-3	Standard 4” Curb
3)	CG-6	Combination 6” Curb and Gutter
4)	CG-7	Combination 4” Curg and Gutter
5)	CG-12	Detectable Warning Surface, Type A, Perpendicular Application
6)	CG-12	Detectable Warning Surface, Type B, Parallell Application
7)	CG-12	Detectable Warning Surface, Type C, Parallel & Perpendicular Applications

1.3 QUALITY ASSURANCE

1. Restrictions: The VDOT Standards and Specifications shall define temperature restrictions, application procedures, mix components, and material references. All materials and application procedures shall be in accordance with VDOT Standards and Specifications.

2. Cast-in Place Concrete: Unless shown otherwise, cast-in-place concrete shall comply with ACI 318 and all applicable requirements of ACI 301. Cast –in-place concrete shall also comply with Section 03 30 00 - Cast-in-Place Concrete of these specifications.

3. Mix Designs: Do not commence placement of pavement until mix designs have been reviewed and approved by the AUTHORITY and all governmental agencies having jurisdiction, and until copies of the approved mix designs are at the job site and the batch plant.

4. Testing: The Geotechnical Engineer shall observe the following to determine if the work has been performed in accordance with these specifications:

1) Subgrade prior to placing base stone.

2) Base stone prior to laying asphalt.

3) Surface course application.

It is the CONTRACTOR's responsibility to coordinate inspections with the Geotechnical Engineer.

5. Approved Products List: The CONTRACTOR shall consult the AUTHORITY'S Approved Products List for acceptable materials and equipment.

1.4 Submittals

1. General: Submittals shall be made in accordance with Section 01 33 00 – Submittal Procedures at least two weeks prior to construction. Provide submittals for the following:

1) Concrete Mix Design

2) Steel Reinforcement

3) Welded Wire Reinforcement

2. Concrete Mix Designs:

1) Within 30 calendar days after award of the Contract, and prior to proceeding with any concrete work, secure concrete mix designs from the concrete supplier, and submit to the AUTHORITY for review and approval.

2) Distribute approved mix designs to testing laboratory, batch plant, job site, and governmental agencies having jurisdiction.

1.5 SITE CONDITIONS

1. Asphalt Paving Limitations:

1) Aggregate base course may be placed when air temperature is above 30 degrees F.

2) Apply prime and tack coats when ambient temperature is above 50 degrees F. (10 degrees C) and when temperature has not been below 35 degrees F. (1 degree C) for 12 hours immediately prior to application. Do not apply when base is wet or contains an excess of moisture.

3) Construct asphalt concrete base and surface course only when atmospheric temperature is above 40 degrees F. (4 degrees C) and when base is dry.

2. Portland Cement Concrete Limitations: Placement of concrete shall be restricted to conditions defined in Section 03 30 00 – Cast-in-Place Concrete.

1.6 MAINTENANCE

1. Streets: The CONTRACTOR shall maintain and repair existing streets as necessary during the construction period and provide for additional applications of compacted stone after completion of trenching and prior to paving, as required.

2. Roadway and Parking Areas: The CONTRACTOR shall maintain and repair the road and parking areas as necessary during the construction period.

PART 2 - PRODUCTS

2.1 PAVEMENT REPAIR

1. General: Pavement if disturbed, shall have the edges clean cut, then repaired with a bituminous concrete, VDOT Section 211 Type SM-9.5A at least 1 1/2 times the thickness of the original surface material but in no case less than 2 inches. Pavement seal or overlay, where required, for perpendicular pavement cuts or crossings shall have a minimum width equal to the width of the lane(s) affected. In cases of pavement cuts parallel to the road centerline, the entire width of the pavement shall have a pavement seal or overlay applied after initial patching, extending over the entire length of the patching plus 5 feet at each end as measured along the road centerline.

2. Pavement Seal for Surface Treated Pavement: Where required, pavement seal shall be performed in accordance with VDOT Sections 312 and 314 and shall consist of:

CRS-2	Liquid Asphalt	0.30 Gal/S.Y.
VDOT #8	Cover Stone	25 lbs/S.Y.

3. Pavement Overlay for Asphalt Concrete Pavement: Where required, pavement overlay shall be performed in accordance with VDOT Section 315 and shall consist of:

SM-9.5A	Asphalt Concrete	2 inches

2.2 GRAVEL ROADS AND SURFACING

1. General: Gravel roads, access drives, parking areas, or other gravel surfaces shall consist of a minimum of 6 inches of compacted VDOT Section 208 #21A aggregate unless shown otherwise on the plans.

2. Subgrade: Subgrade shall conform to VDOT Section 305.

2.3 PENETRATION SURFACE COURSES

1. General: Asphalt surface treatment, where required, shall comply with VDOT Section 314.

2. Subgrade: Subgrade shall conform to VDOT Section 305.

3. Base: Base shall consist of a minimum of 6 inches of compacted VDOT Section 208 #21A aggregate unless shown otherwise on the plans. Joints in existing pavement shall be overlapped and sealed.

4. Prime and Surface: Unless otherwise noted on plans or directed by VDOT, pavement shall consist of a prime coat and two surface coats as follows:

Prime Coat

CRS-2	Liquid Asphalt	0.30 Gal/S.Y.
VDOT #8	Cover Stone	25 lbs./S.Y.

Seal Coats (each)

CRS-2	Liquid Asphalt	0.30 Gal/S.Y.
VDOT #8	Cover Stone	25 lbs./S.Y.

2.4 ASPHALT CONCRETE PAVING AND SURFACING

1. General: All materials and methods for the construction of the travelway and parking paving shall be in accordance with applicable provisions of the VDOT specifications referred to hereinafter by section.

2. Subgrade: Subgrade shall conform to VDOT Section 305.

3. Base Courses:

   1) Aggregate base course shall consist of VDOT #21A aggregate base material and shall conform to VDOT Section 208.

   2) Prime coat shall consist of liquid asphalt material meeting the requirements of VDOT Section 311.

   3) Bituminous concrete base course shall consist of bituminous concrete base material VDOT Type BM-25.0 and conform to VDOT Section 211.

4. Intermediate Course:

   1) Tack coat shall consist of liquid asphalt material meeting the requirement of VDOT Section 310.

   2) Bituminous concrete intermediate course shall consist of bituminous concrete intermediate material VDOT Type IM-19.0A and conform to VDOT Section 211.

5. Surface Course and Pavement Overlay:

   1) Tack coat shall consist of liquid asphalt material meeting the requirements of VDOT Section 310.

   2) Bituminous concrete surface course or overlay shall consist of bituminous concrete surface material VDOT Type SM-9.5A and shall conform to VDOT Section 211.

2.5 ASPHALT WALKWAYS

1. General: All materials and methods for the work shall be in accordance with applicable provisions of the VDOT specifications referred to hereinafter by section.

2. Subgrade: Subgrade shall conform to VDOT Section 305.

3. Base Courses: Aggregate base course shall consist of VDOT 21-A aggregate base material and installation shall conform to VDOT Section 208.

4. Surface Course

   1) Tack coat shall consist of liquid asphalt material meeting the requirements of VDOT Section 310.

   2) Bituminous concrete surface course or overlay shall consist of bituminous concrete surface material VDOT Type SM-9.5A and shall conform to VDOT Sections 210 and 211.

2.6 CONCRETE PAVEMENT AND WALKS

1. General: All concrete shall be air entrained and comply with Section 03 30 00 – Cast-in-Place Concrete.

2. Formwork:

   1) General: Metal forms are preferred over wooden forms for the sidewalk installation. Form work shall be designed and constructed to insure that the finished concrete will conform accurately to the

indicated dimensions, lines, and elevations, and within the tolerances specified. Forms shall be of wood or steel, straight, of sufficient strength to resist springing during depositing and consolidating concrete. Wood forms shall be surfaced plank, 2 inch nominal thickness, straight and free from warp, twist, loose knots, splits or other defects. Wood forms shall have a nominal length of 10 feet. Radius bends may be formed with ¾ inch boards, laminated to the required thickness. Steel forms shall be channel-formed sections with a flat top surface and with welded braces at each end and at not less than two intermediate points. Ends of steel forms shall be interlocking and self-aligning. Steel forms shall include flexible forms and radius forming, corner forms, form spreaders, and fillers. Steel forms shall have a nominal length of 10 feet with a minimum of two welded stake pockets per form. Stake pins shall be solid steel rods with chamfered heads and pointed tips designed for use with steel forms.

2) Sidewalk Form: Sidewalk forms shall be of a height equal to the full depth of the finished sidewalk.

3) Curb and Gutter Forms: Curb and gutter outside forms shall have a height equal to the full depth of the curb and gutter. The inside form of curb shall have batter as indicated and shall be securely fastened to and supported by the outside form. Rigid forms shall be provided for curb returns, except that bender or thin plank forms may be used for curb or curb returns with a radius of 10 feet or more, where grade changes occur in the return, or where the central angle is such that a rigid form with a central angle of 90 degrees cannot be used. Back forms for curb returns may be made of 1 ½ inch benders, for the full height of the curb, cleated together.

3. Reinforcement:

1) General: Reinforcement steel shall be the size shown on the plans with all bars being billet steel, grade 60 (ASTM A615).

2) Welded Wire: Shall be placed in sidewalk areas and shall conform to ASTM A1064. Size shall be as indicated on the plans.

4. Expansion Joints:

1) General: Expansion joints are to be provided at locations shown on the plans or at other locations during construction as approved by the AUTHORITY. Joints shall be filled with a premolded expansion joint filler complying with ASTM D1751.

2) Characteristics: The expansion joint shall have the following properties:

a) Density of 25 pounds per cubic foot.

b) Asphalt content of 40 percent by volume.

c) Water absorption of 9.4 percent by volume.

d) Compressive strength of 475 psi at 50 percent deflection.

e) Joint fillers shall be non-extruding, ½ inch thickness complying with ASTM D1751 specifications.

3) Surface Sealant: Sealant for the expansion joint shall be an epoxidized polyurethane material or equal designed for dynamically moving joints to withstand extension up to 40 percent and compression up to 25 percent. Color shall match concrete surface. Sealant shall not extend above the surface elevation of walks.

PART 3 - EXECUTION

3.1 GENERAL

1. Grading: Uniformly smooth grade excavated areas, filled sections and adjacent transition areas. Subgrade shall be rolled and compacted prior to stone application. Earthwork shall be in accordance with Section 31 00 00 - Earthwork of these specifications.

2. Subbase and Base Courses: Aggregate base courses shall be placed in accordance with VDOT Sections 308 and 309. Coordinate with work of Section 31 00 00 – Earthwork, in the compaction of base course.

3. Protection: After final rolling, do not permit vehicular traffic on pavement until it has cooled and hardened.

4. Barricades: Erect barricades to protect paving from traffic until mixture has cooled enough not to become marked.

5. Surface Drainage: The surface of all paving work shall slope and drain surface water toward catch basins or swales. If water stands, paving shall be corrected to prevent standing water, subject to the AUTHORITY's approval.

6. Connections to Existing: Where new work connects to or adjoins existing sidewalk, curb and gutter, or pavement, existing surface shall be saw cut in a straight line at point of connection. Expansion joint material shall be installed, when applicable. Finished surfaces shall be continuous providing a smooth transition between existing and new work.

3.2 ASPHALT PAVING AND SURFACING

1. General. Asphalt concrete pavement construction shall be in accordance with the details on the plans and construction shall be in accordance with VDOT Section 315.

3.3 ASPHALT WALKWAY

1. Base Courses: Aggregate base course shall be mixed and placed to a depth of 4 inches in accordance with VDOT Section 309.

2. Surface Course:

    1) Protection: After final rolling, do not permit vehicular traffic on pavement until it has cooled and hardened.

    2) Barricades: Erect barricades to protect paving from traffic until mixture has cooled enough not to become marked.

    3) Surface Drainage: The surface of all paving work shall slope and drain surface water toward catch basins or swales. If water stands, paving shall be corrected to prevent standing water, subject to the AUTHORITY's approval.

3.4 CONCRETE PAVING AND WALKS

1. General: Construction shall be in accordance with Section 03 30 00 – Cast-in-Place Concrete, except as noted otherwise.

2. Subgrade: The subgrade shall be maintained in a smooth compacted condition in conformity with the required section and established grade until the concrete is placed. The subgrade shall be in a moist condition when concrete is placed. The subgrade shall be prepared and protected so as to produce a subgrade free from frost when the concrete is deposited.

3. Bedding: Concrete shall be placed on a minimum of 2 inches of VDOT Section 208 #21A stone or other stone approved by AUTHORITY's representative unless shown otherwise on the plans. Bedding shall be placed on firm, undisturbed subgrade.

4. Thickness: Concrete thickness shall match that of the existing concrete unless otherwise noted on the plans. Concrete shall, under no circumstances be less than 6 inches thick.

5. Width: Pavement and sidewalk width shall match that of the existing unless otherwise noted on the plans. The width of the sidewalk shall be measured from the back of the curb.

6. Slopes: Sidewalks, unless otherwise noted on the plans, shall slope toward drainageways at a minimum of ¼ inch to 1 foot.

7. Form Setting: Forms shall be carefully set to the indicated alignment, grade and dimensions. Forms shall be held rigidly in place by a minimum of three stakes per form placed at intervals not to exceed 4 feet. Corners, deep sections, and radius bends shall have additional stakes and braces, as required. Clamps, spreaders, and braces shall be used where required to insure rigidity in the forms. Forms shall be removed without injuring the concrete. Bars or heavy tools shall not be used against the concrete in removing the forms. Any concrete found defective after form removal shall be promptly and satisfactorily repaired at no cost to the AUTHORITY. Forms shall be cleaned and coated with form oil each time before concrete is placed. Wood forms may, instead, be thoroughly wetted with water before concrete is placed, except that with probable freezing temperatures, oiling is mandatory.

   1) Sidewalks: Forms for sidewalks shall be set with the upper edge true to line and grade with an allowable tolerance of 1/8 inch in any 10 foot long section. After forms are set, grade and alignment shall be checked with a 10 foot straightedge. Forms shall have a transverse slope (as indicated of a minimum ¼ inch per foot) with the low side adjacent to the roadway. Side forms shall not be removed for 12 hours after finishing has been completed.

   2) Curbs and Gutters: The forms of the front of the curb shall be removed not less than 2 hours nor more than 6 hours after the concrete has been placed. Forms back of curb shall remain in place until the face and top of the curb have been finished as specified for concrete finishing. Gutter forms shall not be removed while the concrete is sufficiently plastic to slump in any direction.

8. Expansion Joints: The CONTRACTOR shall install expansion joints at the locations shown on the plans. The distance between expansion joints shall not exceed 50 feet. Installation of the expansion joints shall be in accordance with the manufacturer's recommendations.

9. Control Joints: The CONTRACTOR shall divide concrete sidewalk into sections, the length of which match the existing sidewalk, by transverse control joints formed by a trowel or jointing tool. These control joints shall be at least 1/4 of the slab depth and 1/8-inch wide and match in appearance the joints in the existing sidewalk.

10. Handicapped Access Ramps: Handicapped access ramps shall comply with the Department of Justice ADA Standards for Accessible Design. All handicapped access ramp construction shall conform to ICC A117.1 using dimensions shown on VDOT Standard CG-12. Detectable warning in walking surface consisting of exposed aggregate or groves in conformance with ICC A117.1-4.27 is required.

11. Finish Surface: The finished surface including control joints and edging of the new concrete shall match that of the existing concrete. The finished surface shall exhibit a uniform texture free from irregularities. No water shall pond on the finished surface. Areas which exhibit excessive cracking, discoloration, form marks or tool marks or which are otherwise inconsistent with the overall appearances of the work shall be removed and replaced at no additional cost to the AUTHORITY.

12. Protection: CONTRACTOR shall protect uncured concrete from vandalism. Any damage to concrete work prior to acceptance by AUTHORITY shall be repaired by the CONTRACTOR at no expense to the AUTHORITY.

13. Weather: Concrete shall be protected from low temperatures in accordance with Section 03 30 00 – Cast-in-Place Concrete

14. Concrete Curb: Concrete curb shall be in accordance with VDOT Standards CG-2 or CG-3 as shown on the plans. Combination curb and gutter shall be in accordance with VDOT Standards CG-6 or CG-7 as shown on the plans. All concrete curbing shall be in accordance with VDOT Section 502.

15. Curb Ramps, Concrete Steps, and Sidewalk Transitions: Shall be in accordance with VDOT Section 504.

16. Construction Joints: Transverse joints for crack control shall be in accordance with VDOT Section 502.

17. Concrete Finishing: Except as may be shown otherwise on Drawings, provide the following finishes at the indicated locations. Finishes for concrete other than listed here shall be in accordance with Section 03 30 00 – Cast-in-Place Concrete.

    1) Trowel Finish: apply to curbs and gutters and other surfaces that are to be exposed to view, unless otherwise shown.

    2) Exposed Aggregate Finish: apply to all handicap ramps exceeding +/- 5 percent slope.

    3) Nonslip Broom Finish: apply to all concrete walks, steps and ramps except as noted above.

3.5 FIELD QUALITY CONTROL

1. Subgrade Testing: The subgrade shall be tested for grade and cross section by means of a template extending the full width of the sidwalk and/or curb and gutter. The subgrade shall be of materials equal in bearing quality to the subgrade under the adjacent pavement.

2. Thickness Deficiency: When measurements indicate that the completed concrete section is deficient in thickness by more than 0.25 inch the deficient section will be removed, between regularly scheduled joints, and replaced.

3. High Areas: In areas not meeting surface smoothness and plan grade requirements, high areas shall be reduced either by rubbing the freshly finished concrete with carborundum brick and water when the concrete is less than 36 hours old or by grinding the hardened concrete with an approved surface grinding machine after the concrete is 36 hours old or more. The area corrected by grinding the surface of the hardened concrete shall not exceed 5 percent of the area of any integral slab, and the depth of grinding shall not exceed ¼ inch. All pavement areas requiring grade or surface smoothness corrections in excess of the limits specified above shall be removed and replaced.

4. Remedial Work: Repair or replace deficient work at no additional cost to the AUTHORITY.

END OF SECTION

SECTION 32 31 13 - CHAIN LINK FENCES AND GATES

PART 1 GENERAL

1.1 DESCRIPTION

1. Work Included: Provide chain link fence system, pedestrian and drive through gates, where shown on the plans, as specified herein, and as needed for a complete and proper installation.

2. Related Sections: Additional Sections of the Documents which are referenced in this Section include:

   1) Section 01 33 00 - Submittal Procedures

   2) Section 01 66 00 – Product Delivery, Storage, and Handling Requirements

1.2 REFERENCES

1. General: The work shall comply with the most recent standards or tentative standards as published at the date of the contract and as listed in this specification using the abbreviation shown.

2. American Society for Testing and Materials (ASTM):

   1) A53 Standard Specification for Pipe, Steel, Black and Hot-Dipped, Zinc-Coated, Welded and Seamless

   2) A121 Standard Specification for Metallic-Coated Carbon Steel Barbed Wire

   3) A153 Standard Specification for Zinc-Coating (Hot-Dip) on Iron and Steel Hardware

   4) A392 Standard Specification for Zinc-Coated Steel Chain-Link Fence Fabric

   5) F626 Standard Specification for Fence Fittings

   6) F1043 Standard Specification for Strength and Protective Coatings on Steel Industrial Fence Framework

   7) F1083 Standard Specification for Pipe, Steel, Hot-Dipped Zinc-Coated (Galvanized) Welded, for Fence Structures

3. Chain Link Fence Manufacturers Institute (CLFMI):

   1) CLF-PM Product Manual

4. Virginia Department of Transportation (VDOT) Road and Bridge Specifications :

   1) 217 Hydraulic Cement Concrete

1.3 SUBMITTALS

1. General: Shall be in accordance with Section 01 33 00 – Submittal Procedures.

1.4 QUALITY ASSURANCE

1. General: Use an adequate number of skilled workmen who are thoroughly trained and experienced and who are familiar with the specified requirements and the methods needed for proper performance of the work in this section.

2. Approved Products List: The CONTRACTOR shall consult the AUTHORITY'S Approved Products List for acceptable materials and equipment.

1.5 DELIVERY, STORAGE, AND HANDLING

1. General: Shall be in accordance with Section 01 66 00 – Product Delivery, Storage, and Handling Requirements.

PART 2 PRODUCTS

2.1 MANUFACTURER

1. General: Fences and gates shall be as furnished by a manufacturer listed on the Approved Products List.

2.2 MATERIALS

1. General: Fencing shall be chain link topped with three strands of barbed wire strung on 45 degree angle arms and have an overall height as indicated on Standard Detail FE-1. Fencing shall conform to the current standards established by the CLSI CLS-PM Product Manual. All material shall be new and free from defects.

2. Fabric: Height of fabric shall be as indicated on Standard Detail FE-1, 2 inch mesh, 9 gauge chemically cleaned, and zinc coated conforming to ASTM A392 for Class 2 fabric.

3. Frame: Frames shall consist of ASTM F1043 Group 1A Heavy Industrial Fence Framework, Schedule 40 galvanized pipe per ASTM F1083 with dimensions and weights as indicated in Subsection 2.2.7. Line and corner posts shall be placed vertical at a spacing not to exceed 10 feet on center. All posts shall be anchored in concrete.

4. Gates: Gate frames shall be fabricated of galvanized steel with dimensions and weights as indicated in Subsection 2.2.7. Gates shall be swing type with three strand barbed wire top, supported with tension bars and bracing as required. Gate posts shall be sized to adequately support the gate over the span shown on the plans. Gate hinges and latches shall be of adequate strength for the gate provided and latches shall be suitable for securing with a padlock.

5. Miscellaneous Concrete: Concrete used to grout posts shall be in accordance with VDOT Section 217.

6. Fence: Total height of fence shall be as indicated on Standard Detail FE-1. Galvanized steel truss rods shall be provided as required at terminal and corner locations, a galvanized #7 W & M wire gauge tension wire shall be provided near the bottom of the fabric.

7. Dimension and Weights: Nominal diameter and minimum weights for all chain link posts, frames and gates shall be in accordance with the following table:

Use and Section	Outside Diameter Nominal, Inches	Minimum Wt., Per Foot Nominal Pounds
End, corner and pull post fabric height, 6'0" and less: round	2.375	3.65
Over 6'0" to 8'0": round	2.875	5.80
Gate posts for nominal width of gate, single or one leaf of double gate width 6'0" or less: round	2.875	5.80
Over 6'0" to 12'0": round	4.00	9.12
Over 12'0" to 18'0": round	6.625	18.99
Over 18'0" to 24'0"	8.625	28.58
Gate frames 6'0" or less in height and 8'0" or less in width: round	1.90	2.72
Gate frames over 6'0" in height-over 8'0" in width: round	1.90	2.72
Rails and post braces	1.660	2.27

8. Barbed Wire: Barbed wire shall be 12-1/2 gauge galvanized 4 point barbs, at 5 inch spacing. Barbed wire shall be stretched tight and adequately secured to each angle arm coated conforming to ASTM A392 for Class 2 fabric.

9. Top rails: Dimensions and weights shall be as indicated in Subsection 2.2.7 and shall comply with the following:

   1) Provide in manufacturer's longest length, with expansion type couplings approximately 6 inches long for each joint.

   2) Provide means for attaching top rail securely to each gate, corner, pull, slope, and end post.

10. Post brace assemblies: Dimensions and weights shall be as indicated in Subsection 2.2.7 and shall comply with the following:

    1) Provide at end and gate posts, and at both sides of corner, slope, and pull posts, with the horizontal brace located at mid-height of the fabric.

    2) Use 3/8 inches diameter rod with turnbuckle for diagonal truss.

11. Tension wire: Provide number 7 gauge galvanized coiled spring wire at bottom of fabric.

12. Post tops:

    1) Provide steel, wrought iron, or malleable iron, designed as weather tight closure cap.

    2) Provide one cap for each post with openings to permit through passage of top rail.

13. Gate Stretcher bars:

    1) Provide one-piece lengths equal to full height of fabric, with a minimum cross-section of 3/16 inch by 3/4 inch.

    2) Provide stretcher bar for each gate and end post, and two for each corner, slope, and pull post, except where fabric is woven integrally into the post.

14. Stretcher bar bands:

    1) Provide steel, wrought iron, or malleable iron, spaced not over 15 inches on centers, to secure stretcher bars to end, corner, pull, slope, and gate posts.

    2) Bands may be used also with special fittings for securing rails to end, corner, pull, slope, and gate posts.

2.3 GALVANIZING

1. General: Steel framework and appurtenances shall have galvanized finish with not less than the following weight of zinc per square foot:

    1) Pipe: 1.8 oz/sf inside and outside surfaces, complying with ASTM F1043 Group 1A, ASTM F1083.

    2) Hardware and accessories: Comply with Table I of ASTM A153

    3) Fabric: 2.0 oz/sf, complying with Class 2 of ASTM A392.

2.4 GATES

1. General: Gate shall comply with the following:

    1) Fabricate gate perimeter frames of tubular members.

    2) Provide additional horizontal and vertical members to assure proper operation of the gate, and for attachment of fabric, hardware, and accessories.

    3) Space so frame members are as indicated in Subsection 2.2.7.

    4) Fabricate gate frames with dimensions and weights as indicated in Subsection 2.2.7.

2. Fabrication: Shall comply with the following:

    1) Assemble gate frames by welding with special malleable or pressed steel fittings and rivets for rigid connections.

    2) Use same fabric as used in the fence.

    3) Install fabric with stretcher bars at vertical edges as a minimum.

    4) Attach stretchers to gate frame at not more than 15 inches on centers.

    5) Attach hardware with rivets or by other means which will provide security against removal and breakage.

6) Provide diagonal cross-bracing consisting of 3/8 inches diameter adjustable length truss rods on gates where required to provide frame rigidity without sag or twist.

3. Gate hardware:

1) Hinges:

Pressed or forged steel, or malleable iron, to suit the gate size: Non-lift-off type, offset to permit 180 degree opening.

Provide a minimum of 3 hinges for each leaf over 6 feet in nominal height.

2) Latches:

Provide forked type or plunger-bar type to permit operation from either side of the gate.

Provide padlock eye as integral part of latch.

3) Keeper: Provide keeper for vehicle gates, which automatically engages the gate leaf and holds it in the open position until manually released.

PART 3 EXECUTION

3.1 INSTALLATION

1. General: Posts shall be set in concrete bases as shown on Standard Detail FE-1. Top of bases shall be 2 inches above adjacent grade and troweled to a sloping finish. Posts shall be set plumb and true to line with a uniform grade following finished site grade. Fencing shall be installed in a neat, workmanlike manner with mesh and barbed wire stretched as tightly as possible. Gates shall be properly aligned to assure easy operation of latching and locking devices. The gate shall be installed in a neat, workmanlike manner and shall conform in all aspects with Standard Detail FE-1.

END OF SECTION

SECTION 32 91 19.13 – TOPSOIL PLACEMENT AND GRADING

PART 1 GENERAL

1.1 DESCRIPTION

1. Work Included: Prepare and place topsoil on a previously prepared subgrade.

2. Related Sections: Additional Sections of the Documents which are referenced in this Section include:

   1) Section 31 10 00 - Site Clearing

   2) Section 31 00 00 - Earthwork

1.2 REFERENCES

1. General: The work shall comply with the most recent standards or tentative standards as published at the date of the contract and as listed in these specifications using the abbreviations shown:

2. Virginia Department of Transportation (VDOT) – Road and Bridge Specifications:

   1) 602 Topsoil

3. Virginia Erosion and Sediment Control Handbook (VESCH):

   1) 3.30 Topsoiling

1.3 DELIVERY, STORAGE AND HANDLING

1. General: Topsoil shall be stripped and stockpiled in accordance with Sections 31 10 00 – Site Clearing and 31 00 00 - Earthwork and shall conform to the pertinent provisions of VESCH 3.30.

1.4 MAINTENANCE

1. Erosion: Employ erosion and sediment control practices as necessary to prevent soil erosion until adequate vegetative cover has developed. Topsoil which erodes shall be replaced with topsoil of like character until adequate vegetative cover has developed.

PART 2 PRODUCTS

2.1 MATERIALS

1. General: Topsoil shall conform to the pertinent provisions of VESCH 3.30 and VDOT Section 602, except as described herein.

2. Topsoil: Use all on-site stockpiled topsoil which is free from matted weeds and sod; clods and stones larger than 1 inch; toxic substances, litter, or other deleterious material.

   1) Topsoil must also be free of plant parts of Quackgrass, Johnsongrass, Mugwort, Netsedge, Poison Ivy, Canadian Thistle or other species which might compete with the desired plant growth.

   2) Topsoil shall not contain toxic substances harmful to plant growth, such as pesticide residues.

PART 3 EXECUTION

3.1 PREPARATION

1. General: Preparation of subgrade shall follow the processes described in VESCH 3.30 and VDOT Section 602.

2. Special: Topsoil shall be placed only upon friable graded surfaces which have been approved by the AUTHORITY. When subgrade is not properly friable, CONTRACTOR shall prepare the surface by discing or rototilling to a minimum depth of 2 inches.

3.2 APPLICATION

1. General: Application of topsoil shall follow the process as described in VESCH 3.30 and VDOT Section 602.

2. Distribution: Stockpiled topsoil shall be uniformly distributed over all denuded areas. Topsoil shall have a minimum thickness of 4 inches after natural settlement and light rolling, or greater depth if specified on the plan drawings. Topsoil shall conform to the grades and elevations as shown on the plans. Hand rake areas inaccessible to machine grading.

3. Compaction: Topsoil shall be compacted by one pass of a cultipacker, roller, or other approved equipment weighing 100-160 pounds per linear foot of roller.

4. Conditions: Topsoil shall not be placed when either the topsoil or the subgrade is frozen, excessively wet, extremely dry, or in a condition otherwise detrimental to proper grading.

3.3 QUALITY ASSURANCE

1. General: Topsoil which is inadequate or unsuitable for healthy plant growth shall be disposed of by the CONTRACTOR and replaced as necessary with topsoil similar in texture and composition to other on-site topsoil, at no additional cost to the AUTHORITY.

END OF SECTION

SECTION 32 92 19 - SEEDING

PART 1 GENERAL

1.1 DESCRIPTION

1. Work Included: Furnish and install lime, fertilizer, seed, mulch, and water on all disturbed areas on the site, in strict accordance with this Section and as shown on the drawings. Work in this section includes permanent seeding and, when required, temporary seeding.

2. Related Sections: Additional Sections of the Documents which are referenced in this Section include:

   1) Section 01 66 00 – Product Delivery, Storage, and Handling Requirements

   2) Section 32 91 19.13 – Topsoil Placement and Grading

1.2 REFERENCES

1. General: The work shall comply with the most recent standards or tentative standards as published at the date of the contract and as listed in this specification using the abbreviation shown.

2. Virginia Department of Transportation (VDOT) - Road and Bridge Specifications (VDOT):

   1) 244 Roadside Development Materials

   2) 602 Topsoil

   3) 603 Seeding

   4) 606 Soil Retention Coverings

3. Virginia Erosion and Sediment Control Handbook (VESCH):

   1) 3.31 Temporary Seeding

   2) 3.32 Permanent Seeding

   3) 3.35 Mulching

   4) 3.36 Soil Stabilization Blankets and Matting

1.3 SUBMITTALS

1. General: When requested by the AUTHORITY at any time during the landscape installation, CONTRACTOR shall submit the following in accordance with the Conditions of the Contract.

2. Hydroseeding: When hydroseeding is proposed, CONTRACTOR shall submit information on the mixture to be used including fertilizer, lime, and mulch.

3. Product Data: CONTRACTOR shall furnish labels or other appropriate product data for landscape materials. This may include but is not limited to: labels showing lime and fertilizer analysis; labels showing seed mixture contents and analysis; and labels from geotextile fabrics and similar materials.

4. Samples: CONTRACTOR shall furnish samples of landscape materials.

1.4 QUALITY ASSURANCE

1. General: Use adequate number of skilled workmen who are thoroughly trained and experienced in the necessary crafts and who are completely familiar with the specified requirements and the methods needed for proper performance of the work of this Section.

2. Equipment: Use equipment adequate in size, capacity, and numbers to accomplish the work of this Section in a timely manner.

3. Seed: Provide seed mixture in containers showing percentage of seed mix, year of production, net weight, date of packaging, and location of packaging. Certified seed inspected by the Virginia Crop Improvement Association shall be used for all permanent seeding whenever possible. Seed must meet published state standards and bear an official "Certified Seed" label.

4. Soil Amendments: Provide fertilizers, lime and other soil amendments in containers showing analysis, contents, and volume or weight.

1.5 DELIVERY, STORAGE, AND HANDLING

1. General: Shall be in accordance with Section 01 66 00 – Product Delivery, Storage, and Handling Requirements.

2. Delivery: All seed shall be kept cool, dry and free of contaminants during transportation. Seed and soil amendments shall be delivered in original, unopened containers with appropriate labels attached.

3. Storage: Seed which is not sown within 24 hours after delivery shall be stored as follows, unless other methods of storage are requested by the CONTRACTOR and approved by the AUTHORITY.

    1) Seed storage location shall be cool, dry, and sheltered from wind, traffic and construction activities.

    2) Fertilizers, lime, herbicides, insecticides, and other agricultural chemicals shall be stored separately from the seed.

4. Replacement: Seed which is heated, moistened, or otherwise damaged during transportation or storage shall be rejected and replaced by the CONTRACTOR at no additional cost to the AUTHORITY. Seed in damaged or opened packaging shall be rejected and replaced by the CONTRACTOR at no additional cost to the AUTHORITY.

1.6 PROJECT CONDITIONS

1. General: For areas specifically designated on the plans, the CONTRACTOR shall analyze the topsoil and base soil amendment application rates on recommendations received. For areas not specifically designated on the plans, the CONTRACTOR may elect to analyze topsoil and base application rates on recommendations received, in lieu of rates specified herein. Soil analysis test reports and soil amendment application rate recommendation shall be submitted and approved prior to the commencement of seeding operations.

2. Soil Analysis: When performed, the CONTRACTOR shall have the topsoil analyzed by a qualified laboratory or county extension service for pH and nutrient levels. The soil test report shall provide fertilizer and lime recommendations for turf. One sample shall be gathered per acre of landscaped area, but no less than three samples shall be gathered, unless directed otherwise by the AUTHORITY. The CONTRACTOR shall provide a copy of the report to the AUTHORITY.

3. Farm Land and Special Conditions: For areas of improved pasture, hay fields, or other perennial crops, CONTRACTOR shall seed area to match adjacent undisturbed areas or seed area in a manner acceptable to the property owner.

1.7 WARRANTY

1. General: CONTRACTOR shall perform periodic inspection of the seeded areas during the warranty period.

2. Warranty Maintenance: CONTRACTOR shall provide, during the warranty period, maintenance as necessary to establish a healthy uniform stand of turf. CONTRACTOR's maintenance shall generally include overseeding, application of amendments, and repair of erosion as necessary.

1.8 MAINTENANCE

1. General: Seeded areas shall be maintained as necessary to establish a healthy, uniform stand of turf until substantial completion. Maintenance shall consist of watering, mowing, fertilizing, weed removal, disease and insect removal, and where erosion occurs, repair.

PART 2 PRODUCTS

2.1 MATERIALS

1. Grass seed: Seed shall comply with all applicable state and federal seed laws and contract requirements. Seed shall comply with provisions of VESCH 3.31 or 3.32, VDOT Section 244, and Bedford County Natural Resources Seeding Requirements (latest version).

   1) Grass seed shall consist of pure, live, certified grass seed mixture, of the latest crop, and containing weed seed less than 0.5 percent by weight of the total mixture.

   2) Seed mixture(s) for permanent seeding shall be selected from the following table, based on the time of year during which seeding is to occur. Numbers indicate pounds of seed per acre.

	Feb. 1- May 15	May 16- July 31	Aug. 1- Sept. 15	Sept. 16 – Jan. 31
Grass Type	Mixture A	Mixture B	Mixture C	Mixture D
Tall Fescue (*Festuca arundinacea*)	100	120	100	120
Annual Ryegrass *(Lolium multiflorum)*	15	-	15	-
Foxtail Millet *(Setaria italica)*	-	10	-	-
Rye *(Secale cereale)*	-	-	-	10
Red Clover *(Trifolium pratense)*	2	2	2	2
TOTAL WEIGHT	117	132	117	132

3) Seed mixture(s) for temporary seeding shall consist of the appropriate mixture in the table below. Selection of the particular mixture shall be based on the time of year during which seeding is to occur. Numbers indicate pounds of seed per acre.

TEMPORARY SEEDING	Winter	Summer
Seed Type	Mixture A	Mixture B
Rye *(Secale cereale)*	40	-
Foxtail Millet *(Setaria italica)*	-	40
Annual Ryegrass *(Lolium multifolium)*	40	40

2. Fertilizer: Fertilizer shall be commercially-prepared and granular. Fertilizer shall be uniform in composition, dry, and free-flowing. Fertilizer requirements shall be the same for both permanent and temporary seeding.

   1) Fertilizer must comply with pertinent provisions of VESCH,VDOT Section 244, and Bedford County Natural Resources Seeding Requirements. Fertilizer shall conform to all applicable state and federal regulations.

   2) Fertilizer for seeding shall be complete with a 10-18-10 analysis (percentages by weight of nitrogen, phosphorous and potassium, respectively).

3. Mulch: Oat or wheat straw shall be used. Straw shall be dry and free from weeds, weed seeds, and foreign matter detrimental to plant life. Mulch shall conform to VDOT Section 244.

4. Water: Water shall be potable or clean water free of contaminants harmful to plant growth. Brackish water shall not be used.

5. Lime: Unless otherwise noted, lime shall be agricultural ground or pulverized limestone.

PART 3 EXECUTION

3.1 PREPARATION

1. General: Rake the soil surface to remove all root clumps, stones, and debris 1 inch or greater in size. True up all depressions and edges. Soil in the area to be seeded shall be prepared in accordance with VESCH 3.30, 3.31 and 3.32; and VDOT Section 602 and 603.

2. Grading: Establish a smooth grade ready to receive seed. Finish grade must conform to the grades and elevations as shown on the plans.

3. Topsoil: Topsoil shall be in place for all areas to be permanently seeded in accordance with Section 32 91 19.13 – Topsoil Placement and Grading.

3.2 APPLICATION

1. General: Seeding shall conform with VESCH 3.31 or VESCH 3.32, VDOT Section 603, and Bedford County Natural Resources Seeding Requirements. Initial seeding shall consist of uniformly applying seed,

mulch, and water on prepared areas. Over-seeding shall consist of applying seed, mulch, and water to areas previously seeded.

2. Lime: Apply lime uniformly at the rate of 2 tons per acre or as recommended in the soil test report, using approved application method. After application, the soil shall be loosened to a depth of 4 inches by disking, harrowing, or other approved method. Washed and disturbed areas shall be final dressed prior to applying fertilizer. Lime application is not required for areas to be temporarily seeded for periods less than 4 months.

3. Fertilizer: Incorporate fertilizer into top 4 inches of soil by discing or power rake.

   1) For areas to be permanently seeded, apply fertilizer uniformly at the rate of 1500 pounds per acre.

4. Seeding Time: Seed shall be sown during favorable weather conditions. Seed shall not be sown when the ground is frozen or when air temperatures are below freezing. Do not sow under windy conditions.

5. Seeding: Sow seed uniformly, dividing the selected rate in half and sowing in cross directions using a mechanical spreader. Do not allow seed to drift into adjacent planting beds.

6. Raking: After machine sowing, lightly cover seed and provide a smooth surface by raking.

7. Mulching: Mulching shall comply with the pertinent provisions of VESCH 3.35 and VDOT Section 603.

   1) Apply mulch within 48 hours of sowing seed. Apply mulch of loose straw uniformly at the rate of 80 bales per acre. Mulch shall be anchored to the seeded surface by discing, netting, or by other methods approved by the AUTHORITY.

8. Watering: Immediately after completion of mulching, apply water thoroughly to mulch and seedbed with a fine mist spray. Water heavily once per week during dry weather until a thick cover of grass is established.

9. Hydroseeding: Hydroseeding may be used as an alternative application method upon approval of the AUTHORITY. The use of alternative soil amendments and mulch will be considered provided the application rates comply with the rates specified in this section.

END OF SECTION

SECTION 33 03 00 – UTILITY PIPE AND MATERIALS

PART 1 GENERAL

1.1 DESCRIPTION

1. Work Included: The work in this section shall include the furnishing, installation, and testing of all pipe, fittings and structures, and furnishing the equipment, labor, and appurtenances for the installation of piped utilities. All work shall be completed as shown on the plans and as specified in related sections and hereunder.

2. Related Sections: Additional Sections of the Documents which are referenced in this Section Include:

   1) Section 01 33 00 - Submittal Procedures

   2) Section 01 66 00 – Product Delivery, Storage, and Handling Requirements

   3) Section 33 04 00 - Valves and Cocks

   4) Section 31 23 33- Trenching and Backfilling

   5) Section 33 10 00 - Water Utilities

   6) Section 33 30 00 – Sanitary Sewerage Utilities

1.2 REFERENCES

1. General: The Work shall comply with the most recent or tentative standards as published at the date of the Contract and as listed in the Specifications using abbreviations shown.

2. American Association of State Highway and Transportation Officials Publications (AASHTO):

   1) Section 16 — Steel Tunnel Liner Plates Standard Specifications for Highway Bridges.

   2) M 36 — Corrugated Steel Pipe, Metallic – Coated, for Sewers and Drains

   3) M 170 — Reinforced Concrete Culverts, Storm Drain, and Sewer Pipe

   4) M 196 — Corrugated Aluminum Pipe for Sewers and Drains

   5) M 252 — Corrugated Polyethylene Drainage Pipe

   6) M 294 — Corrugated Polyethylene Pipe, 300- to 1500-mm (12- to 60-in.) Diameter

3. American Society of Sanitary Engineers (ASSE):

   1) 1011 — Performance Requirements for Hose Connection Vacuum Breakers

4. American Society for Testing and Materials (ASTM):

   1) A53 — Standard Specification for Pipe, Steel, Black and Hot-Dipped, Zinc-Coated, Welded and Seamless

2)	A74	Standard Specification for Cast Iron Soil Pipe and Fittings
3)	A123	Standard Specification for Zinc (Hot-Dip Galvanized) Coatings on Iron and Steel Products
4)	A139	Standard Specification for Electric-Fusion (Arc)-Welded Steel Pipe (NPS 4 and over)
5)	A153	Standard Specification for Zinc Coating (Hot-Dip) on Iron and Steel Hardware
6)	A307	Standard Specification for Carbon Steel Bolts and Studs, 60,000 psi Tensile
7)	A312	Standard Specification for Seamless, Welded, and Heavily Cold Worked Austenitic Stainless Steel Pipes
8)	A449	Standard Specifications for Hex Cap Screws, Bolts and Studs, Heat Treated, 120/105/90 ksi Minimum Tensile Strength, General Use
9)	A563	Standard Specification for Carbon and Alloy Steel Nuts
10)	A568	Standard Specification for Steel, Sheet, Carbon, Structural, and High-Strength, Low-Alloy, Hot-Rolled and Cold-Rolled, General Requirements for
11)	A760	Standard Specification for Corrugated Steel Pipe, Metallic Coated for Sewers and Drains
12)	B88	Standard Specification for Seamless Copper Water Tube
13)	B745	Standard Specification for Corrugated Aluminum Pipe for Sewers and Drains
14)	C443	Standard Specification for Joints for Concrete Pipe and Manholes, Using Rubber Gaskets
15)	C476	Standard Specification for Grout for Masonry
16)	C1173	Standard Specification for Flexible Transition Couplings for Underground Piping Systems
17)	D1149	Standard Test Methods for Rubber Deterioration-Cracking in an Ozone Controlled Environment
18)	D1784	Standard Specification for Rigid Poly (Vinyl Chloride) (PVC) Compounds and Chlorinated Poly (Vinyl Chloride) CPVC Compounds.
19)	D1785	Standard Specification for Poly (Vinyl Chloride) Plastic Pipe, Schedules 40, 80, and 120
20)	D2241	Standard Specification for Poly (Vinyl Chloride) (PVC) Pressure-Rated Pipe (SDR Series)
21)	D2412	Standard Test Method for Determination of External Loading Characteristics of Plastic Pipe by Parallel-Plate Loading.

22) D2466 Standard Specification for Poly (Vinyl Chloride) (PVC) Plastic Pipe Fittings, Schedule 40

23) D2467 Standard Specification for Poly (Vinyl Chloride) (PVC) Plastic Pipe Fittings, Schedule 80

24) D2564 Standard Specification for Solvent Cements for Poly (Vinyl Chloride) (PVC) Plastic Piping Systems

25) D2737 Standard Specification for Polyethylene (PE) Plastic Tubing

26) D2846/D2846M Standard Specification for Chlorinated Poly (Vinyl Chloride) (CPVC) Plastic Hot-and-Cold Water Distribution Systems

27) D3034 Standard Specification for Type PSM Poly (Vinyl Chloride) (PVC) Sewer Pipe and Fittings

28) D3035 Standard Specification for Polyethylene (PE) Plastic Pipe (DR PR) Based on Controlled Outside Diameter

29) D3139 Standard Specification for Joints for Plastic Pressure Pipes Using Flexible Elastomeric Seals

30) D3212 Standard Specification for Joints for Drain and Sewer Plastic Pipes Using Flexible Elastometric Seals

31) D3350 Standard Specification for Polyethylene Plastics Pipe and Fittings Materials

32) D5926 Standard Specification for Poly (Vinyl Chloride) (PVC) Gaskets for Drain, Waste, and Vent (DWV), Sewer, Sanitary, and Storm Plumbing Systems

33) F441 Standard Specification for Chlorinated Poly(Vinyl Chloride) (CPVC) Plastic Pipe, Schedules 40 and 80.

34) F477 Standard Specification for Elastomeric Seals (Gaskets) for Joining Plastic Pipe

35) F493 Standard Specification for Solvent Cements for Chlorinated Poly (Vinyl Chloride) (CPVC) Plastic Pipe and Fittings

36) F679 Standard Specification for Poly (Vinyl Chloride) (PVC) Large-Diameter Plastic Gravity Sewer Pipe and Fittings

37) F714 Standard Specification for Polyethylene (PE) Plastic Pipe (DR-PR) based on Outside Diameter

38) F1417 Standard Practice for Installation Acceptance of Plastic Non-pressure Sewer Lines Using Low-Pressure Air

39) F1483 Standard Specification for Oriented Poly(Vinyl Chloride), PVCO, Pressure Pipe

4. American Water Works Association (AWWA):

1) C104 Cement-Mortar Lining for Ductile-Iron Pipe and Fittings

2) C110 Ductile-Iron and Gray-Iron Fittings

3) C111 Rubber-Gasket Joints for Ductile-Iron Pressure Pipe and Fittings

4) C150 Thickness Design of Ductile-Iron Pipe

5) C151 Ductile-Iron Pipe, Centrifugally Cast

6) C153 Ductile-Iron Compact Fittings for Water Service

7) C220 Stainless Steel Pipe ½ inch (13 mm) and Larger

8) C226 Stainless Steel Fittings for Water Works Service, sizes ½ -inch Through 72 inches (13 mm – 1800mm)

9) C600 Installation of Ductile-Iron Water Mains and their Appurtenances

10) C605 Underground Installation of Polyvinyl Chloride (PVC) and Molecularly Oriented Polyvinyl Chloride (PVCO) Pressure Pipe and Fittings

11) C900 Polyvinyl Chloride (PVC) Pressure Pipe and Fabricated Fittings, 4 in. - 60 in. (100 mm -Through 1,500 mm)

12) C901 Polyethylene (PE) Pressure Pipe And Tubing, 1/2 Inch (13 mm) Through 3 Inches (76 mm), For Water Service.

13) C906 Polyethylene (PE) Pressure Pipe And Fittings,-4 In. (100 mm) - 65 In. (1,650 mm), for Waterworks

14) C909 Molecularly Oriented Polyvinyl Chloride (PVCO) Pressure Pipe, 4 In. - 24 In. (100 mm - 600 mm), for Water, Wastewater, and Reclaimed Water Service.

5. American National Standard Institute (ANSI)/American Society of Mechanical Engineers (ASME):

1) B 16.1 Gray Iron Pipe Flanges and Flanged Fittings, Class 25, 125, 250

2) B 16.22 Wrought Copper and Copper Alloy Solder-Joint Pressure Fittings

3) B 16.42 Ductile Iron Pipe Flanges and Flanged Fittings; Classes 150 and 300

6. National Sanitation Foundation - Standards (NSF):

1) 14 Plastic Piping System Components and Related Materials

2) 61 Drinking Water System Components

3) 372 Drinking Water System Components – Lead Content

7. Virginia Statewide Fire Prevention Code VR 394-01-6

1) VR 394-01-6 Virginia Statewide Fire Prevention Code

8. Virginia Administrative Code

   1) 9 VAC 25-740 Virginia Department of Environmental Quality (DEQ) *Water Reclamation and Reuse Regulation*

   2) 9 VAC 25-790 Virginia Department of Environmental Quality (DEQ) *Sewage Collection and Treatment (SCAT) Regulations*

   3) 12VAC5-590 Virginia Department of Health (VDH) *Waterworks Regulations*

1.3 QUALITY ASSURANCE

1. Quality Assurance: All pipe and fittings shall be new, free from defects or contamination and shall, whenever possible, be the standard product of a single manufacturer.

2. Manufacturers Limitations: Products used in the work of this section shall be manufactured in the U.S. where possible by manufacturers regularly engaged in production of similar items.

3. Approved Products List: The CONTRACTOR shall consult the AUTHORITY'S Approved Products List for acceptable materials and equipment.

1.4 SUBMITTALS

1. General: Submittals shall be in accordance with Section 01 33 00 - Submittal Procedures.

1.5 DELIVERY, STORAGE AND HANDLING

1. General: Delivery, Storage, and Handling shall be in accordance with Section 01 66 00 – Product Delivery, Storage, and Handling Requirements.

PART 2 PRODUCTS

2.1 GENERAL

1. Pipe, fittings, and appurtenances for potable water applications shall comply with NSF 14 (plastic), NSF 61, and NSF 372.

2.2 PIPE

1. Polyvinyl Chloride (PVC) Pipe: Buried PVC pipe shall be color-coded to the relevant applications: Blue = potable water and Green = sewer. PVC pipe shall be made from clean, virgin, PVC compound conforming to ASTM D1784, and meet the following requirements:

   1) Potable Water Pressure Pipe:

      a) 4" – 12" Water Pipe (C 900): PVC pipe shall be DR series bell and spigot pressure pipe with rubber gasket joints conforming to AWWA C 900 and ASTM D2241, rated at a minimum working pressure of 200 psi, or as otherwise specified on the plans. Joints shall be manufactured in accordance with ASTM D3139 and ASTM F477. Fittings shall be ductile iron, mechanical joint type per this section paragraph 2.2.3 of the specifications. Pipe shall be certified by the NSF 61 and the same shall be indicated on the pipe. Pipe shall be furnished in 20 foot laying lengths.

b) 4" – 12" Water Pipe (C 909): PVC pipe shall be DR series bell and spigot pressure pipe with rubber gasket joints conforming to AWWA C 909 and ASTM1483, rated at a minimum working pressure of 200 psi, or greater where specified on plans. Joints shall be manufactured in accordance with ASTM D3139 and ASTM F477. Fittings shall be ductile iron, mechanical joint type per this section paragraph 2.2.3 of the specifications. Pipe shall be certified by the NSF 61 and the same shall be indicated on the pipe. Pipe shall be furnished in 20 foot laying lengths.

c) Smaller than 4" Diameter Water Pipe: PVC pipe smaller than 4" diameter shall be SDR series, rated at a minimum working pressure of 250 psi, or as otherwise specified on the plans. Pipe shall be manufactured in accordance with ASTM D2241. Pipe shall have NSF 61 certification and the same shall be indicated on the pipe. Joints shall be manufactured with ASTM D3139. Rubber rings shall be manufactured in accordance with ASTM F477.

2) Force Main and Other Pressure Pipe: Pipe shall be SDR series bell and spigot PVC pressure pipe conforming to ASTM D2241 with a rubber sealing ring locked in place to allow expansion and contraction but prevent displacement during assembly. Pipe shall be rated at pressure specified on plans, with minimum pressure rating to be the greater of 150 psi or 1.5 multiplied by the maximum working pressure as designed. Fittings shall be ductile iron, mechanical joint type per this Section Paragraph 2.2.3 or PVC fittings, for diameters 4" and less, supplied by the same manufacturer as the pressure pipe. Glued PVC fittings shall be factory glued.

3) Gravity Sewer Pipe: Pipe shall be SDR series bell and spigot PVC pipe with a rubber sealing ring locked in place to allow expansion and contraction but prevent displacement during assembly. Pipe shall conform to ASTM D1784 and ASTM D3034 for <18-inches (with cell classification of 12454 or 12364) and ASTM F679 for 18 to 60-inch pipe. Pipe stiffness at 5 percent deflection shall exceed 46 psi when tested in accordance with ASTM D2412. Joints shall be designed to pass when tested in accordance with ASTM D3212 and ASTM F477.

a) Gravity sewer pipe 12-inches and smaller shall have minimum slope of 0.40% or greater. Gravity sewer pipe larger than 12-inches shall have minimum slope in accordance with DEQ *SCAT Regulations* (9 VAC 25-790). See Table 1 of this section. All terminal lines with less than 5 residential connections shall have a slope of 1% or greater.

Department of Environmental Quality (DEQ)
Sewer Collection and Treatment (SCAT) Regulations

Table 1

Sewer Size	Minimum Slope in Feet per 100 Feet
	Nonsettled Sewage
14 inch	0.17
15 inch	0.15
16 inch	0.14
18 inch	0.12
21 inch	0.10
24 inch	0.08
27 inch	0.067
30 inch	0.058
36 inch	0.046

4) Drain, Waste, and Vent: Pipe shall be Schedule 80, Type 1, Grade 1, plain end conforming to ASTM D2467, ASTM D1784, and ASTM D1785 with solvent weld joints and fittings.

5) Interior Water Pipe: Interior potable water plumbing shall be Schedule 40 Chlorinated Polyvinyl Chloride (CPVC) pipe conforming to ASTM D1784, ASTM F441, and ASTM D2846/D2846M with solvent weld joints.

6) Miscellaneous Pipe: Pipe for miscellaneous applications and where specified on the plans shall be Schedule 80 conforming to ASTM D1785 with solvent weld joints.

2. Ductile Iron Pipe: Ductile iron pipe (DIP) and fittings shall meet or exceed the following requirements:

1) Specifications:

a) Pipe and fittings shall be the diameter shown on the plans.

b) Pressure Class 350 in accordance with AWWA C150.

c) Cast in accordance with AWWA C151.

d) Thickness Class 50 in accordance with AWWA C150 or approved equal.

e) Pipe shall be in nominal 18-foot or 20-foot lengths.

2) Joints

a) All lines below grade shall be constructed with push-on joints and mechanical joints at fittings. Pipe lines inside of building and exterior non-buried lines shall be with flanged joints.

b) Rubber gasket joints shall be in accordance with AWWA C111.

3) Linings and Coatings

a) Cement lining in accordance with AWWA C104 except on air piping or as otherwise noted.

b) All ductile iron pipe, fittings, and accessories below grade or inside of casings shall have an exterior coat of a bituminous material.

c) All ductile iron pipe used for sewer applications must have interior lining.

3. Smooth Wall Metallic Pipe, Tubing, and Casing: Smooth wall metallic pipe, tubing, and casing shall meetor exceed the following requirements:

1) Stainless Steel Pipe: Stainless steel pipe shall be welded, of material that conforms to ASTM A312 and AWWA C220 of size as shown on the plans. Stainless steel pipe for potable water applications shall conform to NSF 61 and NSF 372.

2) Copper Tubing: All copper tubing shall meet the requirements of ASTM B88 for Type “L” copper, hard drawn for above ground and Type “K” hard drawn for services. When copper tubing is used for services, it shall only be installed on the property owner’s side of the meter box. Copper tubing for services shall have the ability to be flared. Copper tubing for potable water applications shall conform to NSF 61 and NSF 372.

3) Steel Casing Pipe:

a) For water or sewer service line road crossings only, casing material other than steel may be used with VDOT approval.

b) Steel casing pipe shall conform to the materials standards of ASTM A139, Grade B, or approved equal. Only new prime pipe shall be permitted. The pipe shall have an exterior coat of bituminous material. Casing pipe and joints shall be of leak proof construction so as to prevent leakage of any substance from the casing throughout its length.

1. Casing pipe thickness:
   a. In VDOT rights-of-way, minimum wall thickness shall be 0.500 inch or ASTM A53 Standard Weight Class per 2016 VDOT Road and Bridge Specifications Section 232.02c, and shall have beveled edges suitable for welding or be threaded.
   b. In railroad installations, the thickness of the casing shall conform to the requirements of the specific railroad and governing permit.
   c. Unless otherwise specified or required by a governing permit, minimum casing wall thickness shall be in accordance with Table A shown in this Section.
2. Casing pipe size shall be in accordance with Table B shown in this Section.

Table A

Casing Size	Casing Wall Thickness	
	VDOT	***Other****
Less than 18”	0.500”	*0.250”
18”	0.500”	*0.312”
24”	0.500”	*0.375”
30”	0.500”	0.500”
36”	0.500”	0.500”
48”	0.500”	0.500”

*Where jurisdiction governing roadways has differing requirements, the minimum wall thickness shall follow the greater of the jurisdiction requirements and Table A.

Table B

Carrier Pipe Size	Steel Casing Pipe Size
≤ 2”	4”
4”	8” only
6”	12” only
8”	16” to 20”*
10”	18” to 22”*
12”	20” to 24”*
20”	30” to 36”*

*Steel casing pipe size shall be in accordance with Engineer’s or casing spacer manufacturer’s calculations based on outside diameter of carrier pipe material, pipe bells, joint restraints, or other fittings through casing pipe. Casing pipe size shall be sufficient to allow installation without damage or deflection of the casing spacer to maintain electrical/conducting isolation of the carrier and casing pipes.

4. Polyethylene (PE) Pipe:

1) High Density Polyethylene (HDPE) Pressure Pipe for Directional Drilling: Polyethylene plastic pipe 4-inches and larger used as carrier pipe or casing pipe shall be high density polyethylene pipe made from PE 4710 resins, SDR-9 DIPS with minimum pressure class of 200 psi, meeting the applicable requirements of ASTM F714 or ASTM D3350 and AWWA C906 with PE 3608 and cell classification 345464E.

2) Polyethylene (PE) Pipe and Tubing: Polyethylene (PE) pipe and tubing shall meet or exceed the following requirements. Fittings shall be as specified in this section, paragraph 2.2.6.Water Service Polyethylene (PE) Pressure Tubing: PE tubing shall be produced with PE 4710 bi-modal resins. It shall also be SDR-9 with a minimum pressure class of 200 psi, copper tube size (CTS), O.D. controlled, meeting the requirements of AWWA C 901 and ASTM D2737.

3) Water service PE tubing shall be 2" and smaller in diameter. Tubing shall be certified according to NSF 61 and the same shall be indicated on the pipe. Tubing shall be Endopure by Endot Industries, Inc. or equal. Pipe stiffeners/inserts for PE tubing shall be based on manufacturer's recommendation corresponding to the specific brand of tubing.

4) Low Pressure Force Main Service Polyethylene (PE) Pressure Tubing: PE tubing shall be produced with PE 4710 bi-modal resins. It shall be SDR-9 or SDR-11, with a minimum pressure class of 200 psi, iron pipe size (IPS), O.D. controlled, meeting the requirements of ASTM D3035. Tapped tees with approved valves and boxes shall be installed with the force main at all foreseeable points of connection. Pipe stiffeners/inserts for PE tubing shall be based on manufacturer's recommendation corresponding to the specific brand of tubing.

5. Cleanouts:

1) Cleanouts: Piping and fittings shall be constructed of the same materials as the main line sewer and shall conform to the appropriate Standard Detail CO-series. Reconnecting to existing laterals shall be accomplished with proper watertight transition couplings as required.

6. Polyethylene Encasement:

1) In areas with aggressive soils, provide polyethylene encasement for ductile iron piping and valves to prevent contact between the pipe and surrounding bedding material and backfill.

2) Polyethylene shall be supplied in tubes for water main and in sheet material for valve coverage.

3) Polyethylene encasement materials and installation shall be in accordance with the requirements of AWWA C105.

2.3 FITTINGS

1. General: Pipe ends shall be prepared for installation in accordance with the manufacturer's directions. Fittings shall be rated to the pressure or thickness class equal or greater than that of the connecting pipe.

2. Polyvinyl Chloride (PVC) Fittings: Polyvinyl chloride fittings shall be made from clean, virgin, PVC compound conforming to ASTM D1784 and shall conform to the following requirements:

1) Gravity Sewer: Fittings shall be gasketed bell type of the same material as the sewer main pipe and conforming to ASTM D3034 Plugs or caps used shall be those manufactured specifically for the type of pipe used. They shall be secured such that they will be watertight and will withstand the internal pressure applied by air or exfiltration testing.

2) Force Main Sewer: PVC fittings 4" and less shall be supplied by the same manufacturer as the pressure pipe and manufactured specifically for the type of pipe used. Glued fittings shall be factory glued.

3) Drain, Waste, and Vent: Fittings shall be Schedule 80 socket type conforming to ASTM D2467.

4) Solvent Cement: Solvent cement for use on PVC pipe and fittings shall conform to ASTM F493 ASTM D2564, or ASTM D2846/D2846M as appropriate for pipe used.

5) Pressure Pipe: PVC fittings greater than 4-inch are not allowed.

3. Ductile Iron Fittings: Ductile iron fittings shall conform to AWWA C104, AWWA C110 for standard body and AWWA C153 for compact body fittings, and meet the following requirements:

1) Buried fittings shall be mechanical joint compliant with AWWA C111 and supplied with the proper adapter and/or transition gasket for use with PVC pipe.

2) Flanged fittings shall be 125 pound fittings meeting ANSI/ASME B 16.42, or meeting ANSI/ASME B 16.1 for fittings not available in ductile iron.

3) Fittings for use on buried PVC pressure pipe shall be ductile iron and supported with solid concrete block or concrete bearing pad in accordance with Standard Detail VB-1.

4) All ductile iron fittings used for sewer applications must have interior lining.

5) Foster Adaptors® by Infact Corporation may be used on mechanical joint connections where space is limited. Foster adaptors® shall be installed per manufacturer's recommendations.

4. Restrained Joint Fittings: Where applicable, restrained joint fittings may be used in lieu of or along with concrete restraints as specified on the plans and approved by the AUTHORITY, and shall meet the following requirements:

1) If mechanical restraining glands are used as restraining mechanisms on joints or at fittings, dimensions of the glands shall be such that they can be used with the standardized mechanical joint bell and tee head bolts conforming to the requirements of AWWA C 111 and AWWA C 153. Proper actuation of gripping wedges shall be obtained with torque limiting twists of nuts. All casting bodies, wedge assemblies, and related parts shall be finished with a heat cured corrosion resistant coating.

2) Mechanical restraining devices shall be installed in accordance with manufacturer's requirements.

5. Copper Pipe Fittings: Fittings shall meet requirements of ANSI/ASME B 16.22 for wrought copper, sweat joint.

6. Pressure Tubing Fittings: Pressure tubing fittings shall be rated at pressure equal to or greater than pressure rating of tubing and shall meet the following requirements:

1) Water service couplings and fittings for copper or polyethylene pressure tubing shall be copper tube size (CTS) and shall conform to AWWA C800, NSF 61, and NSF 372.

2) Low Pressure Force Main service couplings and fittings for polyethylene pressure tubing shall be iron pipe size (IPS) for use with O.D. controlled pipe or tubing. They may be polypropylene (PP) compression type.

3) Stainless steel fittings shall conform to AWWA C226.

7. Pressure Couplings: Connections shall be done with regular mechanical joint sleeves or coupling systems.

8. Gravity Sewer Couplings: Where necessary and approved by the AUTHORITY, the joining of differing gravity pipe materials and sanitary sewer pipe connections shall be made by means of an approved watertight, gasketed fitting similar to HARCO fittings or approved equal.

9. Pipe-to-Concrete Structure Connections:

   1) The pipe shall be connected to the concrete structure base section with an approved flexible boot type water-tight sleeve or gasket. The A-LOK Compression Connector as manufactured by A-LOK Products Inc. will not be an acceptable product for this purpose.

   2) If concrete is poured in place or in field modifications to the concrete structure are needed an approved flexible water-tight sleeve or gasket will be used. The A-LOK Compression Connector Field Sleeve as manufactured by A-LOK Products Inc. will not be an acceptable product for this purpose.

10. Casing Spacers: Casing spacers shall be single piece collar. Two-piece collar can be used for carrier pipes 18" or larger. Casing spacers shall be installed and spaced per manufacturer's recommendations and Standard Detail CS-1.

2.4 THRUST RESTRAINT

1. Concrete thrust blocks/restraints may be used with permission from the AUTHORITY. Refer to Standard Details CA-7 and CA-B. Concrete shall be in accordance with Section 03 30 00 – Cast-In-Place Concrete or 03 41 00 – Precast Structural Concrete.

2.5 TUNNEL LINER PLATE

1. General: Tunnel Liner Plate shall be two flange cold-formed steel liner plate in accordance with Section 16, "Steel Tunnel Liner Plates" of the AASHTO Standard Specifications for Highway Bridges. Minimum thickness shall be 0.075 inches.

2. Fabrication: Liner plates shall be fabricated from commercial quality, hot-rolled carbon steel sheets or plates conforming to ASTM A568/A568M. Plates shall be accurately curved to suit the tunnel cross section and shall be of uniform fabrication to allow plates of similar curvature to be interchanged.

3. Construction: All plates shall be punched for bolting on both longitudinal and circumferential seams and shall be so fabricated as to permit complete erection from the inside of the tunnel. The longitudinal seam shall be of the lap type, with an offset equal to gauge of metal for the full width of plate to allow the cross section of the plate to be continuous through the seam. Circumferential hole spacing will be a multiple of plate length to allow staggering of the longitudinal seam.

4. Grout System:

   1) Grout holes shall be 2 inches in diameter and shall be provided to permit grouting as the assembly of the liner plate proceeds. All grout holes shall be plain, tapped, or welded with coupling. Tapped holes shall be provided with a pipe plug screwed in place.

   2) Grout shall be "fine grout" in accordance with ASTM C476.

5. Coating: Liner plates shall be zinc coated in accordance with ASTM A123 except that the zinc shall be applied at the rate of 2 ounces per square foot total for both sides.

6. Hardware:

   1) Bolt and nuts shall be 5/8 inch in diameter and length as recommended by the manufacturer. Bolts and nuts shall conform to ASTM A307 or A449. For longitudinal seams, bolts conform to ASTM A449 Type 1 for plate thickness equal to or greater than 0.209, and ASTM A307 Grade A (Grade B may be substituted) for plate thickness less than 0.209. All circumferential bolts shall conform to ASTM A307 Grade A (Grade B may be substituted). Nuts shall conform to ASTM A563, Grade A (Grade C may be substituted).

   2) Galvanizing for nuts and bolts shall conform to ASTM A153, Class C. Threads are to provide a free running fit after galvanizing.

2.6 MISCELLANEOUS

1. Lubricant: Lubricant for joints shall be that supplied by the manufacturer of the pipe being used. If PVC pipe is used, the lubricant for PVC pipe shall be used at joints with valves, fittings, hydrants, or other pipe materials. With PVC pipe, no lubricant harmful to polyvinyl chloride plastic shall be used. NSF 61 certified lubricant must be used on all joints when installing potable water utilities.

PART 3 EXECUTION

3.1 EXCAVATION, BACKFILLING AND COMPACTION

1. General: Trench excavation shall be in accordance with Section 31 23 33 – Trenching and Backfilling.

2. Trench Width and Depth of Cover: Minimum cover for water, sewer, or stormwater lines shall be in accordance with Section 31 23 33 – Trenching and Backfilling, Standard Details TB-1, TB-2, and TB-3 unless otherwise noted on Drawings.

3.2 SEPARATION AND LOCATION OF WATER AND SEWER LINES

1. Parallel Installation:

   1) Normal conditions – Water mains shall be separated at least 10 feet horizontally from a sewer or sewer manhole. The distance shall be measured edge-to-edge.

   2) Unusual conditions – When local conditions prevent a horizontal separation of 10 feet, the CONTRACTOR shall notify the AUTHORITY. The AUTHORITY, after consultation with the Virginia Department of Health, shall provide special instructions for construction within the area of conflict. In some cases, if authorized by the AUTHORITY, the 10 foot separation requirement may be waived provided that:

      a) The bottom (invert) of the water main shall be above the top (crown) of the sewer in accordance with Standard Detail TB-4.

      b) Where this vertical separation cannot be obtained, the sewer shall be constructed of AWWA C900 pressure pipe, pressure tested in place to 30 psi without leakage prior to backfilling.

      c) The sewer manhole shall be in compliance with Section 33 30 00 – Sanitary Sewerage Utilities.

2. Water/Sewer Crossings:

   1) Normal conditions – Water lines crossing over house sewers, storm sewer, or sanitary sewers shall have a minimum separation of 18 inches between the bottom of the water line and the top of the sewer and be constructed in accordance with Standard Detail HC-1. Water lines crossing sewers shall be ductile iron pipe or AWWA-approved pressure pipe.

   2) Unusual conditions – When local circumstances prevent normal conditions described above, the CONTRACTOR shall notify the AUTHORITY. The AUTHORITY, after consultation with the Virginia Department of Health, shall provide special instructions for construction within the area of conflict. In some cases, if authorized by the AUTHORITY, the following construction shall be used:

      a) Sewers passing over or under water mains shall be constructed or reconstructed of AWWA-approved pressure pipe, pressure tested in place to 30 psi without leakage prior to backfilling, and in addition, sewer joints shall be placed equidistant and as far as possible from the water main joints.

      b) Water line shall be ductile iron pipe encased in concrete per Standard Detail CE-1.

      c) Water lines being installed and passing under sewers shall be protected by providing:

         - A vertical separation of at least 18 inches between the bottom of the sewer and the top of the water line.

         - Adequate structural support for the sewers to prevent excessive deflection of the joints and the settling on and breaking of the waterline.

         - That the length of the water line be centered at the point of the crossing so that joints shall be equidistant and as far as possible from the sewer.

3. Storm Sewer/Sanitary Sewer Crossings:

   1) Normal Conditions – Sanitary sewers passing over or under storm sewers shall have a minimum vertical separation of 18 inches between outer edges of pipe. Sewer shall be ductile iron pipe or other AWWA-approved pressure pipe.

   2) Unusual Conditions – When local circumstances prevent normal conditions described above, the CONTRACTOR shall notify the AUTHORITY. The AUTHORITY or their representative shall provide special instructions for construction within the area of conflict. In some cases, if authorized by the AUTHORITY, the 18 inch separation requirement may be waived provided that:

      a) The sanitary sewer is constructed with ductile iron pipe and encased in concrete per Standard Detail CE-2.

4. Intersections: No water pipe shall pass through or come in contact with any part of a sewer or sewer manhole.

5. Separation of Sewers: Storm runoff shall not pass into sanitary sewer lines. Storm sewers shall not be connected to sanitary sewers. Where roof drains are tied into the sanitary sewer system, they shall be disconnected in accordance with Standard Detail HC-2.

6. Drainfields:

   1) Normal Conditions – Water mains, appurtenances, and utility easements shall be separated at least 10 feet horizontally from a sanitary drainfield. The distance shall be measured edge-to-edge.

   2) Unusual Conditions – When local conditions prevent a horizontal separation of 10 feet, the CONTRACTOR shall notify the AUTHORITY. The AUTHORITY shall provide special instructions for construction within the area of conflict. In some cases, if authorized by the AUTHORITY, the 10 foot separation requirement may be waived provided that:

      a) The water line is constructed of ductile iron pipe and concrete encased the entire length of the water line where 10 feet separation is not attainable, with no water service connections or other appurtenances present or proposed.

3.3 INSTALLATION OF PIPE AND FITTINGS

1. General: No valve, hydrant, or other appurtenance on existing water lines shall be opened or closed for any purpose by the CONTRACTOR. Any opening or closing of valves, hydrants, whatsoever shall be by the AUTHORITY personnel only. All wet taps to the AUTHORITY waterlines must be witnessed by AUTHORITY personnel. The CONTRACTOR shall notify the AUTHORITY at least 48 hours prior to performing any taps and prior to the need to open or close any appurtenance, except in emergencies, at which time the AUTHORITY shall be notified immediately.

2. Installation and pipe and fittings shall be in compliance with AWWA C605 for PVC pipe or AWWA C600 for ductile iron pipe.

3. Handling: Pipe shall be placed in the trench in such a manner as to prevent damage to pipe and protective coatings and linings. Under no circumstances shall pipe be dropped or dumped into the trench. As the temperature approaches or drops below freezing, extra care shall be used in handling pipe.

4. Cleaning: Every precaution shall be taken to prevent foreign material from entering the pipe while it is being placed in the line. Spigot and bell ends of pipe and gaskets shall be cleaned and lubricated according to manufacturer's instructions. At times when pipe installation is not in progress, the open ends of the pipe shall be closed by a watertight plug.

5. Cutting: Pipe shall be cut in a neat and workmanlike manner without damage to the pipe. Unless otherwise authorized by the AUTHORITY, cutting shall be done by means of approved type of mechanical cutters. Wheel cutters shall be used when practicable. All ductile iron pipe used for sewer applications that require cutting must have Protecto 401 Ceramic Epoxy field applied to the cut pipe.

6. Direction of Laying: All pipes shall be laid with bell ends facing in the direction of laying unless otherwise directed by the AUTHORITY. Where pipe is laid on a grade of 10 percent or greater, or for gravity pipe systems, the laying shall start at bottom and shall proceed upward with the bell ends of pipe upgrade. Each piece of pipe shall be laid true to line and grade using a laser level to maintain control over grade. The bottom of the trench shall be smoothly graded and bell holes provided so that the trench bottom provides uniform support to the barrel of the pipe when in final position. Adjustments to line or grade shall be made by removing or adding granular material under the barrel. In no case shall wedges or blocks be used under the body of the pipe. The pipe shall be pushed fully "home" by hand, with a bar and block of wood to cushion the bell, or other methods for large diameter pipe.

7. Bedding: Gravity sewer bedding shall consist of VDOT #68 aggregate and shall conform to Standard Detail TB-1. For parallel installation with force main, refer to Standard Detail TB-4. In areas of high water table, #57 stone may be used upon the approval of the AUTHORITY. Water main bedding shall conform to Standard Detail TB-3. Storm sewer bedding shall conform to Standard Detail TB-2.

8. Lateral Connections: Tees and laterals shall be installed with the same care that mainline sewers are laid and in accordance with Standard Details CO-1, CO-2, or CO-3 as appropriate. Slopes shall not be less than 1% unless otherwise indicated. Laterals shall be 4 inches minimum for a single house connection or 6 inches minimum for commercial or double house connections. Pipe shall be of the same material as the main sewer pipe and shall run to property lines unless otherwise indicated on the plans. Connections to existing lateral pipes shall be made with the use of a watertight pipe coupling. Non-connected pipe laterals shall be properly capped and suitably sealed to prevent infiltration of water into the laterals. Caps or plugs shall be braced to prevent blow off during exfiltration or air testing, and shall be surrounded by a concrete collar or pad as shown in the Standard Details. Cleanout caps shall have steel rods installed to each side in the concrete pad as shown in the Standard Details. Couplings shall be provided as needed for ductile iron pipe connections to plastic tees. All laterals shall be installed in accordance to the Uniform Statewide Building Code. All laterals greater than 6 inches shall be connected directly into the manhole. When lines are required to be tapped, connections shall be made using an approved watertight saddle. Drop connections shall be used when the depth of the sewer lateral is greater than 8 feet. Rotation of mainlines and concrete support will be required for deeper installations. Installation of cleanout caps in traffic bearing areas shall be in accordance with Standard Detail CO-T.

9. Deflection at Joints: There shall be zero deflection in gravity sewer lines/joints installation.

Maximum deflection for force main and pressure pipe joints will be as follows:

Allowable Deflection (in inches)

Pipe Size	Ductile Iron (Push on) Lengths				Ductile Iron (Mechanical) Lengths				PVC-AWWA (Push-on)
	12'	16'	18'	20'	12'	16'	18'	20'	
4"	12	17	19	21	21	28	31	34	12
6"	12	17	19	21	18	24	27	30	4
8"	12	17	19	21	13	18	20	22	3
10"	12	17	19	21	13	18	20	22	2.5
12"	12	17	19	21	13	18	20	22	2
16"	7.5	10	11	12	9	12	13.5	15	-

Flexible pipe may be curved in the trench to the limits specified in "Allowable Deflection (in inches table above)". Do not deflect PVC pipes in joints. Joints must be secured laterally in ditch and deflection effected in the barrel of the pipe unless specific allowance by manufacturer is provided in the joint.

10. Installation of Fittings: Fittings shall be installed with the same care that mainline pipe is installed. Caps or plugs shall be braced to prevent blow off during testing.

    1) Ductile iron fittings used on Force main and Other Pressure Pipe shall be supported in accordance with Part 2 of this Section.

11. Jointing:

    1) Push-on Joints (Water Mains, Force Mains, and Pressure Pipe): Joint assembly shall be made according to the manufacturer's directions and meet the requirements of AWWA C900. PVC pipe joints with ductile iron fittings shall be installed in accordance with manufacturer's directions and in compliance with these specifications. Integral bells shall be required.

    2) Push-on Joints (Gravity Sewer): Joint assembly shall be made according to the manufacturer's directions and shall comply with the guidelines for installation of PVC pipe as developed by the

Uni-Bell Plastic Pipe Association. PVC pipe joints with fittings of the same material as the sewer main shall be installed in accordance with manufacturer's directions in compliance with these specifications. Integral bells shall be required.

3) Mechanical Joints: When installing mechanical joint (MJ) ductile iron pipe, the socket, spigot end and rubber gasket shall be thoroughly washed with soapy water to remove any grease or grit that might damage the gasket. In making up the joint, the gland for MJ pipe followed by the gasket, shall be placed over the plain end of the pipe and inserted into the socket. The gasket shall be pushed into position without excessive force and evenly seated in the socket of the pipe bell, and the gland for MJ pipe, then moved into position against the face of the rubber gasket.

4) Flanged Joints: Where flanged joints are used, they shall be installed by skilled workmen in accordance with the best standard practice. Bolts shall be tightened so as to evenly distribute the joint stress and insure proper pipe alignment.

5) HDPE: HDPE pipe shall be continuously joined to effectively span the required distance from the inlet to the outlet of the respective pipe, unless otherwise specified.

12. Anchorage: Pressure pipe lines shall be protected against joint pulling or thrust damage by suitable concrete anchors, braces, tie rods or mechanical joint restraining devices installed at direction changes as a result of fittings and all other critical points. Rods and clamps shall be stainless steel or Corten steel. Concrete anchors shall be of the size indicated in Standard Details CA-1 or CA-2 and shall bear on solid undisturbed or properly compacted earth. For pipe installation at grades over 20 percent, the pipe shall be anchored in accordance with Standard Detail CA-3. Restrained joints, such as "Mega-Lug", may be used for ductile iron pipe upon approval from the AUTHORITY in accordance with 2.2.4 in this section. Where such joints are used, concrete anchorage shown on the drawings will not be required. Locked gasket joints for pipe installation through casing shall be used. Hydrants shall be anchored in accordance with Standard Detail FH-1. Stubouts, dead-end lines, and reducers shall be anchored in accordance with Standard Details CA-4, CA-6, or CA-7.

13. Added Service Connections: For concrete and clay sewers, saddle tees shall be used for the installation of new service connections.

3.4 ROADWAY CROSSINGS

1. Roadway Crossings: All roadway crossings shall have pipe encased in steel casing, or other material approved by VDOT, in accordance with Part 2 of this section. Carrier pipe shall be ductile iron; gravity or non-pressure carrier pipe may be of other materials acceptable to both the Authority and VDOT.

2. Roadway Crossings through Casings: When using casings, care shall be taken to maintain the proposed plan grade. Before pushing the pipe through the casing, casing spacers shall be installed on the pipe to keep the pipe centered in the casing and to prevent damage when installation is made. Casing spacers shall be in accordance with Part 2 of this section. Care shall be taken to ensure that the installed pipeline is well secured to prevent movement. See Standard Details CS-1. All joints within casing pipe shall be restrained.

3.5 STREAM AND WATER CROSSINGS

1. General: Pipelines crossing stream beds or body of water shall be installed with isolation gate valves within twenty-five (25) feet on each side of the crossing. Pipe material shall be consistent between valves.

2. Below Grade Water Crossings: Pipes to be installed underneath a bed of stream or body of water shall be in accordance with one of the following methods:

1) Open Cut Pipeline Installation: Ductile iron pipe shall be used where pipeline is installed through open trenching under a stream bed or body of water in accordance with Section 31 23 33 – Trenching and Backfilling in these Specifications. Pipe shall be encased in concrete the entire width of the stream bank in accordance with Standard Detail CE-1 and Section 31 23 33 – Trenching and Backfilling in these Specifications.

2) Directional Drill Installation: HDPE pipe shall be used where pipeline is directionally drilled under a stream bed or body of water. Unless otherwise stated on the plans, pipe shall be encased in HDPE carrier pipe.

3. Above Grade Water Crossings: Pipeline crossings installed above grade shall be approved by the Authority on a case-by-case basis and meet the following minimum criteria:

1) Concrete pier supports shall be designed and constructed to provide adequate support for the pipeline crossing.

2) Where exposed, pipeline shall be encased in steel encasement pipe in accordance with this Section of the Specifications and provided adequate insulation to prevent freezing.

3) Pipeline shall be installed above the 100-year flood level.

4. Sample Tap Assemblies: Where required by the Authority, sample tap assemblies shall be installed at each end of the stream or water crossing in accordance with Section 33 04 00 – Valves and Cocks. Assemblies shall be installed at locations and elevations such that they are not subject to flooding.

3.6 PIPELINE TESTING

1. General: Testing of pipe lines and structures shall be at the CONTRACTOR's expense. Any defects or leaks shall be repaired or replaced at the CONTRACTOR's expense. Water for the first test shall be provided by the AUTHORITY. Subsequent water for tests shall be at the CONTRACTOR's expense.

2. Pressure Testing:

1) Test Section: Pressure and leakage testing shall be conducted on each valved section (between adjacent valves) of pressure pipeline. Force mains and other pressure pipe shall be tested in sections not to exceed 1,000 feet.

2) Procedures: Pressurization, air removal, and allowances shall be in accordance with AWWA C600, Section 5 for ductile iron pipe or AWWA C605, Section 7 for PVC pipe. Testing shall begin on the first valved section of line within ten days after its completion. The pressure and leakage tests shall be conducted concurrently for duration of two hours. The valved section of the pipe under consideration shall be slowly filled with water and brought to the specified pressure by means of a pump. Before supplying the specified test pressure, all air shall be expelled from the pipe. Testing shall not begin until at least seven days after the last concrete anchor has been poured on the section of line being tested (if high early concrete is used, two days). The AUTHORITY's Project Representative shall observe all leakage tests. If the pipe fails to meet test requirements, all leaks shall be repaired and defective pipe replaced at the CONTRACTOR's expense. The test shall be repeated until satisfactory results are obtained. The CONTRACTOR shall be charged for all retests at the normal rates for inspection services.

3) Test Pressures: Test pressure shall be the greater of 200 psi or 1.5 times the stated working pressure as measured at the lowest point in that test section, unless otherwise noted.

4) Pressure Test Gauges: Pressure test gauges shall be lead free bronze (compliant with NSF 372) Bourdon tube-type in cast aluminum case, with male IPT connection at bottom, at least 4.5 inch face diameter, with 0-300 psi range and 1 psi increments. Test gauge shall be similar to Type 1082 Test Gauge as manufactured by Ashcroft, Inc.

5) Leakage: Leakage shall be defined as the quantity of water that must be supplied into the valved pipe section to maintain pressure within 5 psi of the specified test pressure. The allowable leakage shall not exceed the values given in table labeled Allowable Leakage per 1,000 Feet of Pipeline.

Allowable Leakage Per 1,000 Feet (305 m) of Pipeline - gph (multiply by 2 for 2 hour test)

Avg. Test Pressure	Pipe Diameter										
psi	3	4	6	8	10	12	14	16	18	20	24
300	0.35	0.47	0.70	0.94	1.17	1.40	1.64	1.87	2.11	2.34	2.81
275	0.34	0.45	0.67	0.90	1.12	1.34	1.57	1.79	2.02	2.24	2.69
250	0.32	0.43	0.64	0.85	1.07	1.28	1.50	1.71	1.92	2.14	2.56
225	0.30	0.41	0.61	0.81	1.01	1.22	1.42	1.62	1.82	2.03	2.43
200	0.29	0.38	0.57	0.76	0.96	1.15	1.34	1.53	1.72	1.91	2.29
175	0.27	0.36	0.54	0.72	0.89	1.07	1.25	1.43	1.61	1.79	2.15
150	0.25	0.33	0.50	0.66	0.83	0.99	1.16	1.32	1.49	1.66	1.99
125	0.23	0.30	0.45	0.60	0.76	0.91	1.06	1.21	1.36	1.51	1.81
100	0.20	0.27	0.41	0.54	0.68	0.81	0.95	1.08	1.22	1.35	1.62

3. Gravity Sewer Testing: All gravity sewer lines shall be tested by any or all of the following methods for either displacement or structural faults and for watertightness by the CONTRACTOR. The testing methods shall be at the option of the AUTHORITY. The CONTRACTOR shall make all preparations and shall supply the labor for all tests. The CONTRACTOR shall supply specialized equipment, such as T.V. cameras for the conduction of such tests. No charge shall be made for initial witnessing of tests, but each succeeding test required on the same section of line caused by failure of the tests shall be charged to the CONTRACTOR.

1) Pipe Displacement Testing - Lights: A light will be flashed between manholes by means of a flashlight or by reflecting sunlight with a mirror. If the illuminated interior of the pipeline shows visible leaks, poor alignment, displaced pipe or any other defects, they will be remedied by the CONTRACTOR at the CONTRACTOR's expense.

2) Pipe Deflection Testing: Pipe will be measured for vertical ring deflection after completion of the backfill. Maximum ring deflection of the pipe under load shall be limited to 5.0 percent of the vertical internal pipe diameter. Testing shall be accomplished by recording deflectometer or by approved mandrel, sphere, or pin type go/no-go device. Such equipment shall be furnished by the CONTRACTOR.

3) Pipe Displacement and Structural Testing – T.V.: Pending results of the Pipe Displacement Light Testing and Pipe Deflection Testing, a T.V. camera to be supplied by the CONTRACTOR may be required to locate defects in the pipeline. These shall then be remedied by the CONTRACTOR at the CONTRACTOR's expense. A T.V. inspection shall be performed by the Contractor thirty (30) days prior to the end of the warranty period for all gravity sewer projects. A copy of the recorded T.V. inspection will be submitted to the Authority.

4) Pipe Infiltration Testing: When, in the opinion of the AUTHORITY, the trench or excavation is sufficiently (4 foot above crown) saturated as a result of ground water or rain, tests may be made on the basis of infiltration. The CONTRACTOR shall carefully measure the flow of water at the

nearest downgrade manhole. The necessary supply of water, plugs, labor and equipment shall be furnished by the CONTRACTOR at his expense. Three series of measurements shall be made at not less than 1 hour intervals, and the results shall be reduced to an average. This average shall then be computed so as to apply for the 24-hour period. All such tests shall be made only under the supervision of the AUTHORITY. All defective work shall be immediately repaired and retested until proven to be satisfactory. Infiltration shall not exceed a rate of 100 gallons per inch of pipe diameter per mile per day for any section of the system. For pipe larger than 24 inches, the maximum rate shall be limited to 2400 gallons per mile per day.

5) Pipe Exfiltration Testing: When conditions are not suitable for making infiltration tests, an exfiltration test may be made. The line to be tested shall be filled so that a head of at least 4 feet is provided above both the water table and the top of the pipe at the upper end of the pipeline to be tested. The filled line shall be allowed to stand until the pipe has reached its maximum absorption, but not less than 4 hours. After absorption, the head shall be re-established. The amount of water required to maintain this water level during a 2 hour test period shall be measured. Leakage measured by this test shall not exceed 100 gallons per inch diameter per mile of pipeline per day. When leakage exceeds the maximum amount specified, satisfactory correction shall be made and retesting accomplished. For pipe larger than 24 inches, the maximum rate shall be limited to 2400 gallons per mile per day.

6) Pipe Air Testing: Air Testing shall be conducted in accordance with ASTM F1417 and as summarized below.

a) Clean pipe to be tested by propelling snug-fitting inflated rubber ball through the pipe with water if necessary.

b) Plug all pipe outlets with suitable test plugs. Brace each plug securely.

c) If the pipe to be tested is submerged in ground water, insert a pipe probe by boring or jetting into the backfill material adjacent to the center of the pipe, and determine the pressure in the probe when air passes slowly through it. This is the back pressure due to ground water submergence over the end of the probe. All gauge pressures in the test should be increased by this amount.

d) Add air slowly to the portion of the pipe installation under test until the internal air pressure is raised to 4.0 psig.

e) After an internal pressure of 4.0 psig is obtained, allow at least two minutes for air temperature to stabilize, adding only the amount of air required to maintain pressure.

f) Pressure Test Gauges: Pressure test gauges shall be lead free bronze Bourdon tube-type in cast aluminum case, with male IPT connection at bottom, at least 2 inch diameter face, with minimum 0-15 psi range and maximum 0.25 psi increments.

g) After stabilizing the internal pressure at 4.0 psig, reduce the internal air pressure to 3.5 psig, and start stopwatch. Determine the time in minutes and seconds that is required for the internal air pressure to reach 2.5 psig. Minimum permissible pressure holding times for runs of single pipe diameter and for systems of 4 inch, 6 inch, or 8 inch laterals in combination with trunk lines are indicated in minutes and seconds in the table shown.

NOTE: The air test may be dangerous if, because of ignorance or carelessness, a line is improperly prepared. It is extremely important that the various plugs be installed and braced in such a way as to prevent blowouts. In as much as a force of 250 pounds is exerted on an 8 inch plug by an internal pipe pressure of 5 psi, it should be realized that sudden expulsion of

a poorly installed plug or of a plug that is partially deflated before the pipe pressure is released can be dangerous. As a safety precaution, pressurizing equipment should include a regulator set at perhaps 10 psi to avoid over pressurizing and damaging an otherwise acceptable line. No one shall be allowed in the manholes during testing. The pressure gauge used during the test shall be located completely outside of manhole.

Pipe Dia. (in.)	Min. Time (min:sec)	Length for Min. Time (ft.)	Time for Longer Length (sec)	Specification Time for Length (L) Shown (min:sec)							
				100'	150'	200'	250'	300'	350'	400'	450'
4	3:46	597	.380 L	3:46	3:46	3:46	3:46	3:46	3:46	3:46	3:46
6	5:40	398	.854 L	5:40	5:40	5:40	5:40	5:40	5:40	5:42	6:24
8	7:34	298	1.520 L	7:34	7:34	7:34	7:34	7:36	8:52	10:08	11:24
10	9:26	239	2.374 L	9:26	9:26	9:26	9:53	11:52	13:51	15:49	17:48
12	11:20	199	3.418 L	11:20	11:20	11:24	14:15	17:05	19:56	22:47	25:38
15	14:10	159	5.342 L	14:10	14:10	17:48	22:15	26:42	31:09	35:36	40:04
18	17:00	133	7.692 L	17:00	19:13	25:38	32:03	38:27	44:52	51:16	57:41
21	19:50	114	10.470 L	19:50	26:10	34:54	43:37	52:21	61:00	69:48	78:31
24	22:40	99	13.674 L	22:47	34:11	45:34	56:58	68:22	79:46	91:10	102:33
27	25:30	88	17.306 L	28:51	43:16	57:41	72:07	86:32	100:57	115:22	129:48
30	28:20	80	21.366 L	35:37	53:25	71:13	89:02	106:50	124:38	142:26	160:15
33	31:10	72	25.852 L	43:05	64:38	86:10	107:43	129:16	150:43	172:21	193:53
36	34:00	66	30.768 L	51:17	76:55	102:34	128:12	153:50	179:29	205:07	230:46

3.7 DISINFECTION

1. General: Disinfection of water mains shall be in accordance with Section 33 10 00 - Water Utilities.

3.8 EXPOSED PIPING

1. Installation of Pipe Supports: Exposed piping inside of building shall be supported both horizontally and vertically such that forces are transmitted to the supports and sagging is eliminated.

2. Identification: To identify exposed piping, the different lines shall have contrasting colors. Pipes shall be color coded in a manner that will permit ready identification of pipes at any location. Labeling of the identification of the pipe with or without an accompanying color code shall be considered as an acceptable substitute for the color scheme contained herein. Where color bands are utilized, the bands are to be one-inch wide and placed on 18 inch centers.

   Sludge Line - Dark Brown
   Gas Line - Red
   Potable Water Line - Dark Blue
   Chlorine Line - Yellow
   Sewage Line - Dark Gray
   Compressed Air Line - Dark Green
   Water Line for Heating Digestors or Building - Dark Blue with Red Band
   Oxygen - White with Red Band
   Non Potable Water Line - Light Gray with Yellow Band

3.9 TUNNEL LINER PLATE

1. Tunnel Liner Plate shall be installed in accordance with manufacturers' instructions.

END OF SECTION

SECTION 33 04 00 - VALVES AND COCKS

PART 1 GENERAL

1.1 DESCRIPTION

1. Work Included: Provide complete, in place, and free from leakage, all valves as shown on the plans and in accordance with this Specification. Valves shall be furnished complete with valve operators and accessories necessary for a complete assembly adequate for the specified or indicated purpose. Valve assemblies shall be installed, painted, tested and adjusted.

2. Related Sections: Additional Sections of the Documents which are referenced in this Section include:

   1) Section 01 33 00 - Submittal Procedures

   2) Section 01 66 00 – Product Delivery, Storage, and Handling Requirements

   3) Section 33 03 00 - Utility Pipe and Materials

1.2 REFERENCES

1. General: The work shall comply with the most recent standards or tentative standards as published at the date of the contract and as listed in this specification using the abbreviation shown.

2. American National Standard Institute (ANSI)/American Society of Mechanical Engineers (ASME):

   1) B16.1 Gray Iron Pipe Flanges and Flanged Fittings, Class 25, 125, 250, and 800

   2) B16.5 Pipe Flanges and Flanged Fittings: NPS ½ through 24

3. American Society of Sanitary Engineers (ASSE):

   1) 1011 Performance Requirements for Hose Connection Vacuum Breakers

4. American Water Work Association (AWWA):

   1) C223 Fabricated Steel and Stainless Steel Tapping Sleeves

   2) C500 Metal Seated Gate Valves for Water Supply Service

   3) C504 Rubber-Seated Butterfly Valves

   4) C508 Swing-Check Valves for Waterworks Service, 2 in (50mm) Through 24 in (600 mm) NPS

   5) C509 Resilient-Seated Gate Valves for Water Supply Service

   6) C515 Reduced-Wall, Resilient-Seated Gate Valves for Water Supply Service

   7) C517 Resilient-Seated Cast Iron Eccentric Plug Valves

   8) C530 Pilot-Operated Control Valves

   9) C550 Protective Interior Coatings for Valves and Hydrants

10) C700 Cold-Water Meters-Displacement Type, Bronze Main Case

11) C703 Cold-Water Meters-Fire Service Type

12) C800 Underground Service Line Valves and Fittings

13) C900 Polyvinyl Chloride (PVC) Pressure Pipe and Fabricated Fittings (4 in. - 60 inc. (100 mm - 1,500mm)

14) C907 Injection-molded Polyvinyl Chloride (PVC) Pressure Fittings, 4-inch through 12-inch (100 mm through 300mm) for Water, Wastewater, and Reclaim Water Services

5. American Society for Testing and Material (ASTM):

1) A48 Standard Specification for Gray Iron Castings

2) A126 Standard Specification for Gray Iron Castings for Valves, Flanges, and Pipe Fittings

3) D429 Standard Test Methods for Rubber Property-Adhesion to Rigid Substrates

6. National Science Foundation (NSF):

1) 14 Plastic Piping System Components and Related Materials

2) 61 Drinking Water System Components - Health Effects

3) 372 Drinking Water System Components - Lead Content

1.4 SUBMITTALS

1. General: Shall be in accordance with Section 01 33 00 – Submittal Procedures. Each submittal shall be identified with precise, use, line and location.

2. Shop Drawings: As a minimum, shop plans shall include manufacturer's names, class of materials, catalog, and engineering data showing compliance with the specified requirements.

3. Maintenance Instructions: Submit corrective and preventive maintenance instructions, including recommended spare parts.

1.5 DELIVERY, STORAGE AND HANDLING

1. General: Shall be in accordance with Section 01 66 00 – Product Delivery, Storage, and Handling Requirements

2. Delivery: Deliver valves to the job site packaged, tagged, and marked.

3. Storage: Store valves at the job site in a manner to prevent damage and accumulation of dirt and rust.

4. Valve relocation: CONTRACTOR shall use new valves for any valve to be relocated. The old valve shall be delivered to the AUTHORITY or abandoned in place as directed by the AUTHORITY.

1.3 QUALITY ASSURANCE

1. Quality Assurance: All utility appurtenances shall be new, free from defects or contamination and shall, whenever possible, be the standard product of a single manufacturer.

2. Manufacturers Limitations: Products used in the work of this section shall be manufactured in the U.S. where possible by manufacturers regularly engaged in production of similar items.

3. Approved Products List: The CONTRACTOR shall consult the AUTHORITY'S Approved Products List for acceptable materials and equipment.

PART 2 PRODUCTS

2.1 General

1. Valves shall be non-rising stem, with handwheel, lever, nut, or hydraulic operator, as shown on the Plans and specified herein.

2. All valves and cocks and other appurtenances specified herein for potable water applications shall be compliant with NSF 61 - Part G or NSF 372 or if bronze is used, bronze materials shall be "lead free" bronze alloys. All valves and cocks shall meet NSF 61 and NSF 14 (PVC only).

2.2 GATE VALVES

1. Gate Valves: Valves shall be cast or ductile iron, resilient wedge conforming to ANSI/AWWA C509 or C515. The body, bonnet, and o-ring plate shall be fusion bond epoxy coated, both interior and exterior on body and bonnet. Epoxy coating shall be NSF 61 certified and applied in accordance with AWWA C550. Wedge disc shall have two seating surfaces and provide smooth unobstructed waterway with 100 percent smooth passage. The sealing rubber shall be permanently bonded to the wedge to meet ASTM tests for rubber metal bond ASTM D429. Working pressure shall be at least 200 psi for valves 12 inches in diameter and smaller. Valves shall have O-ring seals at all pressure retaining joints and open left (counterclockwise) with a 2 inch square wrench nut. Handwheel operators shall be provided for all interior installation. Valve ends shall be of mechanical joint type unless otherwise shown on the plans. Each valve shall have a maker's name, pressure rating, and year in which it was manufactured cast in the body. Prior to shipment from the factory, each valve shall be tested by hydrostatic pressure per AWWA C509 or C515. Valves 2 inches and smaller shall have threaded ends and may be ANSI/AWWA C500 double disc gate valves if resilient seat units are not available.

2.3 CHECK VALVES

1. Check Valves: Liquid check valves shall be of the swing check type, bronze mounted with cast iron body conforming to AWWA C508. Valve shall be operated by an external lever and adjustable weight. Bronze disc shall be required for valves up to 12-inch and shall provide a positive seal in the closed position and pivot to provide an unobstructed flow way in the open position.

2. Spring Check Valves (Low Pressure Force Main Service): Spring check valves shall be constructed of high impact PVC and rated to 150 psi or greater. For low pressure force main services, spring check valve shall be threaded directly to the corporation stop and join with the service line.

2.4 BUTTERFLY VALVES

1. Butterfly Valves (Water): Butterfly valves shall be rubber seated, short body in accordance with AWWA C504, Class 250 B for installation between 125 pound standard flanges with ASTM A126 Class B cast iron bodies, bronze discs, 416 stainless steel stems, #12 Buna-N or Ethylene-Propylene seat and steam O-rings, and with hand-wheel actuator with position indicator.

2. Underground Butterfly Valves (Water): Where approved by the Authority, butterfly valves used in underground installations shall be rubber seated, tight-closing type in accordance with AWWA C504, Class 250 B, ductile iron body, ductile iron or 316 stainless steel discs, 316 stainless steel shafts, acrylonitrile butadiene (NBR) or ethylene propylene diene terpolymer (EPDM) seats, and nut actuator.

2.5 PLUG VALVES

1. Plug Valves: Valves shall be cast iron provided with standard mechanical joint or flange ends as shown on the plans and shall be in accordance with AWWA C517 and rated at 175 psi working pressure. Valve shall be capable of bubble tight closure but adjustable to stop positions partially closed for throttling. Underground valves shall be fitted with a standard 2 inch operating nut. Exposed valves shall be provided with a handwheel or lever handle for operation. Valve liners and seats shall be of a material suitable for use with an abrasive sanitary sludge.

2.6 PVC BALL VALVES

1. General: PVC ball valves shall be provided where noted on the drawings. Valves shall be manufactured of PVC Type 1 Grade 1 with EPDM O-ring seals, true union connections, and threaded end connectors. Valves shall compliant with NSF 61 and AWWA C907 or AWWA C900 and have a minimum pressure setting of 200 psi or as shown on design drawings.

2.7 CONTROL VALVES

1. General: Control Valves shall be as specified below. Where references are given to specific model numbers or codes, these refer to Cla-Val Co. Newport Beach, CA and are intended to provide a basis for the minimum requirements. Any submitted products shall be equal to or better than the specified and referenced products.

2. Pressure Relief Valves: Valves will be designed to act as pressure relief valve by opening on a high inlet pressure very quickly to protect the downstream zone. Valve will have a normally closed pressure relief pilot designed to open on an increase in upstream pressure and close on a decrease.

    1) The main valve shall be ductile iron with stainless trim internals and a one piece stainless steel seat. Interior and exterior surfaces shall be coated with an NSF 61-certified fusion bonded epoxy coating (KC). The cover will have a locating lip. The main body can be supplied with 300 ANSI threaded end connections or will have 150 ANSI flanged ends rated to 400 psi and 250 psi working pressures. The CRL relief pilot will have a 20-200 psi spring range. There shall be pilot isolation valves installed (B). There shall be a gauge mounted on the main valve inlet (P). The pilot system will have a “Y” strainer (Y). There shall be an X101 visual valve position indicator (V) to monitor valve position at any time. The pilot system will consist of stainless steel tubing and fittings (KX). The pressure will be adjustable.

    2) The manufacturer shall be able to provide a computerized cavitation analysis to show that the valve will operate cavitation damage free throughout the entire flow range.

    3) The manufacturer shall provide a direct factory employee for startup and training.

3. Main Line Pressure Reducing Valve: Valve will be designed as a pressure reducing valve with surge shutoff feature. It will be designed to maintain a constant downstream pressure regardless of inlet pressure or flow fluctuations. It will open when the downstream zone pressure drops to feed water from the high side. This flow through the pressure reducing valve will be dictated by the downstream demand. If the downstream pressure exceeds the reducing set point the valve will close. A pressure relief valve shall typically be installed on the discharge side of the pressure reducing valve.

1) The main valve will be supplied with 100-01 full ported body configuration. It will consist of three different parts; the body with seat installed with flat seat stainless machine screws, the cover with cover bearing and the disc and diaphragm assembly. The diaphragm assembly will be the only moving part. It will be ductile iron and have stainless steel anti-cavitation trim internals (KO). The main valve trim will include a solid one-piece stainless seat, the contoured disc guide and the stainless stem. The main will have an NSF 61 fusion bonded epoxy coating on all internal and external ferrous metal surfaces (KC). The cover of the main valve will have a locating lip for ease of maintenance and to maintain alignment of the stem within the disc/diaphragm assembly. The main valve cover fasteners will be stainless steel. The cover will be one piece. There shall be no pins in the cover for alignment. The main valve will be of the pack-less design and shall have no o-rings or packing anywhere within the main valve. The main valve will have stainless steel cover bolts and nuts. The 2" and smaller valves can be supplied either 300 ANSI threaded or with 150 ANSI flanged ends. The 3" and larger are supplied flanged, 150 ANSI rated to 250 psi maximum working water pressure.

2) The pilot control system will consist of a CRD pressure reducing pilot. The CRD will be a 20-105 psi, but can also be supplied in 15-75 or 30-300 adjustment ranges. The surge override pilot will be a CRL with a 20-200 range. The pilot control system will also contain a flow clean strainer (A) to prevent any debris from entering the control loop. The system will also contain pilot isolation valves (B) for maintenance and troubleshooting. The main valve cover will have an X101 visual valve position indicator (V) for monitoring the valve position at any time. All pilot controls and tubing and fittings will be stainless steel (KX). The pilot system will also have an opening speed control for smooth operation. The pilot system will also have gauges mounted on the inlet and outlet for monitoring and adjustment (P).

3) The manufacturer shall provide a direct factory employee for start up and training for the operations and maintenance personnel.

4) The necessity for bypass piping for any PRV station will be individually determined by the Authority on a case-by-case basis.

4. Solenoid Pressure Reducing Valve: Valve will be designed as a pressure reducing and solenoid shutoff valve, and will maintain a constant downstream pressure regardless of inlet pressure or flow fluctuations. There shall be a solenoid shutoff feature that can be energized or de-energized to open the main valve. Valve shall be capable of being serviced without removal from the piping. A pressure relief valve shall typically be installed on the discharge side of the pressure reducing valve.

1) The main valve will be a 100-01 full ported main valve. The main valve will be ductile iron and have stainless steel anti-cavitation trim (KO). The main will have an NSF 61-certified fusion bonded epoxy coating (KC) on all internal and external ferrous metal surfaces. The cover of the main valve will have a locating lip for ease of maintenance and to maintain alignment of the stem within the disc/diaphragm assembly. There shall be no pins in the cover for alignment. The main valve will be of the pack-less design and shall have no o-rings or packing anywhere within the main valve. The main valve will have stainless steel cover bolts and nuts.

2) The pilot control system will consist of a CRD pressure reducing pilot. The CRD will be a 20-105 psi range. The pilot control system will also contain a "Y" strainer to prevent any debris from entering the control loop. The solenoid will be a 3 way solenoid that can be energized or de-energized to open the main valve. The pilot system will have an opening speed control (S). The system will also contain pilot isolation valves for maintenance and troubleshooting (B). The main valve cover will have an X101 visual valve position indicator for monitoring the valve position at any time (V). The pilot system tubing and fittings will be stainless steel and the CRD pilot and solenoid will be bronze. The pilot system will have gauges mounted up and downstream (P).

3) The manufacturer shall provide a direct factory employee for start up and training for the operations and maintenance personnel.

5. Pressure Regulator: Individual service valves shall be the diaphragm type with adjustable outlet pressure range of 25-75 psi. These valves for individual services, such as residences and businesses, shall be installed on the private (customer) side of the meter and shall be the responsibility of the owner. The AUTHORITY will not be responsible for installing or maintaining individual service pressure regulators.

2.8 TAPPING DEVICES

1. General: All wet taps on AUTHORITY waterlines shall only be made with approved tapping sleeve or tapping saddle.

2. Tapping Sleeve and Tapping Valve (water): Complete assembly, including tapping sleeve, tapping valve, and bolts and nuts. Use sleeve and valve compatible with tapping machine.

   1) Tapping sleeves are required for connecting to 2-inch and larger water mains with approved tapping valve as part of the tapping sleeve installation.

   2) Tapping Sleeve: Stainless steel meeting AWWA C223 with flanged outlet for new branch connection. Include sleeve matching size and type of pipe material being tapped and of outlet flange required for branch connection. Outlet neck shall be fitted with a ¾ inch tap and stainless steel or bronze test plug. Tapping sleeve shall be full circle stainless steel sleeves.

   3) Tapping Valve: Valve shall be of the resilient seated type with bodies and bonnets made of cast or ductile iron similar to those specified in 2.1.1. Outlet end of valve shall be mechanical joint and all ferrous surfaces shall be corrosion protected by a bonded epoxy coating applied prior to valve assembly to assure coverage of all surfaces.

3. Saddles: Saddles shall be made of a malleable material and have flat stainless steel straps. Rubber gaskets shall be required for all pipe sizes and classes. Lead gaskets will not be allowed. Saddles shall provide full support around the circumference of the pipe and have a bearing area of sufficient width along the axis of the pipe 1-1/2 inch minimum. Saddles shall not have lugs that will dig into the pipe when the saddle is tightened. The U-bolt type strap will not be allowed for PVC pipe.

4. Saddles (Force Main): Tapping saddles for low pressure force main connections shall be brass or stainless steel, appropriately sized for the pipe material being tapped. The U-bolt type saddle will not be allowed. Brass bushing and stainless steel close nipple shall be used as necessary to reduce the corporation stop outlet to 1-1/4 iron pipe thread.

2.9 SERVICE METERS AND EQUIPMENT

1. Service Meters: Service meters larger than 1-inch shall be determined based on flow calculations provided by the Customer's Engineer. Service meters 2 inches and smaller shall be supplied by the AUTHORITY. Residential service meters shall be 5/8 inch x 3/4 inch, ¾ inch or 1 inch magnetic-drive, positive displacement, flat nutating disc type conforming to AWWA C700 unless otherwise shown. The meter maincase shall be cast from lead free alloy containing minimum 85 percent copper. Maincases shall be of the removable bottom cap type with the bottom cap secured by non-magnetic, stainless steel bolts. Meters must be adaptable to a field programmable absolute encoder register without interruption of customer service. The measuring chamber shall be of a two-piece snap-joint type with no fasteners and shall be made of a non-hydrolyzing synthetic polymer. Meters shall contain a removable polypropylene plastic strainer screen located near the maincase inlet port, before the measuring chamber.

2. Meter Yokes: Yokes for normal meter settings (5/8 inch x 3/4 inch) have a cartridge type dual check valve with ball yoke valve compatible with service line used. Units shall be equipped with expansion connectors.

3. Copper Meter Setters: Setters shall have ball valve inlet and ASSE approved angle dual check valve outlet with cartridge style dual check valve in the by-pass. Copper setter size shall match meter size.

4. Meter Box: Each single meter setting shall be installed in accordance with Standard Detail SC-1. Each double meter setting shall be installed in accordance with Standard Detail SC-3. The plastic meter box shall be 18 inches deep and shall be equipped with a 11-1/2 inch cast iron cover with a single hole for meter antenna placement. For single meter installations in pavement, or high traffic areas, a concrete meter box shall be installed in accordance with Standard Detail SC-2. For new installations, meter boxes shall not be placed in areas subject to vehicular traffic.

5. Large Service Meters: Each 1 1/2 inch to 2 inch service meter shall be installed in accordance with Standard Detail M-1. All meters shall be equipped with Neptune R900 antennae. Turbine meters may be used on a case-by-case basis upon approval by the AUTHORITY.

6. Large Meter Structures: Meter structures for 1 1/2 inch to 2 inch meters shall be in accordance with Standard Detail M-1. Structure shall be 30 inch diameter x 30 inch deep, polyethylene, black exterior, white interior, heavy wall, round box with cast iron monitor frame and cover with a single hole provided for meter antenna placement.

2.10 FIRE METERS, MASTER METERS, AND EQUIPMENT

1. Fire Service: Meters 4 inch and larger shall be fire service meters. The meter shall have a flow and accuracy range as determined by the AUTHORITY, and shall conform to AWWA C703 and be Underwriters Laboratory (UL) Listed and Factory Manual (FM) approved for fire service with ANSI/ASME B16.1 Class 125 standard flanges and maximum working pressure of 175 psi. Bypass for the compound unit shall be right hand, furnished with piping, check valve, and ball valve. The fire service meter shall be installed according to Standard Detail FM-1. Minimum pipe size to the meter vault shall be 6-inches. The meter assembly shall have a Neptune R900 external antennae.

2. Master/Mainline Meters: Master/Mainline meters shall be for meters 4 inch and larger and shall meet the same criteria as specified for fire service meters.

3. Vaults: All fire service meters and master meters enclosed in a meter vault shall be equipped with Neptune R900 external antennae . External antennae shall be mounted through precast penetrations in the vault top, not the access hatch. Meter vaults constructed of masonry brick or block will not be acceptable. Vaults shall be precast top-joint style utility vaults. Minimum dimensions and special details shall be as given in Standard Detail FM-1 for the size meter assembly required. Vault shall include precast pipe penetrations with flexible watertight pipe-to-structure boot connections. Joints on precast unit shall be sealed with an asphaltic butyl compound to make them watertight. Access hatch shall have features including, but not limited to, channel frame, drain coupling, automatic hold-open arm, padlock hasp and compression spring assist lifting mechanism.

4. Gauges: Pressure gauge shall be installed on each side of meter assembly. Pressure gauges at meter vault shall be bronze Bourdon tube-type in cast aluminum case, with male IPT connection at bottom, at least 4-1/2 inches face diameter, with 0-300 pounds range. The gauges shall be supplied with brass piston-type pulsation dampener, compatible with the gauge furnished.

2.11 MISCELLANEOUS VALVES

1. Corporation Stops: All inlet threads shall conform to ANSI/AWWA C800, commonly known as the “Mueller (CC)” thread. Standard compression fittings will not be allowed. Pipe stiffener inserts are required and shall be by the same manufacturer as the corporation stop.

    1) Water Service (up to 1 inch): Shall be CC x Copper Tubing Size (“CTS”) pack joint connections with the inlet and outlet being the same size, ball valve type.

2) Water Service (1 1/2 inch and greater): Shall be CC x CTS pack joint or CC x Iron Pipe Thread ("IPT") connections with the inlet and outlet being the same size, ball valve type. Iron pipe thread may be either Male Iron Pipe Thread ("MIPT") or Female Iron Pipe Threat ("FIPT").

3) Low Pressure Force Main Service: Shall be CC x IPT or MIPT x IPT connections for all low pressure force main applications. Inlet and outlet shall be the same size, ball valve type. Typical residential sewer connections shall have a 1 ¼ inch connection. For typical residential sewer connections, corporation stops shall be 1 ¼ inch or 1 ½ inch with the use of brass bushing and stainless steel nipple or reducing nipple only as necessary on outlet side of corporation stop.

2. Curb Stops (Low Pressure Force Main Service): Polyethylene curb stop shall be used for polyethylene low pressure force main applications. Curb stop valve shall be rated at 200 psi, with IPS compression connections with a ratcheting handle.

3. Air Release Valve (Water): Pressure air release valves shall be installed at high points in the waterline or as selected by the AUTHORITY. Air release valve shall be combination air and vacuum valve conforming to ANSI/AWWA C 512 with a cast iron body, stainless steel float, bronze or stainless steel trim, Buna N seat, and threaded pipe inlet. Valve shall have a working pressure of 200 psi or greater. Air release valves shall have a minimum 5/64 inch orifice for 1-inch valves, and minimum 3/32 inch orifice for 2-inch valves. Air release valves shall be installed in accordance with Standard Details AR-1 for 2 inch valves or AR-2 for 1 inch valves. Compact fittings may be required for sites with low height clearance.

4. Air Release Valve (Sewer):

1) Air release valves for sewer will be determined based on working pressures.

2) Provisions shall be made for air release valves to be removed to allow for back-flushing without taking the sewage force main out of service.

5. Force Main Air Release Valves: Air release valves shall be single bodied combination air valve intended for sewage service. Combination air valve shall have a threaded pipe inlet, fusion bonded epoxy coated metal body and include backflushing attachment. Air release valve shall have a minimum working pressure of 250 psi (See Standard Detail AR-4). Air release valves on smaller, low pressure force mains, when approved by the AUTHORITY, may have a reinforced nylon body and a minimum working pressure of 150 psi (See Standard Detail AR-3).

6. Supply Stop Valves: Stop valves shall be angle type polished chrome plated shut-off stops with inlet end threaded and outlet end compression fitting to match fixture fittings.

7. Combined Pressure-Temperature Relief Valve: Shall automatically reseat and have bronze body, non-mechanical seat-to-disc alignment, positive thermostat, and threaded ends. Valve shall have a pressure range of 75 to 160 psi and provide temperature relief at 210 degrees F. Valve shall meet ANSI Z 21.22.

8. Blow-off Valves: Blow-off valves shall be installed at low points in the waterline or as selected by the AUTHORITY. Blow-offs shall be field assembled in accordance with Standard Detail BC-1. 2 inch blow-off valves shall be installed at ends of waterlines. Concrete bulkhead anchors shall be provided at all end of line blow-off assemblies as shown in the applicable Standard Details.

9. Automatic Blow-off Valves: Automatic blow-off valves shall be installed at locations as required on the plans, or as selected by the AUTHORITY. Blow-offs shall be field assembled in accordance with Standard Detail BC-2, and shall be preceded by a 2-inch water meter as part of the assembly. Where pressure exceeds 125 psi, a pressure reducing valve shall be installed between the meter and automatic blow-off valve. Automatic blow-off valves shall have an integrated programmer, sample valve, and thermal control valve included with installation.

10. Ball Valves: Ball valves for 2 inch and smaller lines shall be brass, full port and must be in accordance with NSF, UL and FM specifications. Ball valves shall have female iron pipe threads, a handle that is a minimum of 3 inches long and rated at minimum 600 WOG and 150 WSP.

11. Sample Tap Assembly: The sample tap shall be equipped with an aluminum cover with padlock provision, ¾ inch hose connection, vent tube, brass interior pipe, galvanized riser pipe and brass interior pipe, galvanized riser pipe and brass valve body.

12. Hose Bibs: Assembly shall be anti-contamination wall faucet. Valve shall be furnished with approved vacuum breaker which complies with ANSI/ASSE 1011 and has 3/4 inch male hose threads. Valve shall be of brass construction with adjustable packing nut and deep stem guard, Teflon impregnated packing and standard "O" size washer and wheel handle. Inlet shall be 1/2 inch copper tube.

13. Floor Drains: Floor drains shall be coated cast iron with double drainage flange, weepholes, threaded outlet connection, integral bell trap, and adjustable polished nickel alloy round removable strainer. Strainer shall be 6 inches in diameter and shall be made with light duty grate in buildings except in traffic areas where medium duty shall be used.

14. Pressure Gauges: Pressure gauges shall be bronze Bourdon tube in drawn steel or aluminum case with male 1/4 inch IPT connection at bottom, at least 4 1/2 inch face diameter with 0-300 psi range, installed with lead free brass piston type pulsation dampener. Gauges on the suction side of pumps shall be a pressure and vacuum gauge with a 0-30 psi range. Each gauge shall be mounted with a bronze ball cock to allow removal or servicing and a piston type pressure snubber to protect the gauge from rapid changes in line pressure. Gauges for use in wastewater applications shall be isolated from direct contact with wastewater by means of a diaphragm type isolator.

15. Pipe Repair Clamps: Shall be of stainless steel, type 304 with pre-assembled bolting mechanism.

2.12 RELATED ITEMS

1. Valve Boxes: Adjustable cast iron valve boxes of suitable diameter, length, and design shall be furnished and installed for all valves buried in the earth, unless otherwise noted. The valve boxes shall be a 3-piece screw type in accordance with Standard Detail VB-1, with 5 ¼ inch shaft. Two-piece boxes will also be acceptable in accordance with Standard Detail VB-2, and shall be installed with valve box adapter. Base shall be of sufficient size and configuration to support the box without resting on the pipe or valve. The word “water” shall be cast on the box lid in letters not less than 1 inch high on all water valves. Valve boxes shall be minimum ASTM A-48 cast iron.

2. Y-Strainers: Shall have bronze body construction, threaded ends, 20 mesh stainless steel screen, solid retainer cap with straight threads and gasket. Strainers shall be suitable for 250 psi working pressure.

3. Valve Operators: Shall be either handwheel or wrench for nut operated valves as indicated on the plans. Minimum two wrenches shall be provided by the manufacturer of nut operated valves.

PART 3 EXECUTION

3.1 INSPECTION

1. General: Examine the areas and conditions under which Work of this Section will be performed. Correct conditions detrimental to proper and timely completion of work. Do not proceed until unsatisfactory conditions have been corrected.

3.2 INSTALLATION - ALL VALVES

1. General: Valves shall be cleaned to remove all dirt or other foreign material. Valve installation shall comply with Standard Details and the Manufacturer's recommendations. Gate valve extensions are required where depth from the finished ground surface to the top of the operating nut exceeds 48 inches.

2. Reducers: Reducers shall be located inside the valve vault to assist with future replacements and allow for upsizing.

3. Stems: Shall be oriented for accessibility as approved by the AUTHORITY's representative. Do not install valves with stems in the downward direction.

4. Setting of Valves: A valve box shall be provided for every valve. The valve box shall not transmit shock or stress to the valve and shall be centered and plumb over the wrench nut of the valve, with the box cover flush with the surface of the finished grade or as directed by the AUTHORITY's representative. Concrete collars are required on all valve boxes. Valves boxes shall be installed in accordance with the Standard Details VB-1 and VB-2.

5. Pressure Reducing Valves: Shall be installed according to Standard Details RV-1 and RV-2.

6. Transmitting Forces: Valves and valve boxes shall be installed so no forces are transmitted to the valve through the piping supports or valve boxes.

7. Cleaning: All valves and appurtenances shall be flushed clear of all foreign material after installation.

8. Calibration: CONTRACTOR shall furnish the service of factory authorized service to instruct and check out the calibration of control valves.

9. Testing: Field test all valves and appurtenances for proper operation, proper adjustments and settings, freedom from vibration, binding, scrapings, and other defects. Check all valve supports for strength and high quality workmanship. All defects shall be corrected to the satisfaction of the AUTHORITY. Hydrostatic and leakage tests shall be in accordance with Section 33 03 00 - Utility Pipe and Materials.

3.3. METER INSTALLATION

1. Service meters shall be installed per Standard Detail SC-1, SC-2, SC-3, SC-4, M-1, and FM-1.

3.4 LOCATION MARKERS

1. Refer to Section 31 23 33 Trenching and Backfilling, Section 33 10 00 Water Utilities and Section 33 30 00 Sanitary Sewerage Utilities, and Standard Details for location marker requirements.

3.5 DISINFECTION

1. Refer to Section 33 10 00 Water Utilities for disinfection requirements.

END OF SECTION

SECTION 33 10 00 - WATER UTILITIES

PART 1 GENERAL

1.1 DESCRIPTION

1. Work Included: Furnish all labor, materials, tools, transportation, supplies, equipment, testing, and disinfection of the water main shown on the plans.

2. Related Sections: Additional Sections of the Documents which are referenced in this Section include:

   1) Section 01 66 00 – Product Delivery, Storage, and Handling Requirements

   2) Section 03 30 00 – Cast-in-Place Concrete

   3) Section 31 23 33 – Trenching and Backfilling

   4) Section 33 03 00 - Utility Pipe and Materials

   5) Section 33 04 00 - Valves and Cocks

   6) Section 33 12 19 – Water Utility Distribution Fire Hydrants

1.2 REFERENCES

1. General: The work shall comply with the most recent standards or tentative standards as published at the date of the contract and as listed in this specification using the abbreviation shown.

2. American National Standards Institute (ANSI)/American Water Works Association (AWWA):

   1) C651 Standard for Disinfecting Water Mains

   2) C652 Disinfecting Water Storage Facilities

3. National Science Foundation

   1) 14 Plastic Piping System Components and Related Materials

   2) 61 Drinking Water System Components – Health Effects

   3) 372 Drinking Water System Components – Lead Content

4. Virginia Administrative Code

   1) 12VAC5-590 Virginia Department of Health (VDH) *Waterworks Regulations*

1.3 QUALITY ASSURANCE

1. Contractor Responsibilities: Use adequate numbers of skilled workmen who are thoroughly trained and experienced in the necessary crafts and who are completely familiar with the specified requirements and the methods needed for proper performance of the work in this section.

1.4 DELIVERY, STORAGE, AND HANDLING

1. General: Shall be in accordance with Section 01 66 00 – Product Delivery, Storage, and Handling Requirements.

PART 2 PRODUCTS

2.1 MATERIALS

1. Pipe and Fittings, Joints, and Coating: Water main pipe shall be at the CONTRACTOR's option either PVC or Ductile Iron, except where specified on plans. Ductile Iron shall be used for water lines in undeveloped areas which are non-adjacent to existing roadways. All pipe, fittings, joints, coatings, and linings shall be in accordance with the Section 33 03 00 - Utility Pipe and Materials.

2. Valves: All valves shall be in accordance with Section 33 04 00 - Valves and Cocks.

3. Meters (service, master, fire): All meters shall be in accordance with Section 33 04 00 - Valves and Cocks.

4. Tapping devices: All tapping devices shall be in accordance with Section 33 04 00 – Valves and Cocks.

5. Concrete: Miscellaneous concrete shall be in accordance with Section 03 30 00 – Cast-in-Place Concrete.

6. Tie Rods: Tie rods for hydrant clamping shall be ¾ inch threaded stainless steel or corten steel. Compatible tie bolts and nut or clamps shall be similarly rustproof treated. Tie rods shall be used for appurtenance clamping in accordance with Section 33 03 00 – Utility Pipe and Materials.

7. Hydrants: All hydrants shall be in accordance with Section 33 12 19 – Water Utility Distribution Fire Hydrants.

PART 3 EXECUTION

3.1 SEPARATION OF WATER LINES, STORMWATER, AND SEWERS

1. General: Water mains shall be separated from sewer mains, stormwater mains, and sanitary drainfields in accordance with Section 33 03 00 – Utility Pipe and Materials.

3.2 WATER LINE SIZING AND DESIGN

1. General: In accordance with VDH Waterworks Regulations (12VAC5-590), minimum pipe size for water distribution systems shall be 4 inches. A pipe size of 2 inches shall be permitted for use on any water main when the run is less than 200 feet and serving 4 equivalent residential connections or less. A pipe size of 3 inches shall be permitted for use on any water main when the run is less than 600 feet for water lines serving 8 equivalent residential connections or less. Any water line designed with fire suppression must be a minimum of 6 inches in diameter or larger, or as otherwise required by the BRWA. The system shall be designed to maintain a minimum pressure of 20 psi at the maximum design domestic and fire flow demands.

3.3 DEAD END MAINS AND FUTURE CONNECTIONS

1. General: In accordance with VDH Waterworks Regulations (12VAC5-590), dead end mains should be minimized by the looping of all mains. Where dead end mains occur, a blow-off valve and concrete bulkhead anchor shall be placed at the end of the line in accordance with Standard Detail CA-5. In locations suitable for future extension, a gate valve, one joint of pipe, blow-off valve, and concrete bulkhead anchor shall be placed at the end of the line in accordance with Standard Detail CA-6.

3.4 INSTALLATION OF PIPE, FITTINGS, AND ACCESSORIES

1. Depth of Cover: Depth of cover shall be as specified in Section 31 23 33 – Trenching and Backfilling.

2. Pipe and Fitting Installation: All work shall be in accordance with Section 33 03 00 - Utility Pipe and Materials. The use of bends on water mains shall be minimized. Where bends are deemed necessary, the angle of bends used shall be minimized. For ninety-degree (90°) deflection angles, the use of two (2) forty-five degree (45°) bends shall be required. Water main bends not included on the Drawings shall be approved by the AUTHORITY prior to installation.

3. Valve Installation: All work shall be in accordance with Section 33 04 00 - Valves and Cocks.

4. Hydrant Installation: All work shall be in accordance with Section 33 12 19 – Water Utility Distribution Fire Hydrants.

3.5 LOCATING WATER MAINS AND APPURTENANCES

1. Marking tape: A plastic marking tape of the appropriate color shall be required on all water and sewer pipelines.

2. Tracer wire and box:

    1) In addition to marking tape, trace wire shall be installed for all water mains and brought to the surface in a tracer wire access box. Tracer wire shall be brought up through a tracer wire access box at all valve boxes, air release valves, blow-off assemblies, meter boxes, and at the end of a water line at the tie-in location to an existing line or plug (even if no valve is installed) as specified in Section 31 23 33 – Trenching and Backfilling and per Standard Detail TW-1.

    2) Where multiple appurtenances are in close proximity to each other, the number and location of tracer wire access boxes shall be as directed by the AUTHORITY. Install tracer wire boxes at the end of pipe lines, plug or tie-in to existing pipeline even if no valve or box/cleanout or manhole has been installed.

3. Electronic markers: Electronic markers are as specified in Section 31 23 33 – Trenching and Backfilling. Electronic markers shall be placed along all pipelines at a maximum spacing of 60 feet and at every tee and bend. Electronic markers shall be placed at each water service meter box, service connection over 10-feet in length, and as otherwise directed by the AUTHORITY's Project Representative.

4. Marking posts: Marking posts shall be as specified in Section 31 23 33 – Trenching and Backfilling. Marking posts shall be installed at water appurtenances that are located on undeveloped land and as directed by the AUTHORITY's Project Representative.

3.6 DISINFECTION

1. Disinfecting Water Mains: Water mains and accessories shall be disinfected using the "continuous-feed" or "slug method" in accordance with AWWA C651 and Virginia Code Section 12VAC5-590-1210 or most recent applicable Virginia codes and AWWA Standards. The "Tablet Method" described in AWWA C651 shall be allowed only if the pipes and appurtenances are kept clean and dry during construction. Where the Tablet Method is used, chlorine tablets shall be glued to the pipe with an adhesive accepted by the Virginia Department of Health.

    The CONTRACTOR shall obtain the most recent applicable AWWA standard. This standard shall be at jobsite with access granted to the AUTHORITY's Project Representative. Care shall be taken to minimize entrance of foreign material into pipe, fittings and valves. The main shall be flushed prior to disinfection

with sufficient flow to produce a velocity of 3.0 fps. Flushing shall take place in areas with adequate drainage.

Diameter (inches)	Flow Rate (gpm)
4	120
6	260
8	470
10	730
12	1,060
16	1,880

Final flushing shall follow to ensure that the chlorine concentration is not higher than that generally prevailing in the system. In no case shall the post-flushing chlorine residual fall outside the maximum or minimum allowable regulatory concentration limits.

2. Disinfecting Water Storage Tanks or Wetwells: Water storage tanks, wetwells, and accessories shall be disinfected in accordance with AWWA C652.

3. Disposal of Chlorinated Water:

   1) Chlorinated water shall not be discharged to any water course, drainage way, or stormwater system until complete dechlorination has been achieved. CONTRACTOR shall conduct on-site testing to confirm that chlorine has been removed from any water discharged to the environment or stormwater system.

   2) Discharge of chlorinated water to the sanitary sewer system will be considered and approved on a case-by-case basis by the AUTHORITY. CONTRACTOR will be required to continuously monitor the discharge and prevent hydraulic connection between the sewer and water distribution system.

4. Bacteriological Tests: Following final flushing, water samples shall be collected and tested for bacteriological quality in accordance with *Standard Methods for the Examination of Water and Wastewater* and shall show the absence of coliform bacteria. Samples shall be collected at the following locations,

   1) Every 1,200 feet of new water main,

   2) Each end of the new water main (within 20 feet from end),

   3) Each branch greater than 20 feet in length.

5. Sampling Procedure Options:

   1) Two samples shall be taken at each location, a minimum of 16 hours apart. All tested samples must indicate the absence of coliform bacteria contamination.

   2) Allow the water main to sit for a period of 16 hours without any water use. Collect two samples from each location a minimum of 15 minutes apart while the sample taps are left running. All tested samples must indicate the absence of coliform bacteria contamination.

   Samples will be collected (through the use of sample locations supplied by the CONTRACTOR) and delivered to the testing laboratory by the AUTHORITY within 48 hours of written notifications from the CONTRACTOR**.** If the initial disinfection fails to produce satisfactory samples, disinfection shall be repeated until all tested samples indicate the absence of coliform bacteria contamination. The CONTRACTOR may be responsible for costs associated with additional testing resulting from unsatisfactory samples.

3.7 SERVICE CONNECTIONS

1. General: All service connections shall be metered and provide a minimum pressure of 20 psi at each connection during maximum design flow. Consideration should be made in design to account for higher pressures that may be necessary for the facilities being served. All residential service lines shall be 1-inch diameter unless indicated otherwise on the drawings. The service lines shall be in accordance with Section 33 03 00 – Utility Pipe and Materials. All service taps for connecting service lines shall be made under pressure with proper tapping machine for the pipe being tapped.

2. Disinfection: The water main shall be tested and disinfected before service taps are made. All service connections shall be made in accordance with the Uniform Statewide Building Code.

3. Location: Tracer wire shall be installed with all service lines, in accordance with Section 31 23 33 – Trenching and Backfilling.

4. Service Casing Pipe: Casing pipe 4-inches and larger must be steel casing in conformance with Section 33 03 00 – Utility Pipe and Materials. Casing pipe smaller than 4-inches may be HDPE, PE, PVC, or Ductile Iron. All casing pipe must be sized large enough to easily handle the service line, tracer wire, and spacers where applicable.

END OF SECTION

SECTION 33 12 13.13 – WATER SUPPLY BACKFLOW PREVENTER ASSEMBLIES

PART 1 GENERAL

1.1 DESCRIPTION

1. Work Included: Provide complete, in place, and free from leakage, all backflow preventers in the locations indicated. All units shall comply with Virginia Department of Health regulations and applicable ASSE Standards.

2. Related Sections: Additional Sections of the Documents which are referenced in this Section include:

   1) Section 01 33 00 – Submittal Procedures

1.2 REFERENCES

1. General: The work shall comply with the most recent standards or tentative standards as published at the date of the contract and as listed in this specification using the abbreviation shown.

2. American National Standards Institute (ANSI)/American Society of Sanitary Engineers (ASSE):

   1) ASTM B505 Standard Specification for Copper Alloy Continuous Castings

   2) ASTM B584 Standard Specification for Copper Alloy Sand Castings for General Applications

   3) ASSE 1002 Anti-Siphon Fill Valves for Water Closet Tanks

   4) ASSE 1011 Performance Requirements for Hose Connection Vacuum Breakers

   5) ASSE 1012 Performance Requirements for Backflow Preventer with Intermediate Atmospheric Vent

   6) ASSE 1013 Performance Requirements for Reduced Pressure Principle Backflow Preventers and Reduced Pressure Principle Fire Protection Backflow Preventers

   7) ASSE 1020 Performance Requirements for Pressure Vacuum Breaker Assembly

   8) ASSE 1024 Performance Requirements for Dual Check Valve Type Backflow Preventers

   9) ANSI/ASSE 1035 Performance Requirements for Laboratory Faucet Backflow Preventers

   10) ASSE 1056 Performance Requirements for Spill Resistant Vacuum Breaker Assemblies

3. American Water Work Association (AWWA)

   1) AWWA C508 Standard for Swing-Check Valves for Waterworks Service, 2 in (50mm) Through 24 in (600 mm) NPS

4. National Standard Plumbing Code (NSPC)

5. Uniform Statewide Building Code (USBC)

6. Virginia Administrative Code (VAC):

1) 12VAC5-590 Virginia Department of Health (VDH) *Waterworks Regulations*

7. National Science Foundation (NSF)

1) 61 Drinking Water System Components – Health Effects

2) 372 Drinking Water System Components - Lead Content

1.3 SYSTEM DESCRIPTION

1. General: Units shall be specified in these technical specifications.

1.4 SUBMITTALS

1. General: Submittals shall be in accordance with Section 01 33 00 – Submittal Procedures. Each submittal shall be identified with precise use, line, and location.

2. Shop Plans: As a minimum, shop plans shall include manufacturer's names, class of materials, catalog, and engineering data showing compliance with the specified requirements.

1.5 DELIVERY, STORAGE AND HANDLING

1. Delivery: Deliver units to the job site packaged, tagged, and marked.

2. Storage: Store units at the job site in a manner to prevent damage and accumulation of dirt and rust.

1.6 QUALITY ASSURANCE

1. Approved Products List: The CONTRACTOR shall consult the AUTHORITY'S Approved Products List for acceptable materials and equipment.

PART 2 PRODUCTS

2.1 BACKFLOW PREVENTERS AND APPURTENANCES

1. General: All backflow preventers shall be installed in accordance with the NSPC, USBC, the VDH *Waterworks Regulations*, and the AUTHORITY's Cross Connection Control Program. All units shall conform with ANSI/ASSE, AWWA, and NSF Standards referenced in paragraph 1.2.2 of this section. All backflow preventers and appurtenances shall be compliant with NSF 372, NSF 61 – Part G, or bronze materials shall be "lead free" bronze alloys.

2. Backflow Preventer with Intermediate Atmospheric Vent: shall be bronze construction with two independent check valves and stainless steel internal parts. Units shall have a built in strainer. All units shall comply with ASSE 1012.

3. Reduced Pressure Zone Backflow Preventer Assembly (RPZ): shall consist of two independent check valves, relief port, four test ports, and an in-line strainer. The body of the unit shall be bronze construction and shall be supplied with ball type shutoff valves. Units shall conform with ASSE 1013.

4. Air Gap Drain Funnels: shall be provided if RPZ relief port units are to be connected to a drain. Units shall exhibit a physical air gap between the pipe connection and the RPZ relief port opening. Units shall be made by same manufacturer as the RPZ units and shall meet NSPC guidelines.

5. Thermal Expansion Tank: The tank shall have a polypropylene lined reservoir, butyl diaphragm and external air charging valve.

6. Double Check Valve Assembly: Assembly shall be designated backflow preventer, double check valve type, with two spring loaded independently operating check valves mounted in series. Test cocks shall be provided to allow testing of each valve without removal of the assembly from the line. The assembly shall be manufactured of corrosion resistant materials, with bronze and stainless steel working parts. The check valves shall be designed to open under normal flow conditions at a pressure differential not less than 1 psi at each check valve. The check valves will be designed to close when the downstream pressure is greater than the supply pressure. Unless otherwise noted, gate valves will be supplied independently and installed external to the check valve installation as noted on the plans and on the Standard Details. Units shall be Hersey No. 2, Watts 709, Mueller H-9505, or approved equal.

7. Pressure Vacuum Breaker: The Pressure Vacuum Breaker shall be ASSE 1020 approved, and supplied with full port ball valves. The main body and bonnet shall be bronze (ASTM B584 or ASTM B505), the loaded-air inlet shall use a silicone elastomer spring and seat disc. The entire assembly shall be accessible for maintenance and testing without removing the device from the line.

8. Spill-Resistant Vacuum Breaker: The Spill-Resistant Pressure Vacuum Breaker shall be ASSE 1056 listed, and supplied with full port ball valves. The assembly shall utilize a bronze (ASTM B 584 or ASTM B505) main body and an integrated modular check and float assembly made from thermoplastics. Springs shall be stainless steel. The valve shall incorporate a diaphragm to separate the air inlet from the potable water supply preventing spillage.

PART 3 EXECUTION

3.1 INSPECTION

1. General: Examine the areas and conditions under which Work of this Section will be performed. Correct conditions detrimental to proper and timely completion of work. Do not proceed until unsatisfactory conditions have been corrected.

3.2 INSTALLATION - ALL UNITS

1. Clean units to remove all dirt or other foreign material.

2. Valves and test ports shall be oriented for accessibility as approved by the OWNER's representative.

3. Backflow preventers shall be installed so no forces are transmitted to the valve through the piping.

4. All valves and appurtenances shall be flushed clear of all foreign material after installation.

5. Field test all valves and appurtenances for proper operation, proper adjustments, binding, scrapings, and other defects. Check all units for high quality workmanship. All defects shall be corrected to the satisfaction of the OWNER's representative.

6. Disinfect all units prior to putting in service in accordance with Section 33 10 00.

END OF SECTION

SECTION 33 12 19 – WATER UTILITY DISTRIBUTION FIRE HYDRANTS

PART 1 GENERAL

1.1 DESCRIPTION

1. Work Included: Furnish and install all hydrants as shown on the plans and as specified herein.

1.2 REFERENCES

1. General: The work shall comply with the most recent standards or tentative standards as published at the date of the contract and as listed in this specification using the abbreviation shown.

2. American Society of Sanitary Engineers (ASSE):

   1) 1052 Performance Requirements for Hose Connection Backflow Preventers

3. American Water Works Association (AWWA):

   1) C502 Dry Barrel Fire

4. Virginia Administrative Code (VAC):

   1) 12VAC5-590 Virginia Department of Health (VDH) *Waterworks Regulations*

5. National Science Foundation (NSF)

   1) 61 Drinking Water System Components – Health Effects

   2) 372 Drinking Water System Components - Lead Content

1.3 LOCATION

1. All hydrants shall be placed with main line gate valves and outside of the water table.

1.4 QUALITY ASSURANCE

1. Approved Products List: The CONTRACTOR shall consult the AUTHORITY'S Approved Products List for acceptable materials and equipment.

PART 2 PRODUCTS

2.1 EQUIPMENT

1. All hydrants shall be installed in accordance with the VDH *Waterworks Regulations*. All units shall conform with ASSE, AWWA, and NSF standards referenced in paragraph 1.2 of this Section. Units shall comply with NSF 372, NSF 61 – Part G, or bronze and brass materials shall be "lead free" alloys.

2. Fireflow requirements: Where a minimum fire flow requirement of 500 gpm cannot be achieved under peak conditions, only associated valving shall be installed and hydrant shall be delivered to the AUTHORITY for future installation upon flow requirements becoming available.

3. Fire Hydrants: Shall be traffic type with safety flange protection conforming to AWWA C502 and shall have not less than 6-inch diameter barrel, 5 ¼-inch minimum hydrant valve and a measured loss of not more than 2.5 psi through the hydrant at 600 gpm. Hydrant shall have a 6-inch mechanical joint connection

to the water main, two 2 1/2-inch hose outlets and one 4-1/2-inch pumper outlet and be so designed that if broken off, the hydrant valve will remain closed. Direction of opening shall be left (counterclockwise) with 1-1/2-inch pentagon shape operating nut, and nozzle threading shall be National Standard. Hydrants shall be Mueller, American Darling, or Kennedy traffic type hydrant.

4. Nonpotable Water Yard Hydrants: Nonpotable water yard hydrants shall be one-inch freeze proof, lever activated type. Outlet shall be fitted with a one-inch brass male hose thread. The hydrant shall be completely sealed to prevent surface or groundwater from entering the reservoir or service line. Hydrant shall bear proper signage to indicate nonpotable water.

5. Potable Water Yard Hydrants: Potable water shall be a freeze proof hydrant having a self-closing level handle meeting ADA requirements for operating at less than 5 pound force, ¾-inch NPT inlet, burial depth of 36 inches, unless otherwise noted. Hydrant shall have a self-contained reservoir below frost line to allow the stem to drain, preventing freeze damage. The hydrant shall have a ¾-inch brass hose nozzle and be fitted with an ASSE 1052 backflow preventer.

6. Fire Hydrants with check valve: Hydrant shall be traffic type with safety flange protection conforming to AWWA C502. Hydrant shall have a 5 ¼-inch minimum hydrant valve opening 3-ways (two hose nozzles, one pumped nozzle). The hydrant shoe shall incorporate a fabric and steel reinforced elastomeric flapper check valve inside the hydrant inlet, which allows normal operation and access to the hydrant main valve through bonnet or ground flange. Hydrant shall have a 6-inch mechanical joint connection to the water main, two 2 1/2-inch hose outlets and one 4-1/2-inch pumper outlet and be so designed that if broken off, the hydrant valve will remain closed. Direction of opening shall be left (counterclockwise) with 1-1/2-inch pentagon shape operating nut, and nozzle threading shall be National Standard.

2.2 FINISHES

1. General: All material delivered to the job site shall be provided in the original sealed and labeled containers of the paint manufacturer. The CONTRACTOR shall provide protection at all times during application of finishes to prevent drips, spills, splatter, overspray, and apply all finishes strictly in conformance with the manufacturer's specification and product data sheets. The CONTRACTOR shall have available on site such gauges, thermometers and other devices necessary to insure that application of finishes is in conformance with the manufacturer's recommendations.

2. Paint: To ensure compatibility, all paints and primers used for a specific task shall be provided by a single manufacturer. In the event that a manufacturer cannot supply a specified finish or system, a letter of certification shall be required to be submitted by the manufacturer stating that the system supplied is compatible with the adjacent finishes.

   In lieu of a field applied coating system, a factory applied polyurethane coating system may be used when offered by the hydrant manufacturer. Field repairs shall be made as necessary in accordance with manufacturer's recommendations and with coating systems approved by the manufacturer. A significant number of marks necessitating field coating repairs will require a full field coating be applied to the hydrant.

3. Weather and Site Restrictions: Weather conditions shall be in the range specified by the manufacturer for optimal application of the coating. If no manufacturer information is available, the following conditions shall be conformed to: No paint shall be applied when the surrounding air temperature is below 50 degrees F or when the temperature of the surface to be painted is below 50 degrees F. Paint shall not be applied in rain, snow, fog or mist, or when the relative humidity exceeds 85 percent or that the air temperature will drop below 40 degrees F within 18 hours after the application of the paint. Painting shall not be performed if dew is present or when moisture is expected.

4. Surface Preparation: Surface preparation shall conform to the manufacturer's recommendations and shall generally consist of removal of all oil, grease, stains, mill scale and loose rust.

5. Prime Coating: Prime coating shall be high solids maintenance coating of two coats at a minimum 2 mil dried film thickness per coat.

6. Color: Hydrant body, bonnet, hose nozzles, pumper nozzle and caps shall be painted silver. The side caps and/or bonnets shall be color coded by the AUTHORITY at a later date based on the color coding system developed by the National Fire Protection Association (NFPA). The color coding is as follows:

FLOW RATE (GPM)	COLOR
1,500+	Light Blue
1,000 – 1,499	Green
500 – 999	Orange
Less than 500	Red
Drafting only	Black

Private hydrants not maintained by the Authority shall be painted white.

7. Reflective Tape: Reflective tape is to be placed just below the bonnet of the hydrant by the CONTRACTOR upon installation and after the entire hydrant has been painted as specified in this section, or reflective sand may be used in the bonnet paint.

PART 3 EXECUTION

3.1 INSTALLATION

1. General: The installation shall be in accordance with the manufacturer's instructions and Standard Detail FH-1 (Fire Hydrant) or FH-2 (Fire Hydrant with check valve). Final grade around the fire hydrant shall be up to the bury line on the hydrant barrel. If this cannot be obtained, then the CONTRACTOR may be required to install a shorter/longer barrel within the hydrant assembly depending on local conditions. At least 0.5 cubic yards of VDOT #57 stone shall be provided under the base to allow drainage from the hydrant drain valve. Hydrants shall not be subject to surface flooding. CONTRACTOR shall paint hydrant body, bonnet, hose nozzles, pumper nozzle and caps specified in this section.

   1) Operation and Painting: Hydrants upon installation and prior to acceptance of the project, shall be painted and greased, and individually operated in the presence of AUTHORITY'S Construction Technician to verify the hydrant is wet.

   2) Hydrants shall be properly located, operable and plumb and at correct elevation.

   3) The area around the hydrant at a radius of 4 foot to be level and unobstructed as shown on Detail FH-1 and FH-2.

   4) Place a waterproof bags or "*Out of Service*" ring around pumper nozzle of the newly installed fire hydrants until the hydrant is placed in service and accepted by the AUTHORITY.

2. Yard Hydrants: The installation of yard hydrants shall be in accordance with the manufacturer's instructions.

3. Hydrant Disassembly: Should the need arise for disassembling the hydrant, such as for adding extensions, a brass sleeve shall be employed to protect the oil seals from damage when removing the hydrant housing from the upper stem.

3.2 PAINT APPLICATION

1. General: All coating materials shall be mixed, thinned, and applied at the rate and in the manner specified by the manufacturer. The specified dry film thickness (DFT) requirements shall be met and any deficiencies in film thickness shall be corrected by the application of an additional coat(s) of paint. Finish coats shall be uniform in color and sheen without streaks, laps, runs, sags, or missed areas. Hydrant steamer nozzle, side caps, and top cap shall be painted with the prime and finish coatings used for the hydrant body. Hydrant nozzle and top cap shall be removed from the hydrant prior to any prime and finish coatings being applied.

END OF SECTION

SECTION 33 30 00 - SANITARY SEWERAGE UTILITIES

PART 1 GENERAL

1.1 DESCRIPTION

1. Work Included: Furnish all labor, materials, tools, transportation, supplies, plant equipment, and appurtenances necessary for the complete and satisfactory construction of the sanitary sewer, and force main as shown on the plans, completed and ready for service.

2. Related Sections: Additional Sections of the Documents which are referenced in this Section include:

   1) Section 33 03 00 - Utility Pipe and Materials

   2) Section 33 04 00 - Valves and Cocks

   4) Section 31 23 33 – Trenching and Backfilling

   5) Section 03 41 00 - Precast Structural Concrete

1.2 REFERENCES

1. General: The work shall comply with the most recent standards or tentative standards as published at the date of the contract and as listed in this specification using the abbreviation shown.

2. American Association of State Highway and Transportation Officials Publications (AASHTO):

   1) H-17 Standard Specifications for Highway Bridges

   2) M 306 Standard Specification for Drainage, Sewer, Utility, and Related Castings

   3) M 105 Standard Specification for Gray Iron Castings

3. American Society for Testing and Materials (ASTM):

   1) C443 Standard Specification for Joints for Concrete Pipe and Manholes, Using Rubber Gaskets

   2) C478 Standard Specification for Circular Precast Reinforced Concrete Manhole Sections

   3) C877 Standard Specification for External Sealing Bands for Concrete Pipe, Manholes, and Precast Box Sections

   4) C923 Standard Specification for Resilient Connectors between Reinforced Concrete Manhole Structures, Pipes, and Laterals

   5) C990 Standard Specification for Joints for Concrete Pipe, Manholes, and Precast Box Sections Using Preformed Flexible Joints Sealants

   6) C1244 Standard Test Method for Concrete Sewer Manholes by the Negative Air Pressure (Vacuum) Test Prior to Backfill

   7) D1227 Standard Specification for Emulsified Asphalt Used as a Protective Coating for Roofing

8) D3575 Standard Test Methods for Flexible Cellular Materials Made From Olefin Polymers

9) D4817 Standard Classification for Rubber Compounding Materials—Stearic Acid

4. American Water Works Associations (AWWA):

1) C900 Polyvinyl Chloride (PVC) Pressure Pipe and Fabricated Fittings, 4 In. Through 60 In. (100 mm – 1,500 mm)

5. Virginia Department of Transportation (VDOT) - Road and Bridge Specifications:

1) 217 Hydraulic Cement Concrete

2) 224 Castings

1.3 DELIVERY, STORAGE, AND HANDLING

1. General: Comply with pertinent provision of Section 01 66 00 – Product Delivery, Storage, and Handling Requirements.

2. Delivery: Deliver manhole sections to project site in such quantities and at such times to assure continuity of installation. Store units at project site to prevent cracking, distortion, staining, or other physical damage, and so that markings are visible. Lift and support units only at designated points. Provide setting diagrams, templates, instructions and directions as required for installation. . Items delivered and installed at the site shall be structurally sound and free from cracks or major surface blemishes.

1.4 QUALITY ASSURANCE

1. Approved Products List: The CONTRACTOR shall consult the AUTHORITY'S Approved Products List for acceptable materials and equipment.

PART 2 PRODUCTS

2.1 GRAVITY SEWER

1. General: Gravity sewer pipe shall be PVC or ductile iron pipe, at the CONTRACTOR's option, unless otherwise indicated on the plans. All gravity sewer pipes shall be in accordance with Section 33 03 00 – Utility Pipe and Materials.

2. Fittings: Fittings shall be in accordance with Section 33 03 00 – Utility Pipe and Materials.

3. Sizing: Gravity sewer main shall be a minimum of 8 inches in diameter.

2.2 FORCE MAIN

1. General: Pressure pipe for force main installation shall be as indicated on the plans. Pipe and fittings shall be in accordance with Section 33 03 00 – Utility Pipe and Materials.

2. Fittings: Underground fittings shall be mechanical joint brass, PVC, or ductile iron fittings in accordance with Section 33 03 00 - Utility Pipe and Materials except where specifically noted on plans.

2.3 PRECAST CONCRETE STRUCTURES

1. Precast Structures: Precast concrete structures other than sanitary sewer manholes shall be in accordance with Section 03 41 00 – Precast Structural Concrete.

2.4 MANHOLES AND STRUCTURES

1. General:

   1) Concrete manholes shall be of precast construction. All concrete shall be rodded or vibrated to minimize honeycombing and assure water tightness.

   2) Manholes shall have pre-cast channels equal to full depth of pipe unless it is a new doghouse manhole installed on existing line.

   3) Where located in flood plains, or where the invert of the manhole is lower than normal groundwater elevation, manhole shall have a full exterior coating of high build epoxy, coal tar epoxy, meeting ASTM D1227 and joint wrap applied.

   4) Manhole Separation: Spacing between manholes shall not be greater than 400 feet measured from center-to-center of manholes.

   5) Where located at the bottom of steep slopes, manhole inverts shall have plastic modular channel systems.

2. Construction:

   1) Precast manholes shall conform to ASTM C478 and Standard Details as called for on the plans.

   2) The eccentric design manhole shall be used, except as shown on the plans.

   3) Minimum inside diameter shall be 48 inches unless noted on plans, with minimum of 5 inch thick walls. All manholes shall have monolithic bases except as shown on the plans. See Standard Details MH-1 and MH-2. Where interior drops are proposed, manholes are required to be larger in diameter. One interior drop requires a minimum of 5 feet diameter. Two interior drops require a minimum of 6 feet diameter.

   4) Drop manholes shall be used where invert differences are greater than 24-inches. The connection shall be channeled into the base of the manhole or installed through an interior drop. See Standard Details MH-4 and MH-7. Exterior drop connections shall not be permitted on new construction unless specifically approved by the AUTHORITY.

   5) Ventilation requirements for the line shall be followed when watertight covers are used.

3. Manhole Steps: All manhole steps shall have a solid polypropylene shell with a steel core. Steps shall have a minimum spacing of 12 inches and a maximum spacing of 16 inches, uniformly spaced throughout the manhole structure. Steps shall conform to Standard Detail MS-1.

4. Pipe-to-Concrete Structure Connections shall be in accordance with Section 33 03 00 – Utility Pipe and Materials.

5. Pipe Connections: Provision for indicated sanitary sewer pipe connections shall be made by means of an approved watertight, gasketed fitting similar to Harco fittings or approved equal.

6. Lateral Service Lines: Lateral service lines are to be connected to manholes if possible. Where depth to the gravity main exceeds 8 feet, a drop connection shall be used at the nearest manhole where practical. No more than 2 service connections or 4 total connections will be permitted at any manhole. Services into manholes shall be core drilled and installed with a flexible boot coupling in accordance with Section 33 03 00 - Utility Pipe and Materials.

7. Manhole Frames and Covers:

   1) Standard manhole frames and covers shall be of cast iron conforming to AASHTO M 306, AASHTO M 105, and VDOT Section 224. Standard frames and covers shall be as shown on Standard Detail FC-1 and have the following minimum dimensions:

      Cover Diameter – 26 inches

      Cover Thickness – 1 ½ inches

      Frame Opening – 24 inches

   2) Watertight manhole frames and covers shall be installed in areas subject to flooding or surface flow. Watertight frames and covers shall be of cast iron conforming to AASHTO M-306, AASHTO M-105, and VDOT Section 224. Watertight covers shall include a cam bolt lock lug assembly. Watertight frames and covers shall be as shown on Standard Detail FC-2 and have the following minimum dimensions:

      Cover Diameter – 26 inches

      Cover Thickness – 1 ½ inches

      Frame Opening – 24 inches

8. Concrete: Concrete used for shaping of manholes, channels, sidewalk, and miscellaneous work shall meet requirements of VDOT Section 217 Class A3 or C1.

9. Joints: Joints shall be confined rubber gasket joints in accordance with ASTM C443 for a watertight seal.

10. Frame-Chimney Seals:

    1) External seal: Frame seals and extensions shall be installed on all manholes where concrete grade-adjustment rings are installed. The frame seal and extension shall span the entire adjustment area of the manhole by connecting to the lower base flange of the frame casting and to the top of the manhole cone. Seal shall conform to the applicable material requirements of ASTM C923.

    2) Internal seal: Internal frame seals shall be installed on all manholes where grade-adjustment rings are not installed, and will also be allowed in areas with a high water table.

    3) Expanded Polypropylene (EPP) Grade-Adjustment Rings. As an alternate to an external or internal chimney seal, CONTRACTOR may use an EPP Grade-adjustment ring where the adhesive between the rings provides a watertight seal. The grade adjustment rings shall be manufactured from EPP meeting ASTM D3575 and ASTM D4819. Grade adjustment rings may contain either an upper and lower keyway (tongue and groove) for vertical alignment and/or an adhesive trench on the underside with a flat top. Finish or flat rings may either have a keyway (groove) on the underside for vertical alignment and/or an adhesive trench with a flat upper surface. These rings shall be available in heights (thicknesses) which will allow final adjustment of the frame and cover or grate to within ¼-inch to ½-inch of the specified final elevation. Finish rings may also have a keyway on the upper surface of the inner diameter to facilitate installation of an angle ring. Angle rings may either have an upper and lower keyway (tongue and groove) for vertical alignment and/or an adhesive trench on the underside. When required, the angle ring or rings shall allow final adjustment of the frame and cover to within 1/4-inch to ½-inch of the specified final elevation. Any adhesive or sealant used for watertight installation of the EPP grade adjustment rings shall be in accordance with manufacturer's recommendations.

11. Joint Wrap: Where required, manhole joints shall be installed with an exterior joint collar conforming to the material requirements of ASTM C877. The joint collar shall be installed according to the manufacturer's recommendations.

12. Interior Sealant: Where required or approved by the AUTHORITY, manholes shall receive a full interior coating manufactured to be corrosion resistant for withstanding the severe effects of hydrogen sulfide in a wastewater environment. Coating shall be applied in accordance with manufactures recommendations by an applicator trained and certified, and/or approved by the manufacturer and the AUTHORITY.

13. Exterior Sealant: Where located in flood plains, or where the invert of the manhole is lower than normal groundwater elevation, manhole shall have a full exterior coating of high build epoxy, coal tar epoxy, meeting ASTM D1227 and joint wrap applied.

2.5 VALVES AND BOXES

1. Valves: Force main valves, when shown on plans, shall be gate valves or plug valves in accordance with Section 33 04 00 – Valves and Cocks.

2. Valve Boxes: Valve boxes or vaults shall be provided for all underground valves. Valve boxes shall be in accordance with Section 33 04 00 – Valves and Cocks. Valve vaults shall be in accordance with Section 03 41 00 – Precast Structural Concrete.

PART 3 EXECUTION

3.1 LOCATING SEWER MAINS AND APPURTENANCES

1. Marking Tape: A green plastic marking tape shall be required on all sewer pipelines. Plastic marking tape shall be as specified in Section 31 23 33 – Trenching and Backfilling.

2. Tracer wire and access box:

    a. In addition to marking tape, trace wire shall be installed for all sewer mains, and brought to the surface in a tracer wire access box as specified in Section 31 23 33 – Trenching and Backfilling.

    b. Tracer wire shall be brought up through a tracer wire access box at all valve boxes, air release valves, flushing valves, cleanouts, forcemain connection points, sewerline markers, manhole structures, and at the end of a sewer line at the tie-in location to an existing line or plug (even if no cleanout or sanitary manhole is installed) per Standard Detail TW-1.

    c. Where multiple appurtenances are in close proximity to each other, the number and location of tracer wire access boxes shall be as directed by the AUTHORITY. Install tracer wire boxes at the end of pipe lines, plug or tie-in to existing pipeline even if no valve or box/cleanout or manhole has been installed.

3. Electronic markers:. Electronic markers are as specified in Section 31 23 33 – Trenching and Backfilling. Electronic markers shall be placed along all pipelines at a maximum spacing of 60 feet and at every wye. Electronic markers shall be placed at each sewer service cleanout, sewer forcemain service connection point and as otherwise directed by the AUTHORITY's Project Representative.

4. Marking posts: Marking posts shall be as specified in Section 31 23 33 – Trenching and Backfilling. Marking posts shall be installed at sewer appurtenances and sanitary manholes that are located on undeveloped land and as directed by the AUTHORITY's Project Representative.

3.2 SEPARATION OF WATER LINES, STORMWATER, AND SEWERS

1. General: Sanitary sewer shall be separated from water and stormwater lines in accordance with Section 33 03 00 – Utility Pipe and Materials.

3.3 INSTALLATION OF PIPE, FITTINGS, AND PRECAST STRUCTURES

1. General: Installation and testing of pipe, fittings, and appurtenances shall be in accordance with Section 33 03 00 – Utility Pipe and Materials.

2. Depth of Cover: Depth of cover shall be as specified in Section 31 23 33 – Trenching and Backfilling.

3. Low Pressure Force Main Testing: The CONTRACTOR shall perform hydraulic and pressure tests on low pressure force mains in accordance with water main testing procedures as detailed in Section 33 03 00.

3.4 MANHOLE INSTALLATION

1. Manholes: The subgrade and bedding for the monolithic base for the precast manhole shall be prepared similar to that for pipe. The invert channels shall be formed with concrete as shown on Standard Details MH-1 and MH-4 and shall be smooth and semi-circular in shape, conforming to the inside of the adjacent sewer section. Channel inverts shall be constructed to provide a smooth continuous positive slope between pipes. Changes in direction of flow (horizontally and vertically) shall be made with a smooth curve of as large a radius as size of the manhole will permit as shown on Standard Detail MH-3. The floor (bench) of the manhole outside of the channels shall be smooth and shall slope toward the channels not less than 2 inches per foot nor more than 4 inches per foot. Under no circumstances shall manholes or other structures be left in an incomplete condition such that surface water could enter into the sewer line. Where new manholes are installed on existing sewer lines, the base may be constructed separately from the first vertical section of the manhole as detailed in Standard Detail MH-2. The fall across a manhole shall be at least 0.2 feet, or 0.5 feet for a change of flow direction equaling 90 degrees or less.

2. Manhole Joints: Manhole frames, covers, and hatches, where confined rubber gasket joints are not available, shall be set on a double ring of butyl rubber rope caulk. When leveling is required manhole frames shall be set level on a full bed of mortar installed to the proper grade and cured prior to the application of the butyl caulk. Alternately, CONTRACTORS may use EPP grade adjustment rings and install per manufacturer's recommendations to create a watertight seal.

3. Connections to Existing Manholes: Flexible watertight connections shall be used when tying into existing manholes. Existing manholes with new connections shall be tested in the same manner as new manholes.

4. Installation of Manhole Stubouts: Manhole stubouts shall be provided where indicated or directed. Stubout pipe shall be 8 inch diameter unless otherwise indicated on the plans and shall be the same pipe material as the sewer pipe. Manhole stubouts shall be extended from the manhole a minimum of 10 feet, unless otherwise noted. Stubouts shall be sealed, braced, and marked as noted for tees and laterals.

3.5 MANHOLE TESTING

1. Manhole Exfiltration Testing: When required by or permitted by the AUTHORITY, an exfiltration test may be conducted on each manhole. Inlet and outlet lines shall be suitably plugged before starting the presoak period. After a presoak period of at least 4 hours and no more than 12 hours, the manhole shall be filled to the top of the casting. The amount of water required to maintain this level during a 2 hour test period shall be measured. Leakage shall not exceed 0.25 gallons per hour per foot depth.

2. Manhole Vacuum Testing: Unless otherwise approved by the AUTHORITY, manholes shall be tested by the vacuum method in accordance with ASTM C1244. Manholes shall be tested after assembly and shall include the casting on the manhole. Stubouts, manhole boots and pipe plugs shall be secured to prevent movement while the vacuum is drawn. Installation and operation of vacuum equipment and indicating devices shall be in accordance with equipment specifications for which performance information has been provided by the manufacturer and approved by the Virginia Department of Environmental Quality. The procedure is outlined as follows:

1) A vacuum of 10 inch Hg shall be drawn on the manhole, the valve on the vacuum line of the test head closed, and the vacuum pump shut off. The time shall be measured for the vacuum to drop to 9 inch Hg.

2) The manhole shall pass if the time for the vacuum reading to drop from 10 inch Hg to 9 inch Hg meets or exceeds the values indicated in Table 1.

3) If the manhole fails the test, necessary repairs shall be made and the vacuum test and repairs shall be repeated until the manhole passes the test or the manhole shall be tested in accordance with the standard exfiltration test and rated accordingly.

4) If a manhole joint material is pulled out during the vacuum test, the manhole shall be retested after it is disassembled and the joint material replaced.

TABLE 1 – Minimum Test Times for Various Manhole Diameters in Seconds

	Diameter inches								
Depth (ft)	30	33	36	42	48	54	60	66	72
	Time in seconds								
8	11	12	14	17	20	23	26	29	33
10	14	15	18	21	25	29	33	36	41
12	17	18	21	25	30	35	39	43	49
14	20	21	25	30	35	41	46	51	57
16	22	24	39	34	40	46	52	58	67
18	25	27	32	38	45	52	59	65	73
20	28	30	35	42	50	53	65	72	81
22	31	33	39	46	55	64	72	79	89
24	33	36	42	51	59	64	78	87	97
26	36	39	46	55	64	75	85	94	105
28	39	42	49	59	69	81	91	101	113
30	42	45	53	63	74	87	98	108	121

END OF SECTION

Appendix A
Standard Details

STANDARD DETAILS INDEX

NO.	TITLE
AR-1	2" AIR RELEASE VALVE WATER
AR-2	1" AIR RELEASE VALVE WATER
AR-3	AIR RELEASE VALVE SEWER (WORKING PRESSURES LESS THAN OR EQUAL TO 100PSI)
AR-4	AIR RELEASE VALVE SEWER (WORKING PRESSURES GREATER THAN 100PSI)
BC-1	BLOW-OFF CHAMBER
BC-2	AUTOMATIC BLOW OFF VALVE DIRECT DISCHARGE UNIT
BP-1	BACKFLOW PREVENTER DOUBLE CHECK VALVE ASSEMBLY 3/4" TO 2"
BP-2	BACKFLOW PREVENTER DOUBLE CHECK VALVE - 3" TO 8"
BP-3	BACKFLOW PREVENTER REDUCED PRESSURE ZONE ASSEMBLY (FOR LAWN IRRIGATION SYSTEMS)
CA-1	CONCRETE ANCHOR FOR HORIZONTAL AND SAG ANCHORS
CA-2	CONCRETE ANCHOR FOR CREST ANCHORS
CA-3	CONCRETE ANCHOR FOR SLOPES OVER 20%
CA-4	WATERLINE BULKHEAD ANCHOR
CA-5	WATERLINE BULKHEAD ANCHOR WITH BLOW-OFF
CA-6	WATERLINE BULKHEAD ANCHOR WITH GATE VALVE & BLOW-OFF
CA-7	WATERLINE AIR RELEASE BULKHEAD ANCHOR WITH BLOW-OFF
CA-B	VALUES OF B (IN FEET) FOR VERTICAL PIPE ANCHORS
CE-1	CONCRETE ENCASEMENT
CE-2	SANITARY AND STORM SEWER CROSSING ENCASEMENT
CO-1	SANITARY SEWER CLEANOUT (TERMINAL LINE CLEANOUT)
CO-2	SINGLE SANITARY SEWER CLEANOUT
CO-3	DOUBLE SANITARY SEWER CLEANOUT
CO-T	CLEANOUT COVERS STANDARD & TRAFFIC BEARING
CO-V	VENTILATED SANITARY SEWER CLEANOUT - FOR USE WITH ANY STANDARD CLEANOUT
CS-1	SEALED CASINGS INSTALLATION
CS-2	TYPICAL WATER OR SEWER MAIN LOCATION WITHIN VDOT RIGHT-OF-WAY
FC-1	STANDARD MANHOLE FRAME & COVER
FC-2	WATERTIGHT MANHOLE FRAME & COVER
FE-1	CHAIN LINK FENCE INSTALLATION
FH-1	FIRE HYDRANT INSTALLATION
FH-2	FIRE HYDRANT WITH CHECK VALVE INSTALLATION
FM-1	FIRE FLOW METER INSTALLATION
FM-2	FIRE FLOW METER VAULT EXTERNAL BYPASS
FV-1	FORCE MAIN FLUSHING VALVE
GP-1	LOW PRESSURE SEWER FORCE MAIN - MAIN LINE CONNECTION (LARGER THAN 2")
GP-2	LOW PRESSURE SEWER FORCE MAIN CONNECTION (1-1/4" TO 2")
GP-3E	RESIDENTIAL E-ONE MODEL 2010-74 PUMP STATION INSTALLATION
GP-3L	RESIDENTIAL LIBERTY OMNIVORE MODEL 2472-LSGX PUMP STATION INSTALLATION
GP-4	PUMP STATION SLAB MOUNTING DETAIL
GP-8	DIVISION OF PRESSURE SEWER/SMALL GRINDER PUMP (SGP) INSTALLATION DIAGRAM
HC-1	WATER-SANITARY SEWER CROSSING DETAIL
HC-2	SANITARY SEWER ROOF DRAIN DISCONNECTION
M-1	LARGE SERVICE METER INSTALLATION (2-INCH)
MH-1	SANITARY SEWER PRECAST STANDARD MANHOLE (ECCENTRIC WITH MONOLITHIC BASE)
MH-2	PRECAST CONCRETE MANHOLE (FOR USE ON EXISTING LINES)
MH-3	MANHOLE INVERT CHANNELING
MH-4	SANITARY SEWER PRECAST EXTERNAL DROP MANHOLE (ECCENTRIC WITH MONOLITHIC BASE)
MH-5	SANITARY SEWER MANHOLE VENTILATION
MH-6	INSIDE DROP CONNECTION
MS-1	STANDARD MANHOLE STEP
RV-1	PRESSURE REDUCING VALVE WITH LOW FLOW BYPASS (FOR PRV'S 3" AND LARGER)
RV-2	PRESSURE REDUCING VALVE (FOR PRV'S SMALLER THAN 3")
RV-3	PRESSURE RELIEF VALVE
RV-5	PRESSURE REDUCING VALVE VAULT WITH REDUNDANCY AND INTERNAL RELIEF
SC-1	STANDARD 5/8" X 3/4", 3/4", AND 1" SINGLE WATER SERVICE CONNECTION
SC-2	5/8" X 3/4", 3/4", AND 1" SINGLE WATER SERVICE CONNECTION IN TRAFFIC AREAS
SC-3	DOUBLE METER INSTALLATION
SC-4	METER BANK DETAIL
TB-1	SANITARY SEWER TRENCH BED
TB-2	STORM SEWER TRENCH BED
TB-3	PRESSURE MAIN TRENCH BED
TB-4	FORCE MAIN/ SANITARY SEWER PARALLEL INSTALLATION TRENCH BED
TW-1	TRACER WIRE ACCESS BOX
VB-1	3-PIECE VALVE BOX INSTALLATION
VB-2	2-PIECE VALVE BOX INSTALLATION

NOTES:

1. IN TRAFFIC AREAS, USE PRECAST STRUCTURE IN ACCORDANCE WITH STANDARD DETAIL MH-2 MANHOLE WITH STANDARD TRAFFIC BEARING FRAME AND COVER PER STANDARD DETAIL FC-1. STRUCTURE SHALL BE PLACED ON CONCRETE BLOCK, PER ASTM C-139, OR ON A POURED 12" X 8" CONCRETE RING FOOTING TO SUPPORT CHAMBER, LEAVING OPENING BELOW PIPE. FILL SPACE INSIDE RING OR BLOCK WITH CLEAN GRAVEL FOR DRAINAGE. CONCRETE FOOTING MAY BE ELIMINATED IF SOLID ROCK IS ENCOUNTERED.
2. ALL PIPE AND FITTINGS SHALL BE LEAD FREE BRASS, STAINLESS STEEL, OR EPOXY COATED DUCTILE IRON. GALVANIZED AND BLACK IRON PIPE WILL NOT BE ALLOWED.

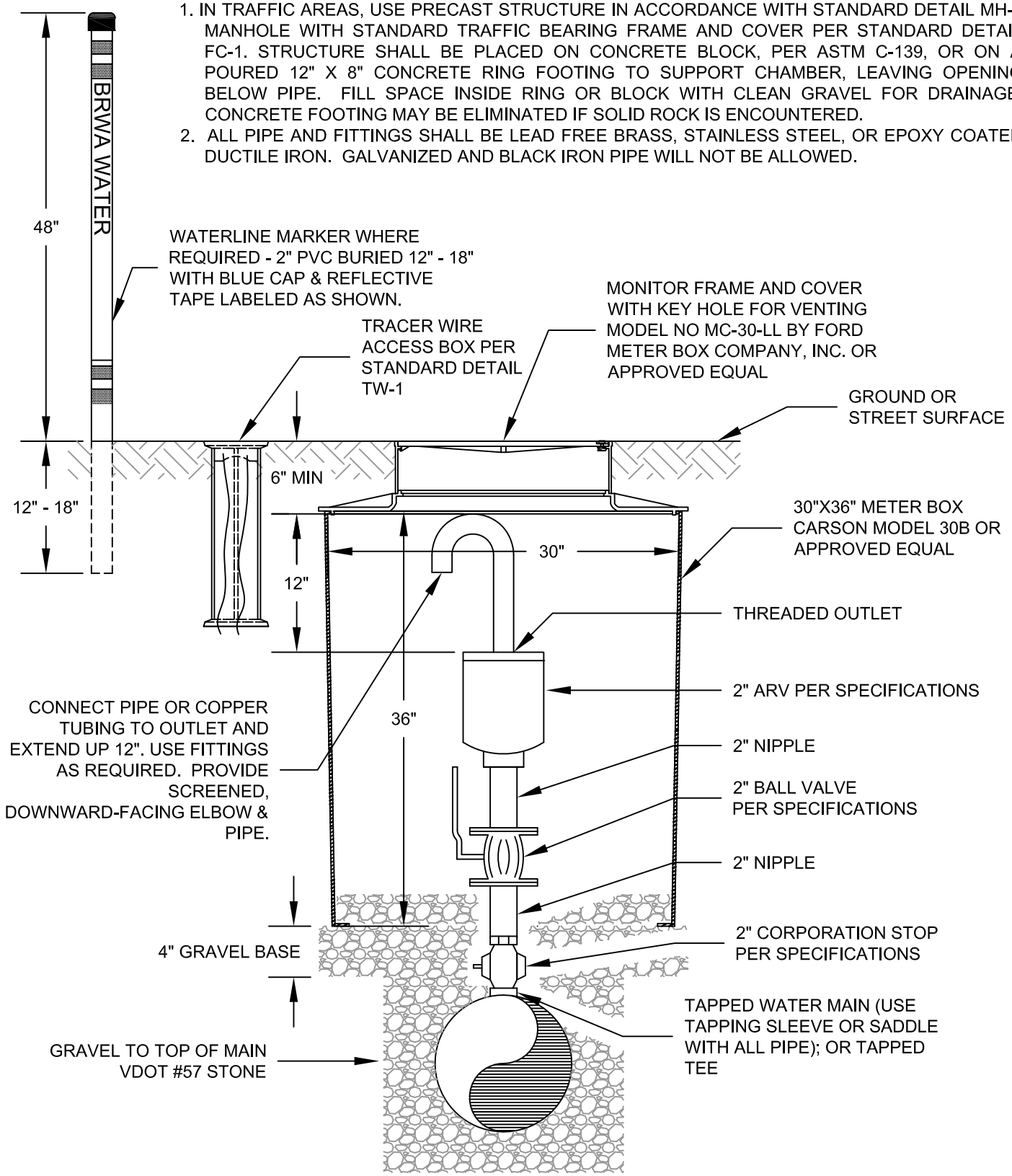

Bedford Regional Water Authority

No.	Date
1	August 20, 2012
2	October 6, 2017
3	December 12, 2017
4	

2" AIR RELEASE VALVE ("ARV")
WATER

Detail:

AR-1

NOTES:

1. IN PAVEMENT, USE PRECAST CONCRETE CHAMBER PER STANDARD DETAIL SC-2.
2. ALL PIPE AND FITTINGS SHALL BE LEAD FREE BRASS, STAINLESS STEEL OR EPOXY COATED DUCTILE IRON. GALVANIZED AND BLACK IRON PIPE WILL NOT BE ALLOWED.

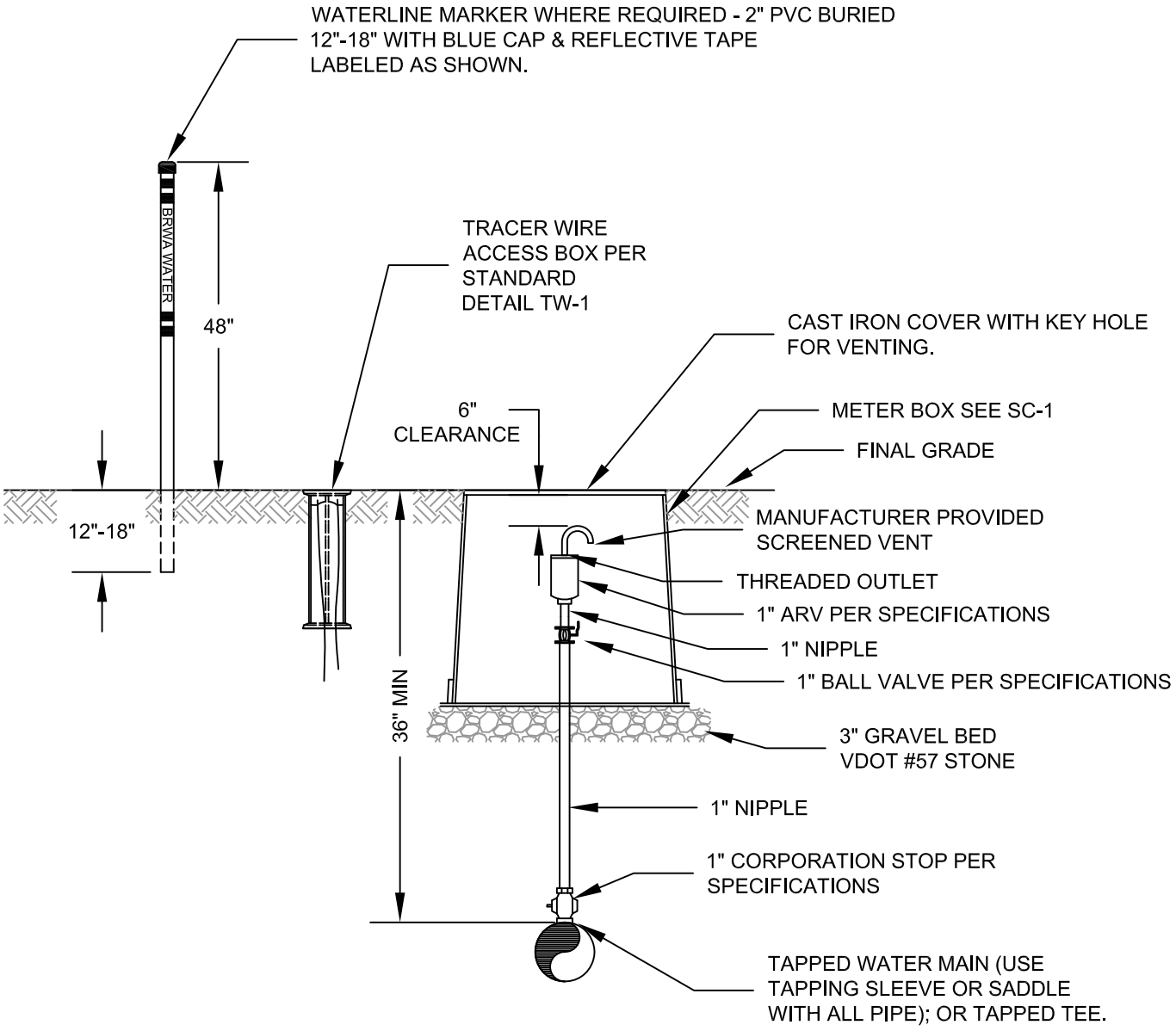

Bedford Regional Water Authority

No.	Date
1	August 20, 2012
2	October 6, 2017
3	December 12, 2017
4	

1" AIR RELEASE VALVE ("ARV")
WATER

Detail:

AR-2

NOTES:

1. ALL PIPE AND FITTINGS SHALL BE PVC, STAINLESS STEEL, OR EPOXY COATED DUCTILE IRON. GALVANIZED AND BLACK IRON PIPE WILL NOT BE ALLOWED.
2. WHERE DEPTH REQUIRES, A RISER SHALL BE USED FROM THE TEE TO THE BASE OF THE MANHOLE. TEE AND RISER SHALL BE THE SAME DIAMETER AS THE PIPE, a, OR A MINIMUM DIAMETER OF $\frac{1}{2}$ a.

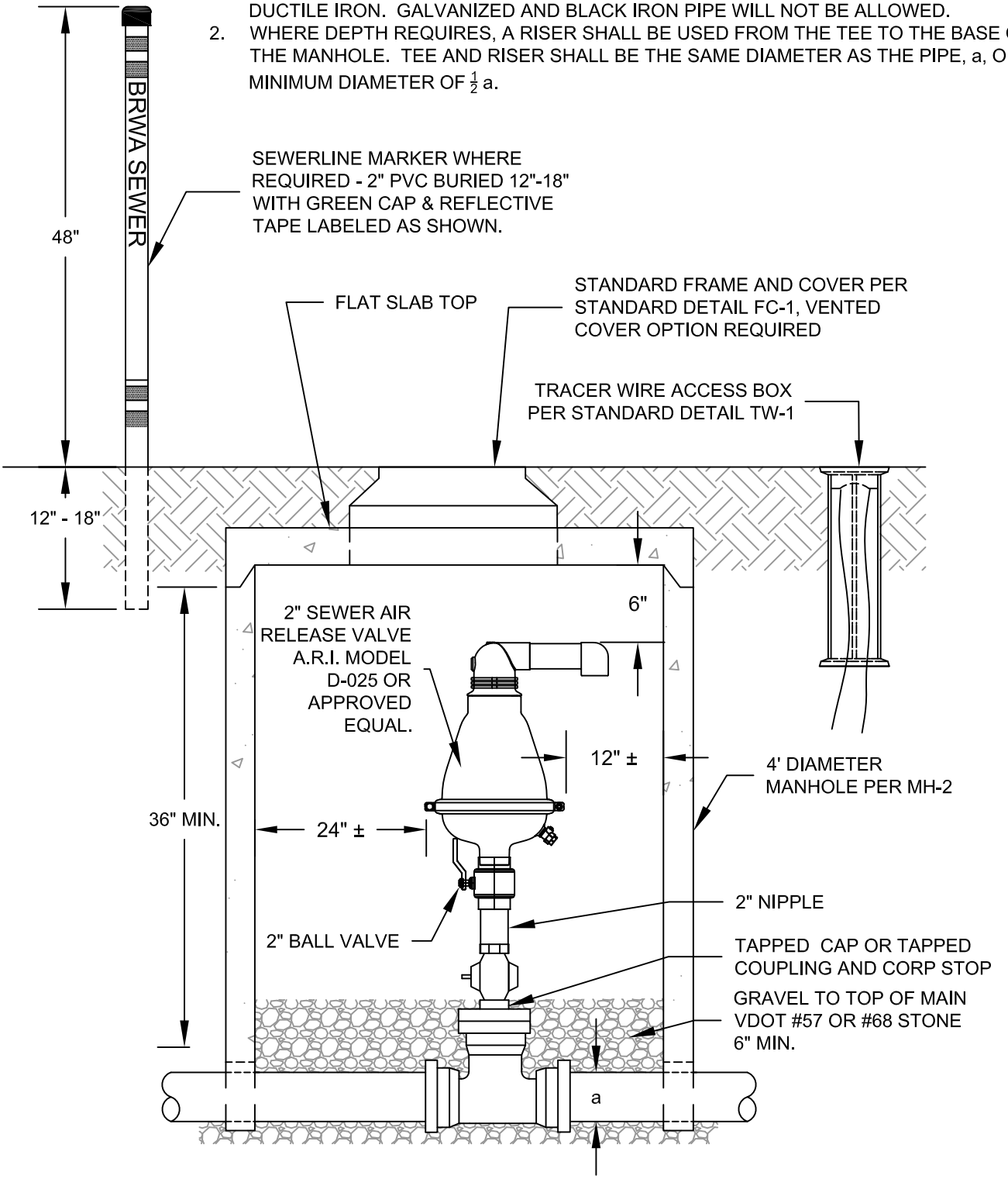

Bedford Regional Water Authority

No.	Date
1	August 20, 2012
2	October 6, 2017
3	
4	

AIR RELEASE VALVE ("ARV") SEWER
(WORKING PRESSURES LESS THEN OR EQUAL TO 100 PSI)

Detail:
AR-3

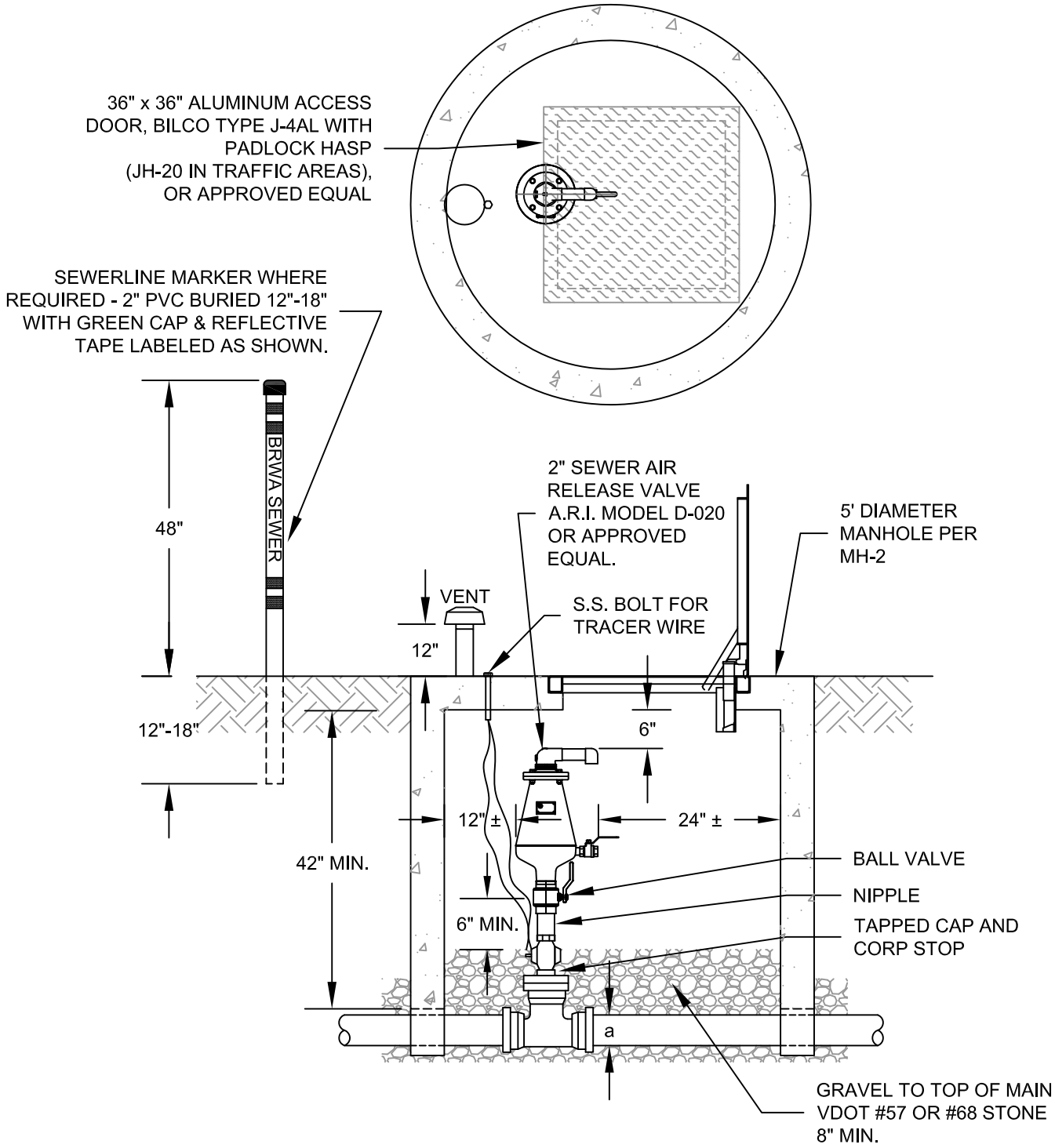

NOTES:

1. ALL PIPE AND FITTINGS SHALL BE STAINLESS STEEL OR EPOXY COATED DUCTILE IRON. GALVANIZED AND BLACK IRON PIPE WILL NOT BE ALLOWED

2. WHERE DEPTH REQUIRES, A RISER SHALL BE USED FROM THE TEE TO THE BASE OF THE MANHOLE. TEE AND RISER SHALL BE THE SAME DIAMETER AS THE PIPE, a, OR A MINIMUM DIAMETER OF $\frac{1}{2}$ a.

Bedford Regional Water Authority

No.	Date
1	August 20, 2012
2	October 6, 2017
3	
4	

AIR RELEASE VALVE ("ARV") - SEWER
(WORKING PRESSURES > 100 PSI

Detail:

AR-4

NOTES:

1. IN PAVEMENT, USE PRECAST CONCRETE CHAMBER.
2. FOR END OF LINE BLOW-OFF, SEE STANDARD DETAIL CA-5 AND CA-6.
3. ALL PIPE AND FITTINGS SHALL BE LEAD FREE BRASS, STAINLESS STEEL, OR EPOXY COATED DUCTILE IRON. GALVANIZED AND BLACK IRON PIPE WILL NOT BE ALLOWED.

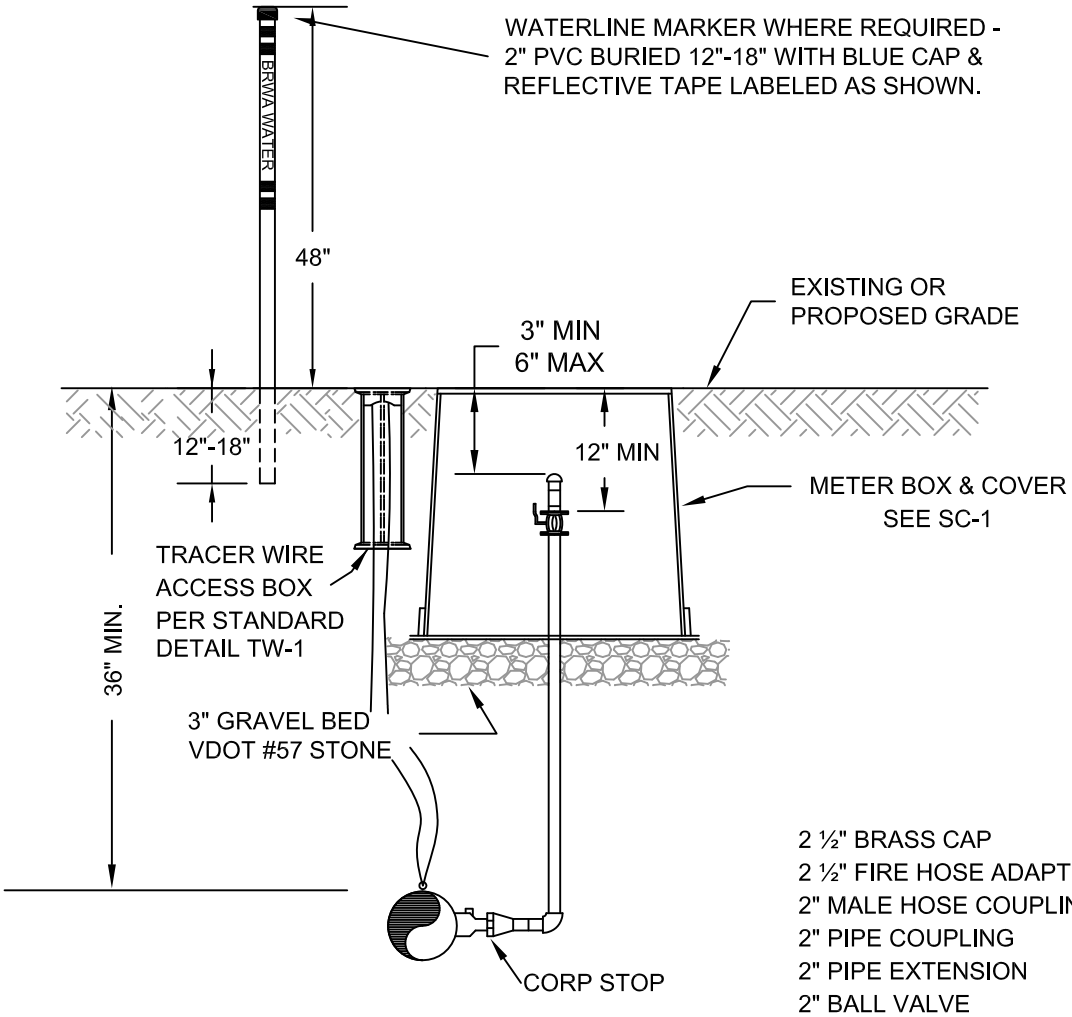

2 ½" BRASS CAP
2 ½" FIRE HOSE ADAPTOR
2" MALE HOSE COUPLING
2" PIPE COUPLING
2" PIPE EXTENSION
2" BALL VALVE
2" NIPPLE
2" 90° BEND
2" NIPPLE
2" TAPPING SLEEVE/SADDLE TAP OR TAPPED TEE

Bedford Regional Water Authority

No.	Date
1	August 20, 2012
2	October 6, 2017
3	
4	

BLOW-OFF CHAMBER

Detail: **BC-1**

NOTES:

1. A PRESSURE REDUCING VALVE SHALL BE INSTALLED PER STANDARD DETAIL RV-2 BETWEEN THE METER AND AUTOMATIC BLOW-OFF VALVE WHEN PRESSURE AT THE BLOWOFF MAY EXCEED 125 PSI.

2. AUTOMATIC BLOW OFF VALVE SHALL BE HYDRO-GUARD MODEL HG-2 OR HG-5, SIGNATURE SERIES, WITH CONTROL VALVE, SAMPLING PORT AND PORTABLE SAMPLE VALVE, INTEGRATED PROGRAMMER, AND SELF-ACTUATING THERMAL CONTROL VALVE.

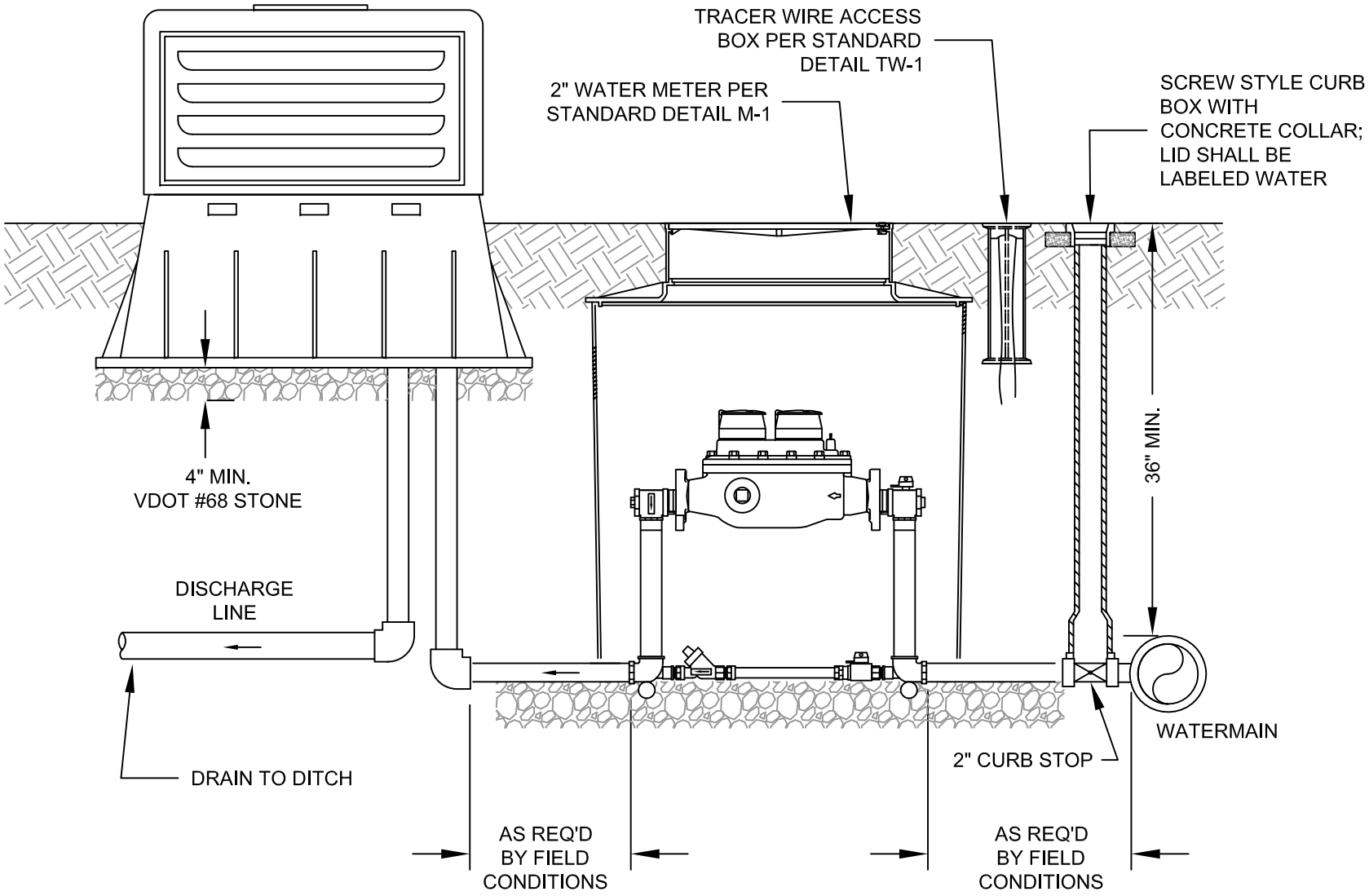

Bedford Regional Water Authority

No.	Date
1	August 20, 2012
2	October 6, 2017
3	
4	

AUTOMATIC BLOW-OFF VALVE
DIRECT DISCHARGE UNIT

Detail: **BC-2**

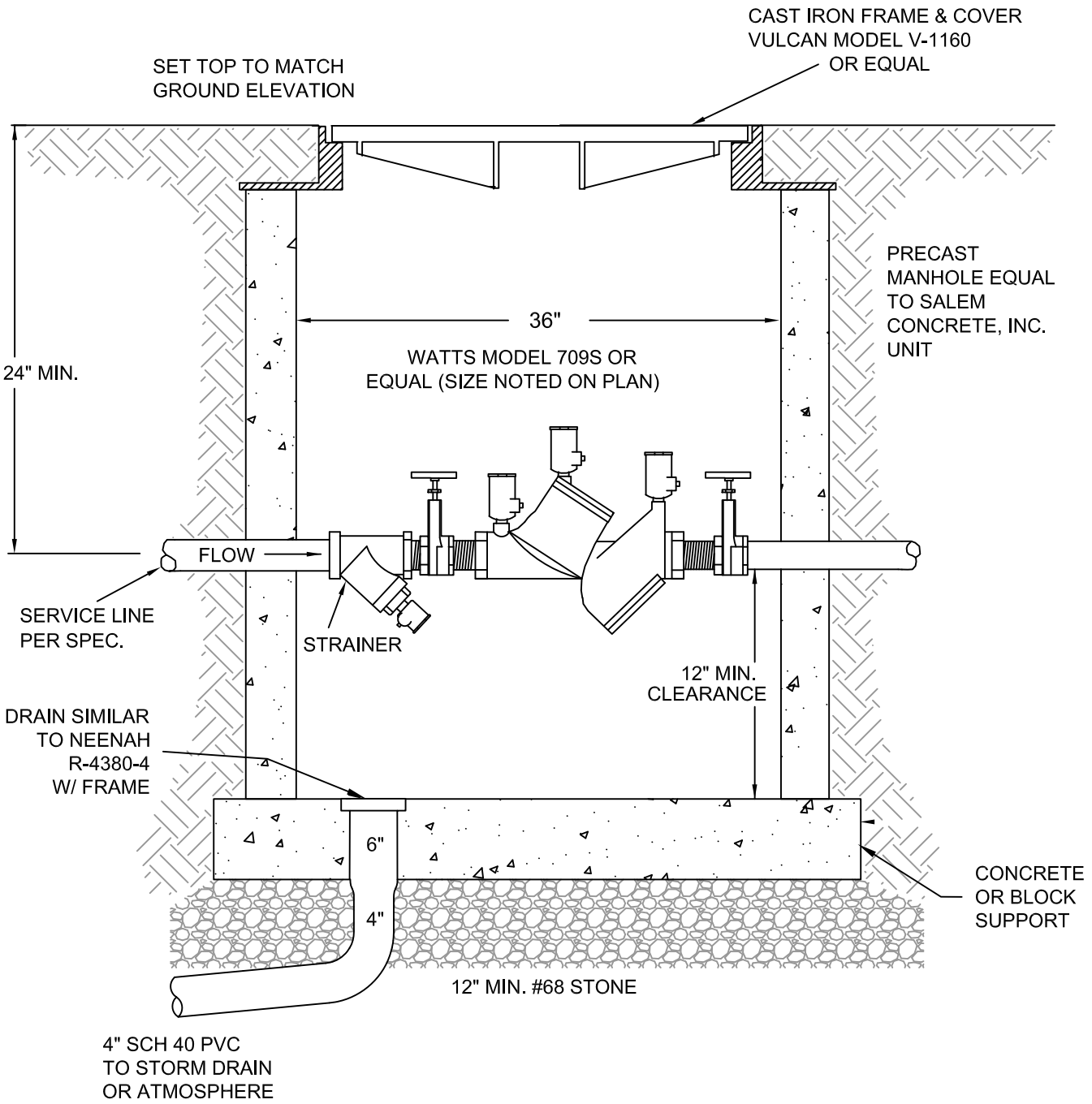

Bedford Regional Water Authority

No.	Date
1	August 20, 2012
2	October 6, 2017
3	
4	

BACKFLOW PREVENTER
DOUBLE CHECK VALVE ASSEMBLY -3/4" TO 2"
(PRIVATE OR PUBLIC)

Detail:

BP-1

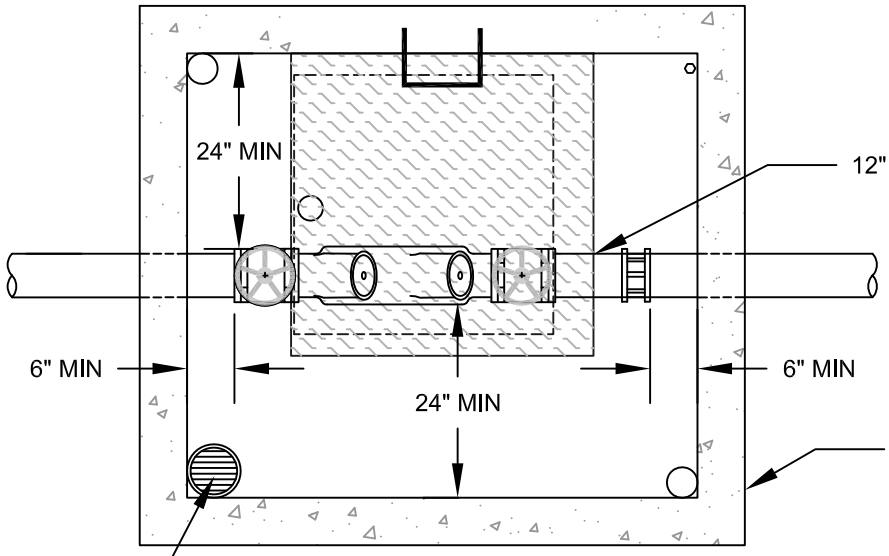

PLAN

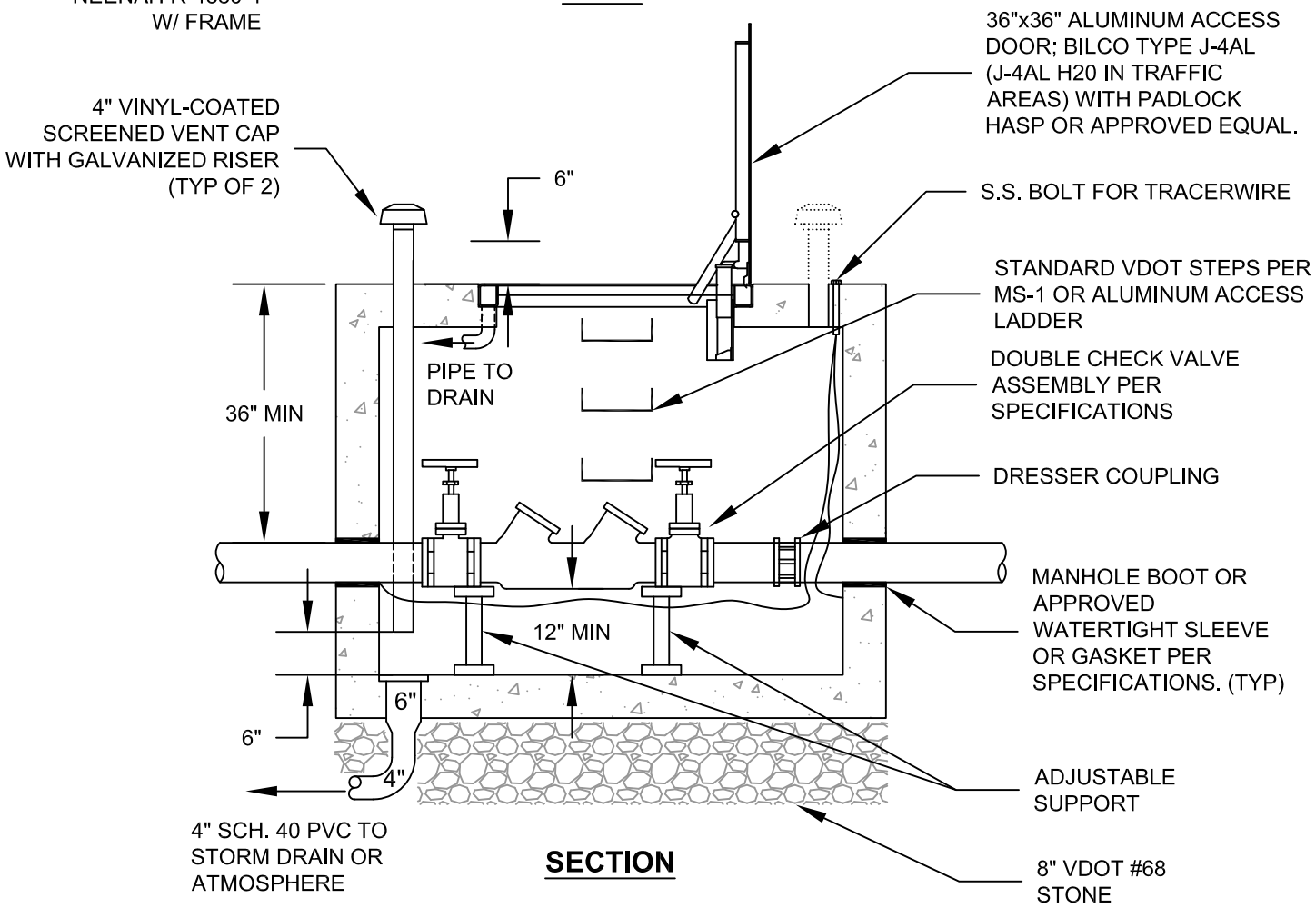

SECTION

Bedford Regional Water Authority

No.	Date
1	August 20, 2012
2	October 6, 2017
3	
4	

BACK FLOW PREVENTER
DOUBLE CHECK VALVE -3" TO 8"

Detail:

BP-2

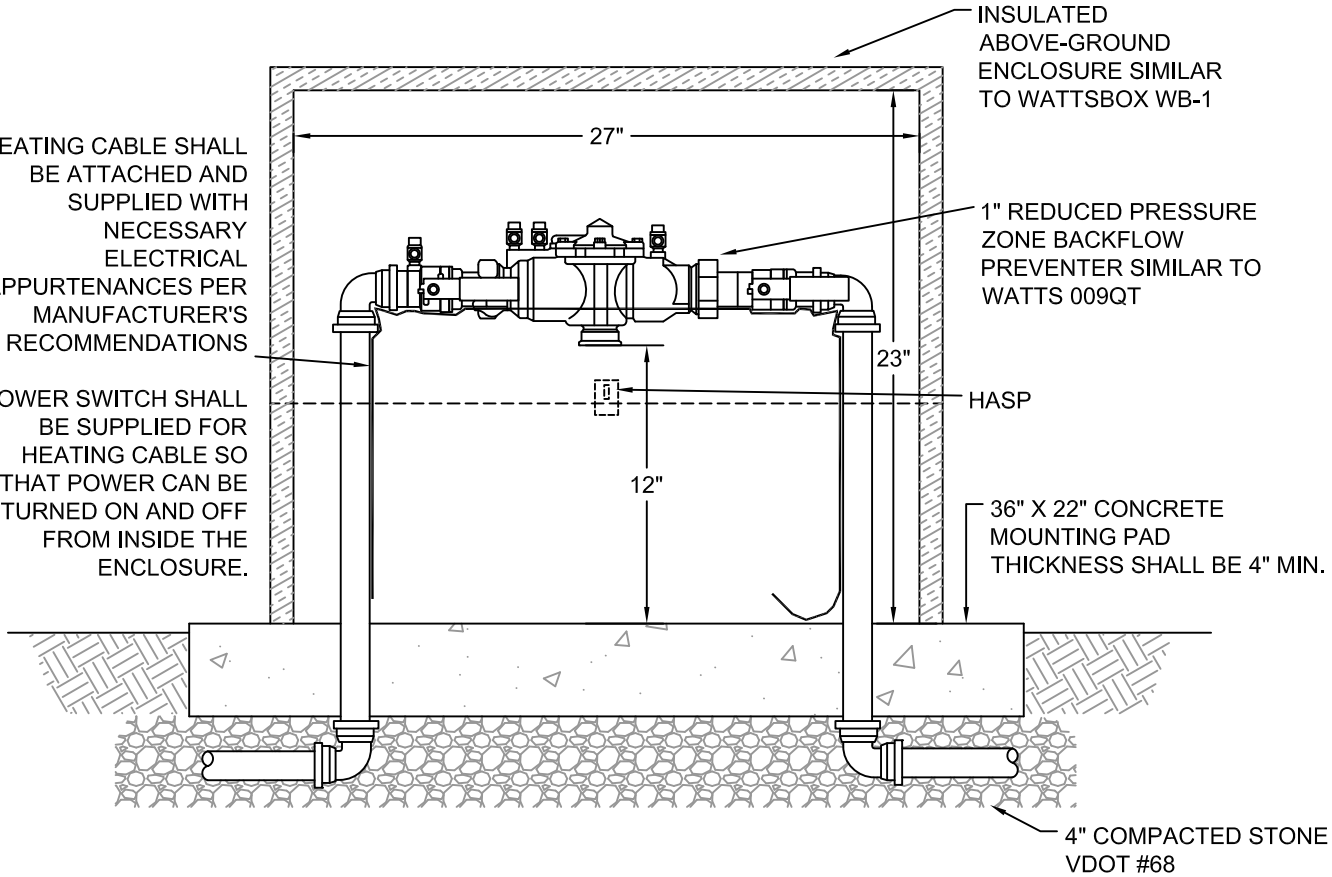

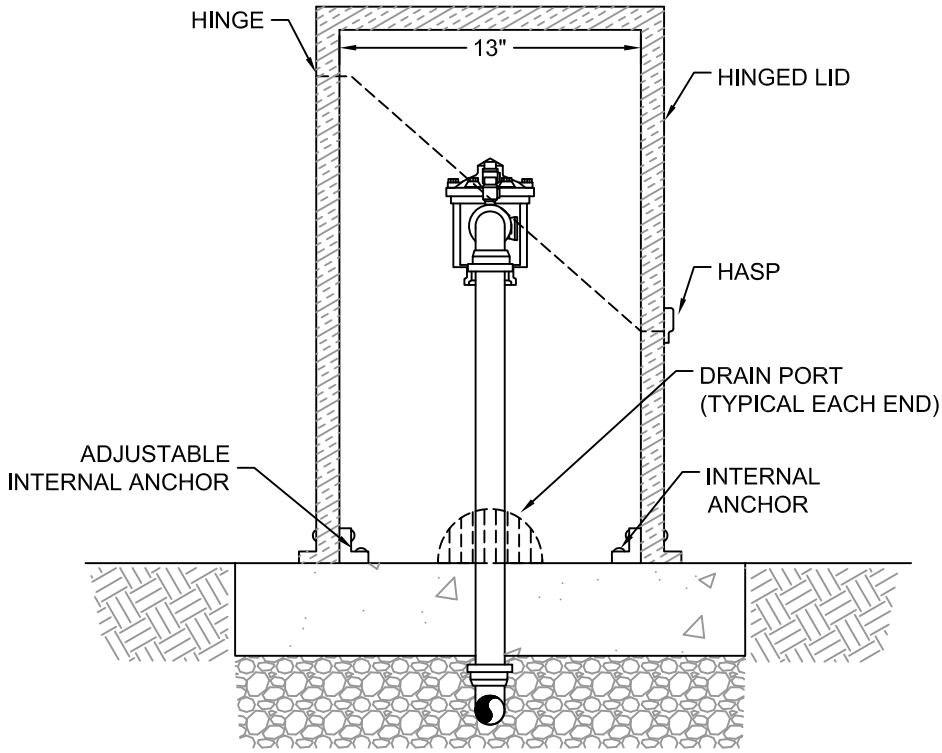

Bedford Regional Water Authority

No.	Date
1	August 20, 2012
2	October 6, 2017
3	
4	

BACKFLOW PREVENTER
REDUCED PRESSURE ZONE ASSEMBLY ("RPZ")
FOR LAWN IRRIGATION SYSTEMS
(PRIVATELY MAINTAINED)

Detail:

BP-3

USE TWO LAYERS
OF 15 LB. BUILDER'S
FELT ON FITTINGS

DIRECTION OF
THRUST OR
BISECTOR OF
PIPE BEND

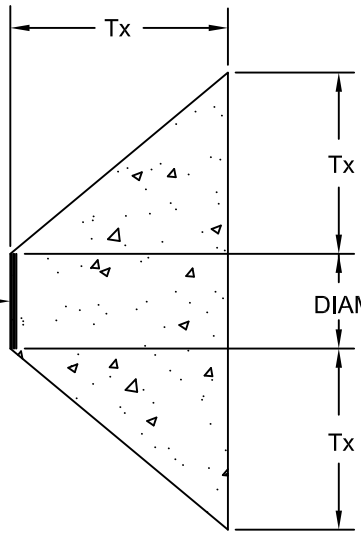

NOTES:

1. FITTING FLANGE BOLTS SHALL REMAIN FREE OF CONCRETE.

2. DO NOT BACKFILL UNTIL CONCRETE HAS SET FOR A MINIMUM OF 4 HOURS.

PLAN

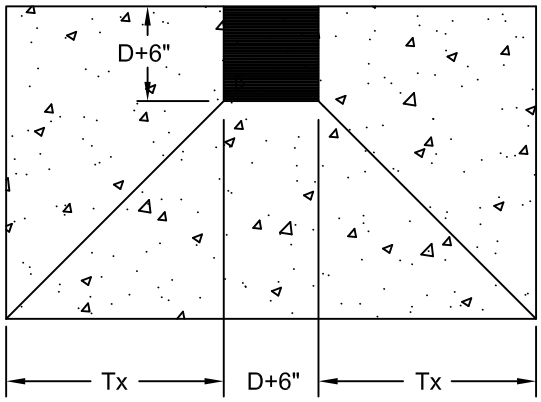

FRONT

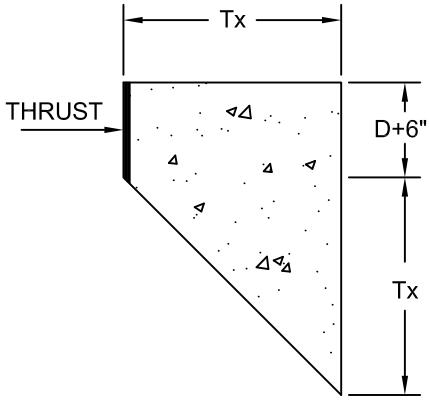

SIDE

PIPE DIA. (Inches)	DEAD END	90° BEND	45° BEND	22 ½° BEND	11 ¼° BEND	THRUST (lbs.)
6	7479 9348 0.75',1.00'	10,576 13,220 1.00',1.25'	5724 7155 0.50',0.75'	2918 3647 0.25',0.25'	1466 1833 0.25',0.25'	200psi 250psi Tx@200,Tx@250
8	12,865 16,082 1.00',1.25'	18,194 22,743 1.50',1.75'	9847 12,308 0.75',1.00'	5020 6275 0.50',0.50'	2522 3153 0.25',0.25'	200psi 250psi Tx@200,Tx@250
10	19,354 24,192 1.25',1.50'	27,370 34,213 1.75',2.00'	14,813 18,516 1.00',1.25'	7551 9439 0.50',0.75'	3794 4743 0.25',0.25'	200psi 250psi Tx@200,Tx@250
12	27,370 34,212 1.75',2.00'	38,706 48,383 2.25',2.50'	20,948 26,185 1.25',1.50'	10,679 13,349 0.75',0.75'	5365 6707 0.25',0.25'	200psi 250psi Tx@200,Tx@250

Bedford Regional Water Authority

No.	Date
1	August 20, 2012
2	October 6, 2017
3	
4	

CONCRETE ANCHOR
FOR HORIZONTAL AND SAG ANCHORS

Detail:

CA-1

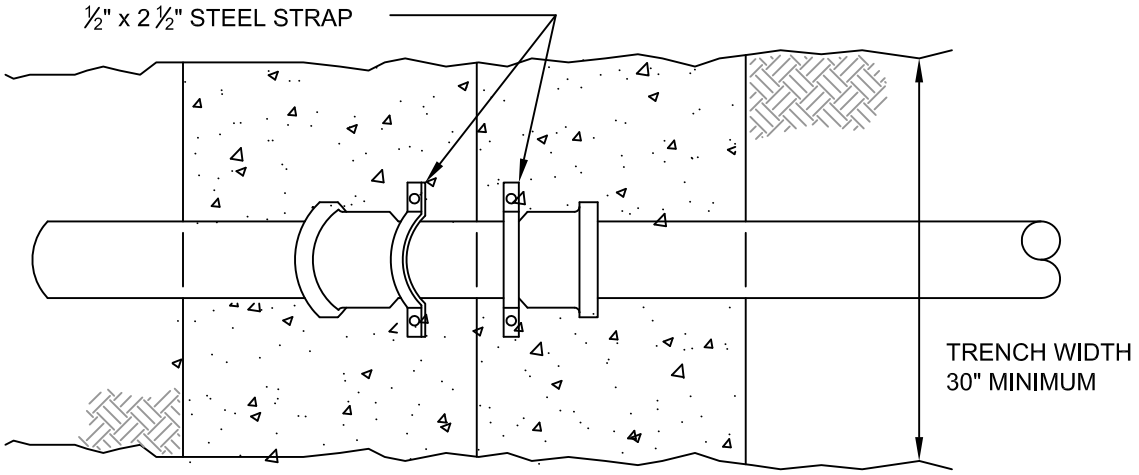

NOTES:

1. FITTING FLANGE BOLTS SHALL REMAIN FREE OF CONCRETE
2. DO NOT BACKFILL UNTIL CONCRETE HAS SET FOR A MINIMUM OF 4 HOURS

PLAN

ANCHOR BOLT SIZE			
b	dia.	a	c
0 to 1'-0"	⅝"	8"	3 ¾"
1'-1" to 2'-6"	⅝"	12"	3 ¾"
2'-7" to 3'-0"	¾"	12"	4 ½"
3'-1" to 3'-5"	⅞"	12"	5 ¼"

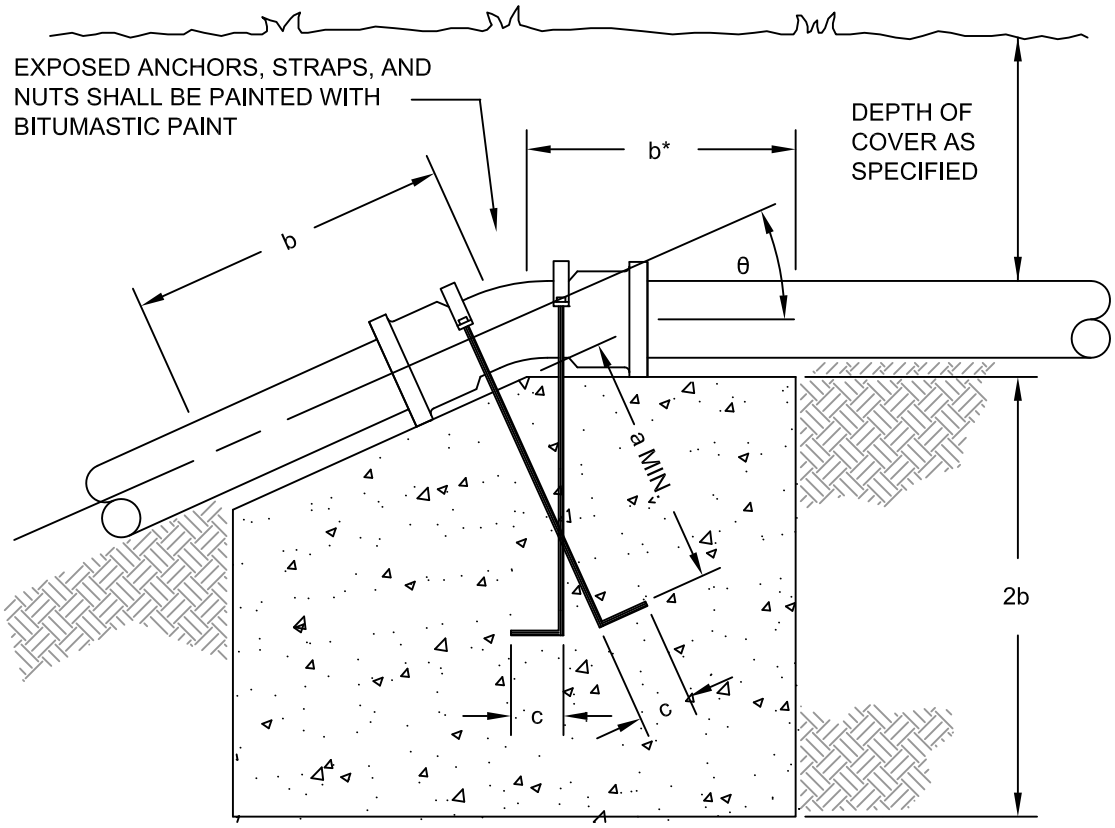

PROFILE

* USE "b" VALUES AS SHOWN ON PLAN

REDUCE "b" DIMENSION IN SOLID ROCK AS APPROVED BY ENGINEER.

Bedford Regional Water Authority

No.	Date
1	August 20, 2012
2	October 6, 2017
3	
4	

CONCRETE ANCHOR
FOR CREST ANCHORS

Detail:

CA-2

NOTES:

1. FOR PIPE LARGER THAN 12", ANCHOR BLOCK SHALL BE OF SPECIAL DESIGN.
2. OTHER PIPE SLOPE ANCHOR SYSTEMS WILL BE CONSIDERED FOR APPROVAL UPON REQUEST TO ENGINEER.

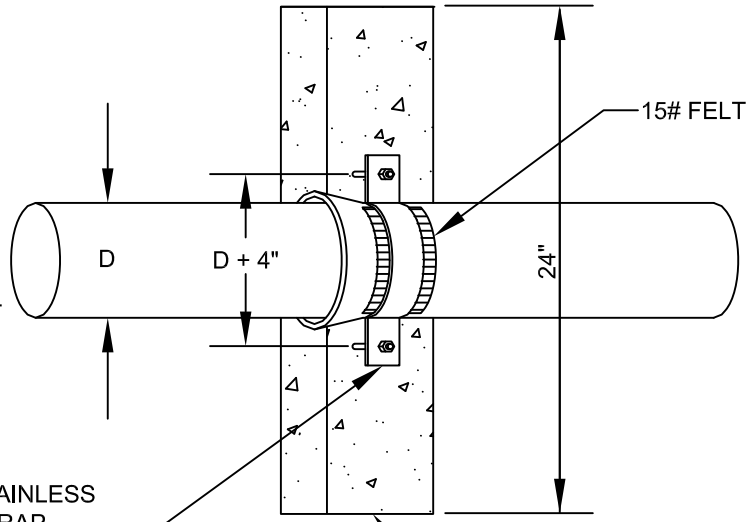

PLAN

CONCRETE ANCHOR (MAY BE PRECAST) CLASS A3 OR C1

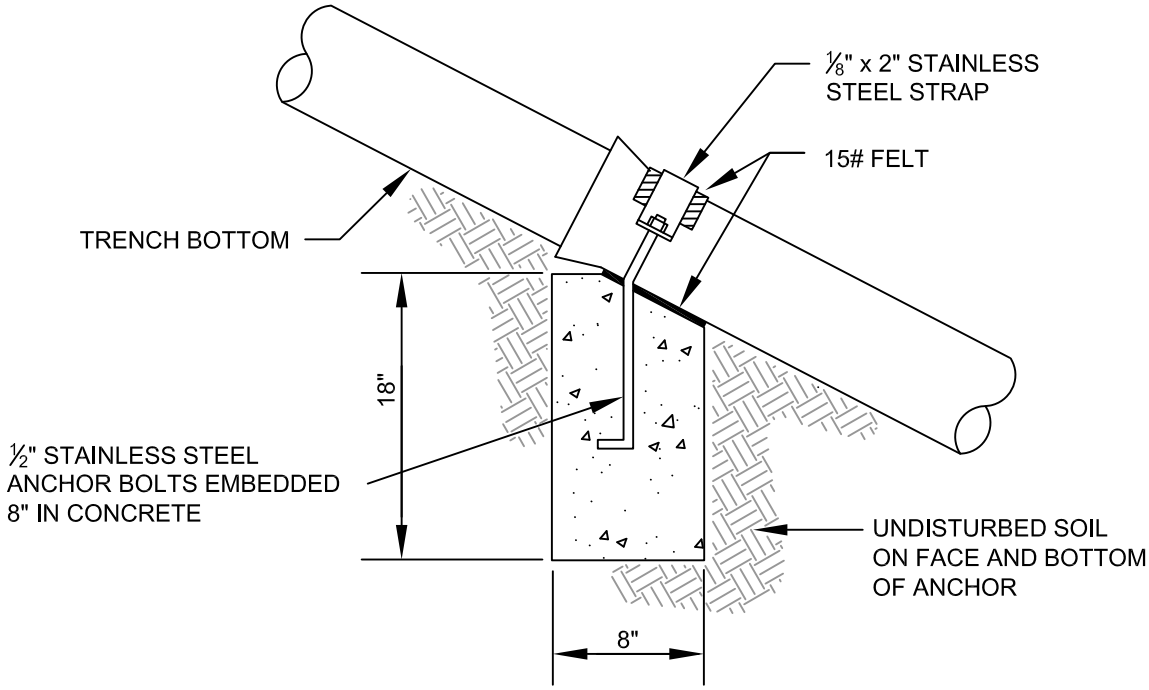

ELEVATION

SPACING FOR ANCHOR BLOCK FOR ALL SIZES

SLOPE %	MINIMUM SPACING (FT)
0 - 19.99	NO ANCHOR REQUIRED
20 - 34.99	35
35 - 50.99	25
51 - MORE	15' OR SPECIAL DESIGN

Bedford Regional Water Authority

No.	Date
1	August 20, 2012
2	October 6, 2017
3	
4	

CONCRETE ANCHOR FOR SLOPES OVER 20%

Detail: CA-3

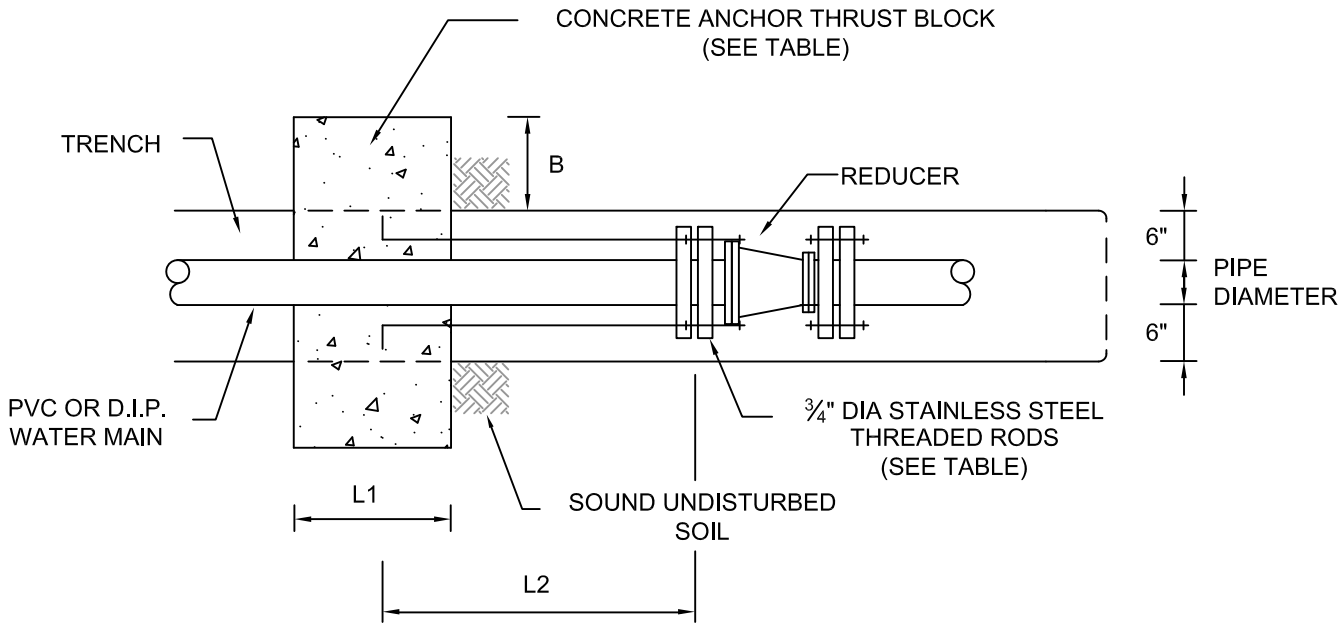

PLAN VIEW

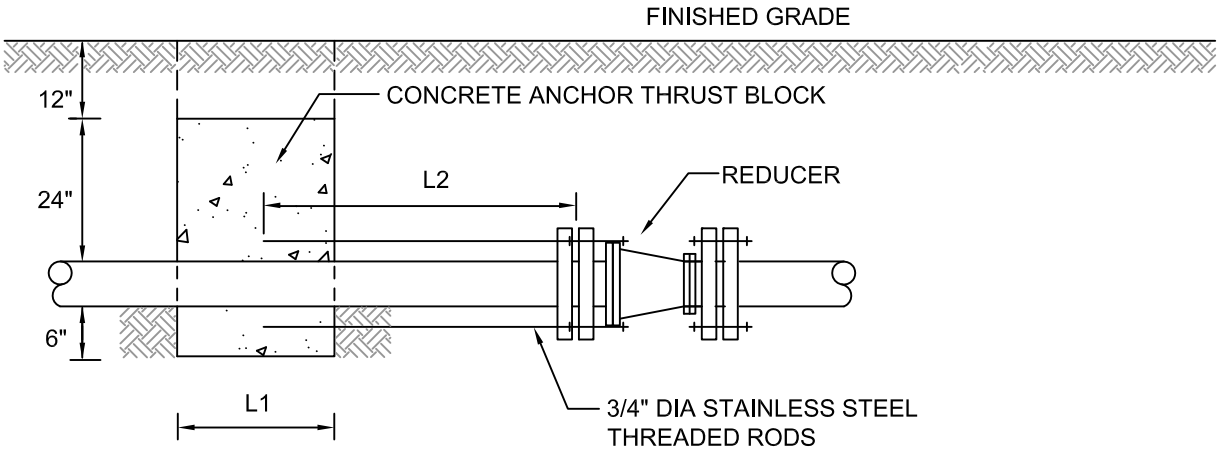

SECTION VIEW

PIPE DIAMETER (in)	B min (in)	L1 min (in)	NUMBER OF RODS PER RETAINER	L2 min (in)
4-8	12	18	4	27
10-12	27	33	4	50
14-16	44	50	6	75

NOTES:

1. FOR USE WITH TEST OR WORKING PRESSURES 200 PSI OR LESS.
2. RETAINER GLANDS SHALL BE IN ACCORDANCE WITH SPECIFICATIONS.
3. USE BULKHEAD ANCHORS AT ALL REDUCERS.

Bedford Regional Water Authority

No.	Date
1	August 20, 2012
2	October 6, 2017
3	
4	

WATERLINE BULKHEAD ANCHOR

Detail: CA-4

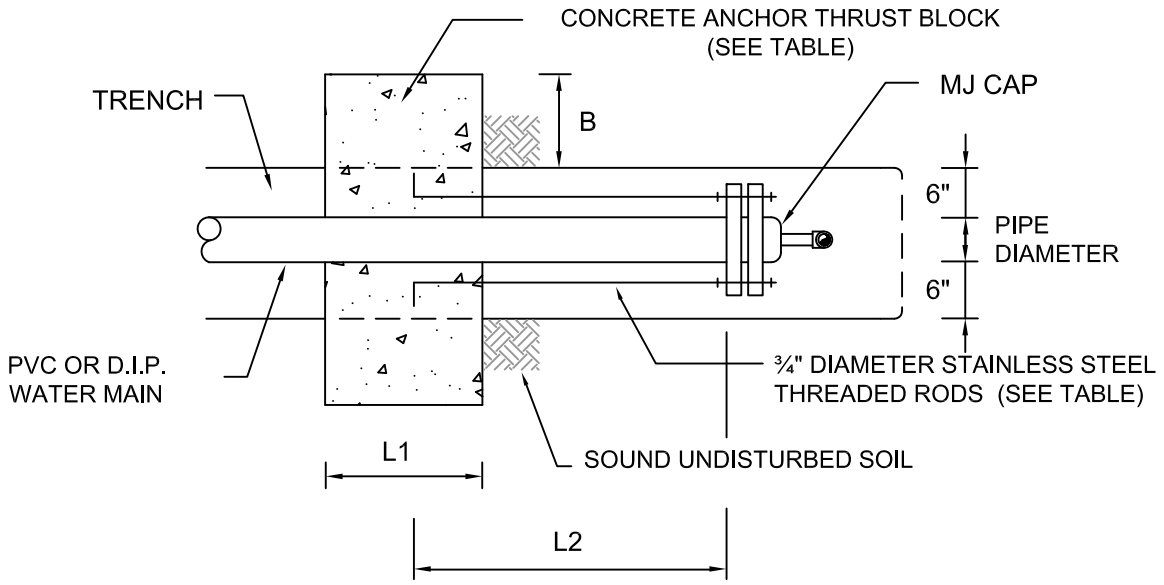

PLAN VIEW

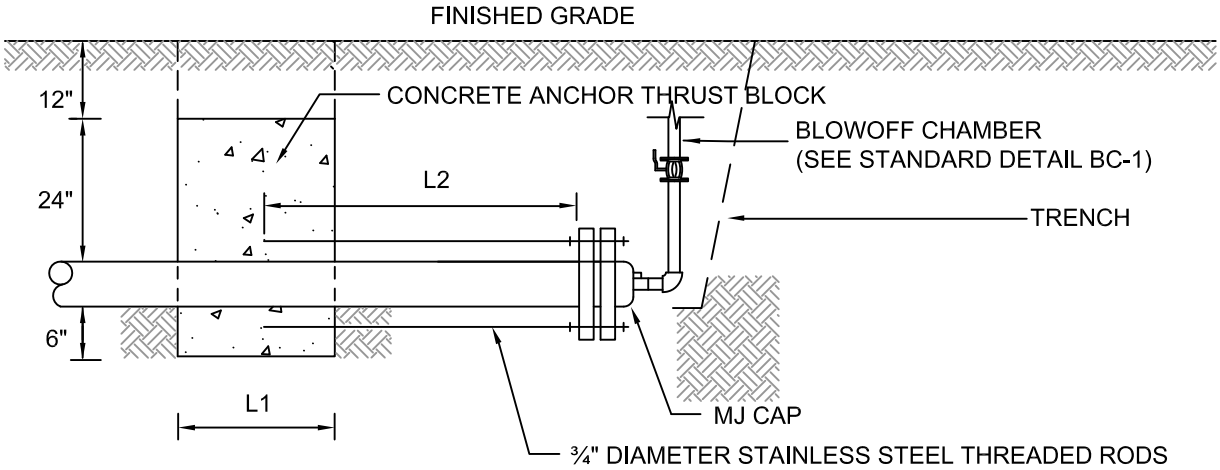

SECTION VIEW

PIPE DIAMETER (in)	B min (in)	L1 min (in)	NUMBER OF RODS PER RETAINER	L2 min (in)
4-8	12	18	4	27
10-12	27	33	4	50
14-16	44	50	6	75

NOTES:

1. FOR USE WITH TEST OR WORKING PRESSURES 200 PSI OR LESS.
2. RETAINER GLANDS SHALL BE IN ACCORDANCE WITH SPECIFICATIONS.

Bedford Regional Water Authority

No.	Date
1	August 20, 2012
2	October 6, 2017
3	
4	

WATERLINE BULKHEAD ANCHOR
WITH BLOW-OFF

Detail:

CA-5

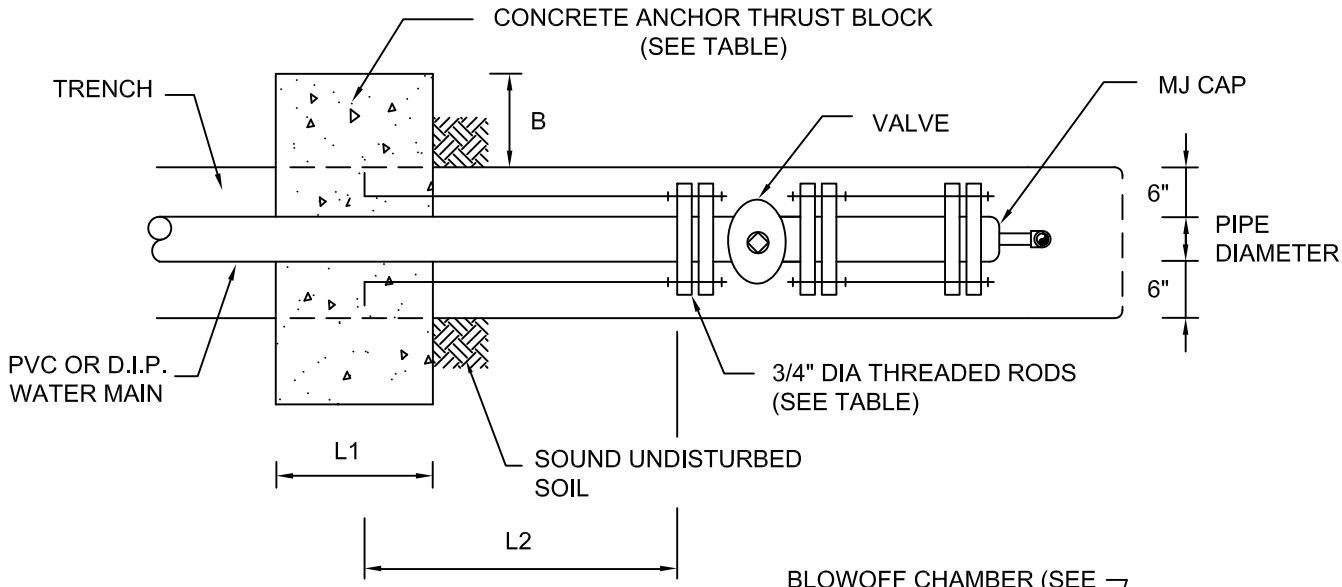

PLAN VIEW

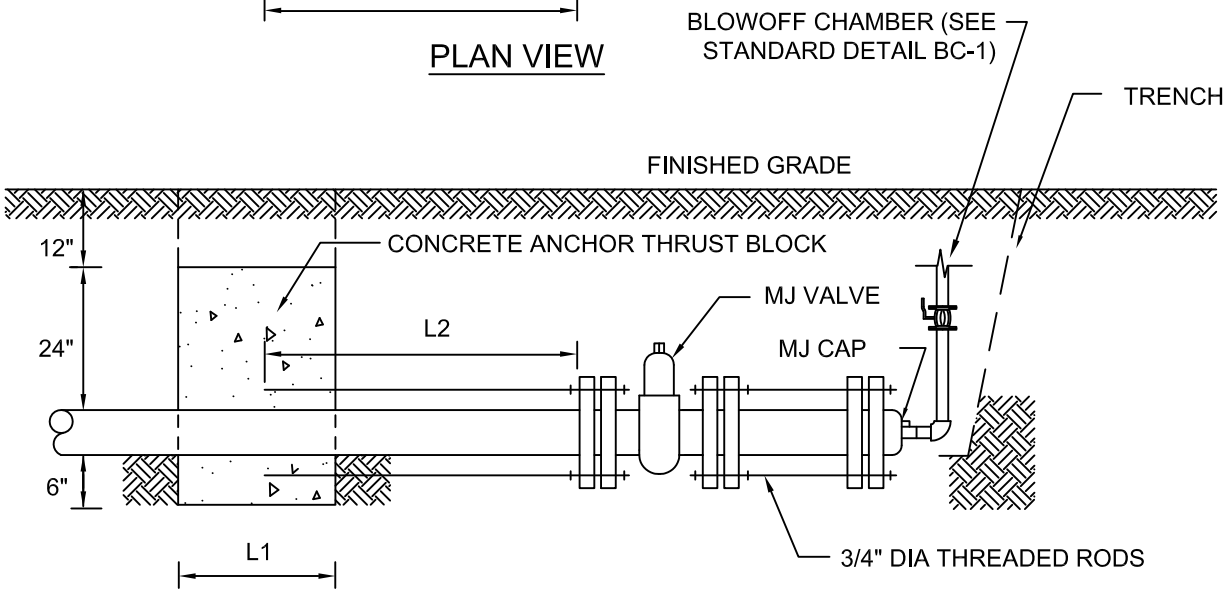

SECTION VIEW

PIPE DIAMETER (in)	B min (in)	L1 min (in)	NUMBER OF RODS PER RETAINER	L2 min (in)
4-8	12	18	4	27
10-12	27	33	4	50
14-16	44	50	6	75

NOTES:

1. FOR USE WITH TEST OR WORKING PRESSURES 200 PSI OR LESS.
2. RETAINER GLANDS SHALL BE IN ACCORDANCE WITH SPECIFICATIONS.

Bedford Regional Water Authority

No.	Date
1	August 20, 2012
2	October 6, 2017
3	
4	

WATERLINE BULKHEAD ANCHOR
WITH GATE VALVE AND BLOW-OFF

Detail:

CA-6

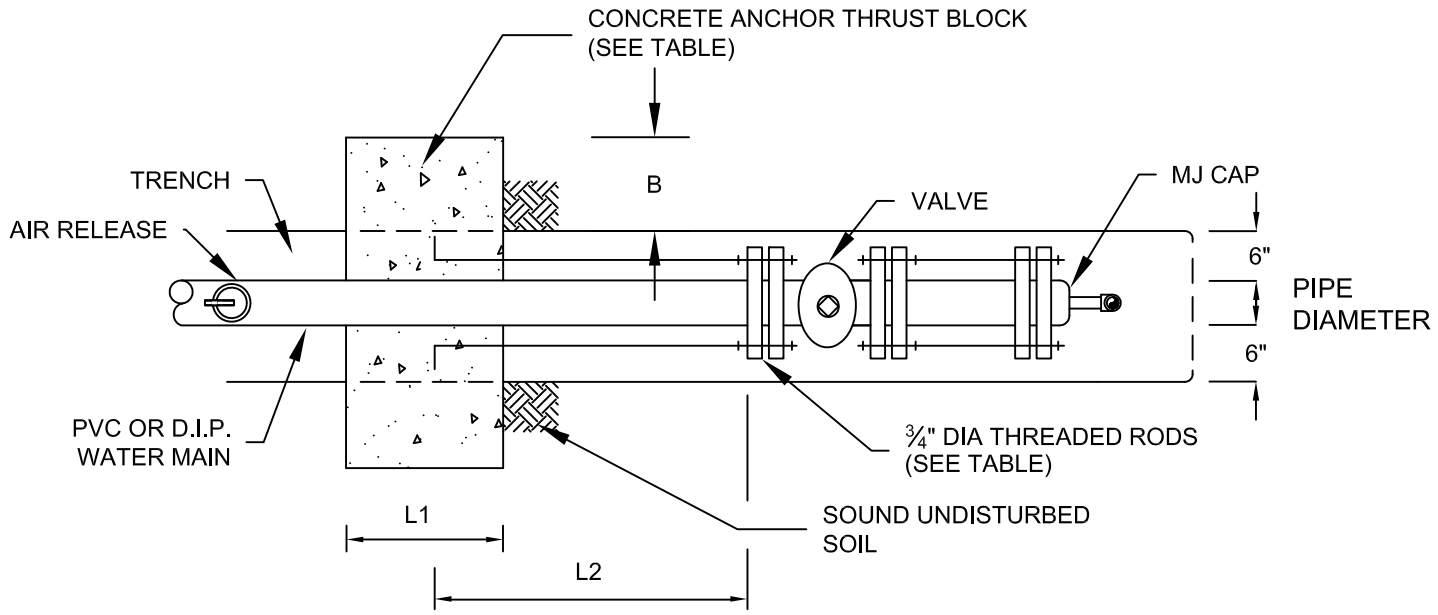

PLAN VIEW

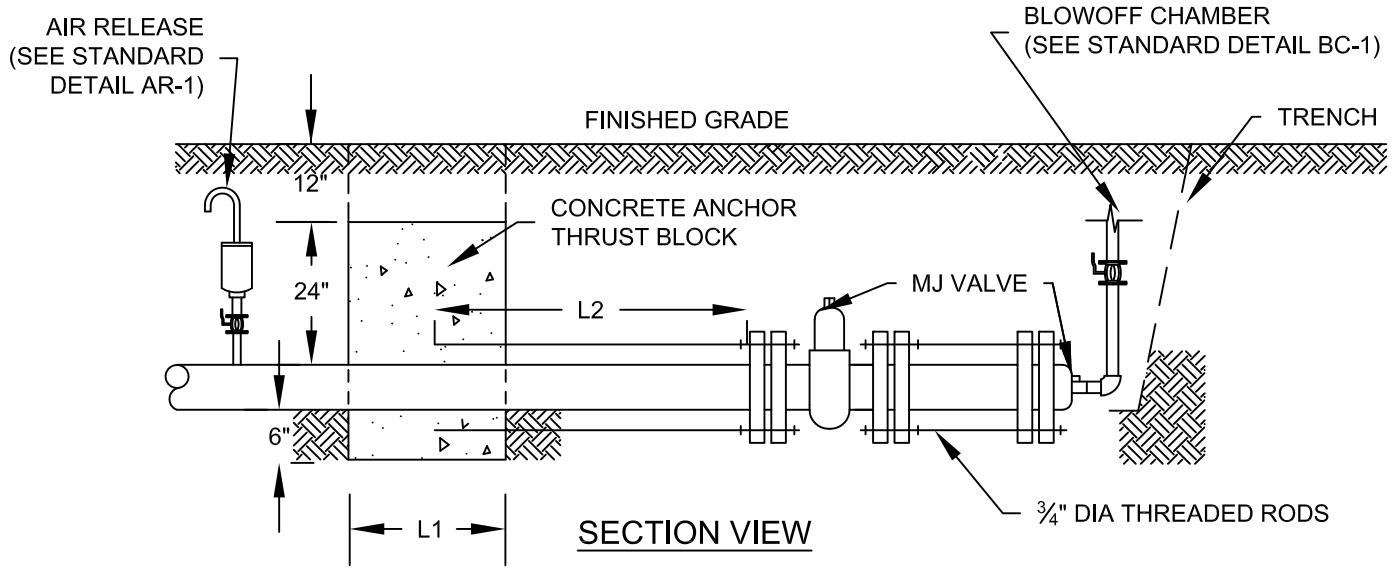

SECTION VIEW

PIPE DIAMETER (in)	B min (in)	L1 min (in)	NUMBER OF RODS PER RETAINER	L2 min (in)
4-8	12	18	4	27
10-12	27	33	4	50
14-16	44	50	6	75

NOTES:

1. FOR USE WITH TEST OR WORKING PRESSURES 200 PSI OR LESS
2. RETAINER GLANDS SHALL BE IN ACCORDANCE WITH SPECIFICATIONS.

Bedford Regional Water Authority

No.	Date
1	August 20, 2012
2	October 6, 2017
3	
4	

WATERLINE AIR RELEASE
BULKHEAD ANCHOR WITH BLOWOFF

Detail: CA-7

TRENCH WIDTH = 2.0' DEPTH OF COVER = 30"

	SIZE	PRESSURE					
θ=45°		50	100	150	200	250	300
"b" AS SHOWN	4"	0.56	0.86	1.09	1.27	1.43	1.58
	6"	0.91	1.34	1.67	1.94	2.17	2.38
	8"	1.24	1.81	2.24	2.59	2.91	3.19
	10"	1.57	2.27	2.81	3.25	3.64	4.00
	12"	1.90	2.74	3.37	3.91	4.38	4.80
θ=22.5°	4"	0.30	0.54	0.70	0.83	0.94	1.04
	6"	0.56	0.88	1.10	1.29	1.45	1.60
	8"	0.80	1.20	1.49	1.74	1.96	2.15
	10"	1.02	1.51	1.88	2.19	2.46	2.69
	12"	1.24	1.83	2.27	2.63	2.96	3.25
θ=11.25°	4"	-	0.30	0.43	0.54	0.61	0.69
	6"	0.30	0.56	0.72	0.86	0.98	1.08
	8"	0.48	0.79	1.00	1.18	1.33	1.47
	10"	0.64	1.01	1.27	1.49	1.68	1.85
	12"	0.79	1.22	1.54	1.80	2.03	2.23

TRENCH WIDTH = 3.0' DEPTH OF COVER = 42"

	SIZE	PRESSURE					
θ=45°		50	100	150	200	250	300
"b" AS SHOWN	4"	0.36	0.65	0.85	1.01	1.15	1.27
	6"	0.70	1.07	1.35	1.58	1.78	1.95
	8"	0.99	1.47	1.83	2.13	2.39	2.63
	10"	1.27	1.86	2.31	2.68	3.01	3.30
	12"	1.55	2.25	2.78	3.23	3.62	3.97
θ=22.5°	4"	0.02	0.37	0.52	0.64	0.74	0.82
	6"	0.39	0.68	0.88	1.04	1.18	1.30
	8"	0.61	0.96	1.21	1.42	1.60	1.76
	10"	0.81	1.23	1.54	1.80	2.02	2.22
	12"	1.00	1.49	1.86	2.17	2.44	2.68
θ=11.25°	4"	-	0.05	0.26	0.36	0.44	0.51
	6"	0.07	0.39	0.55	0.67	0.77	0.86
	8"	0.32	0.60	0.79	0.94	1.08	1.19
	10"	0.47	0.81	1.02	1.21	1.37	1.51
	12"	0.61	0.98	1.25	1.47	1.66	1.83

Bedford Regional Water Authority

No.	Date
1	August 20, 2012
2	October 6, 2017
3	
4	

VALUES OF B (IN FEET)
FOR VERTICAL PIPE ANCHORS

Detail:

CA-B

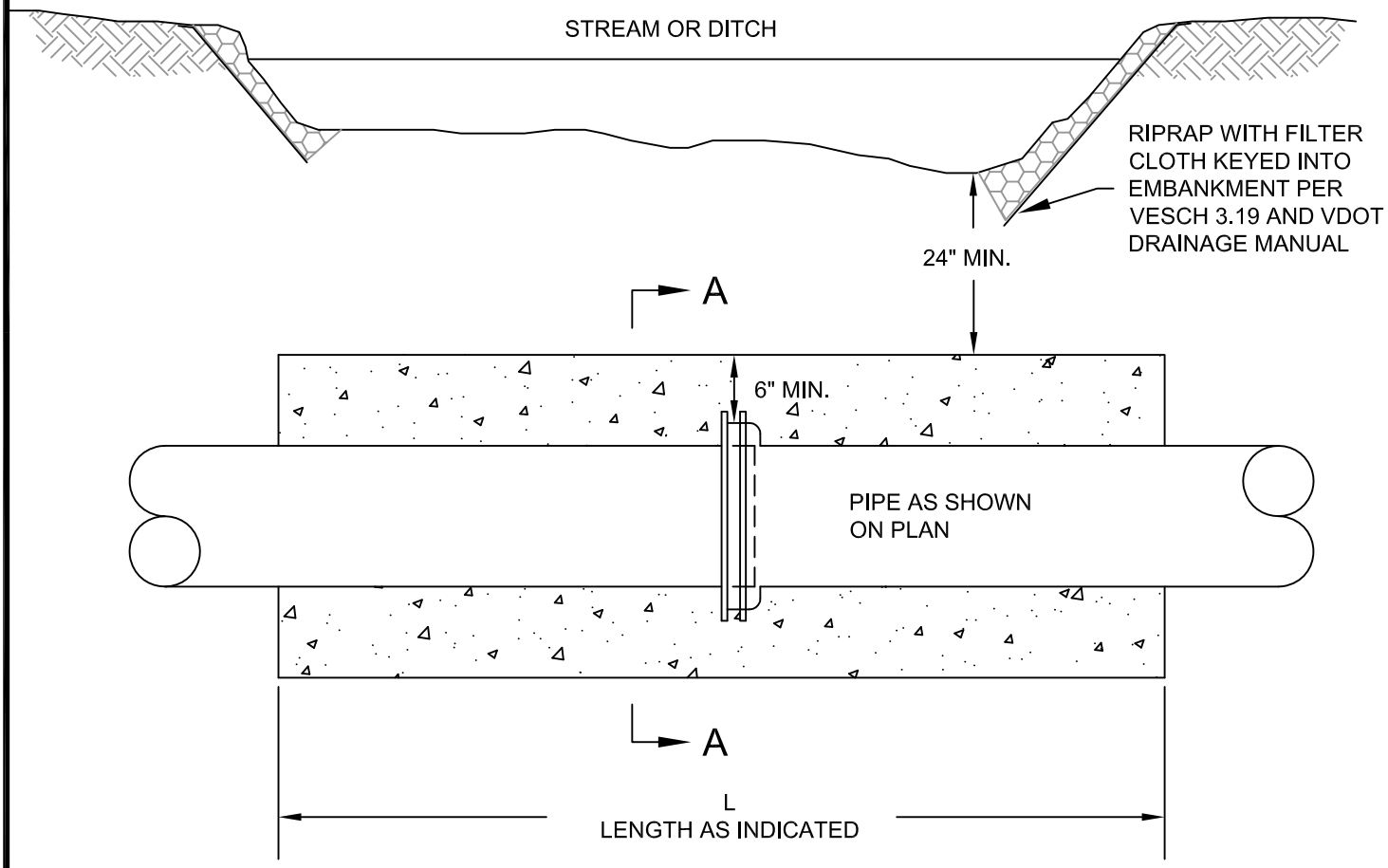

PROFILE

FOR CONCRETE ARCH WHERE CALLED FOR ON PLANS, ELIMINATE CONCRETE BELOW PIPE, EXTEND TO TRENCH WALL AND SET L=18".

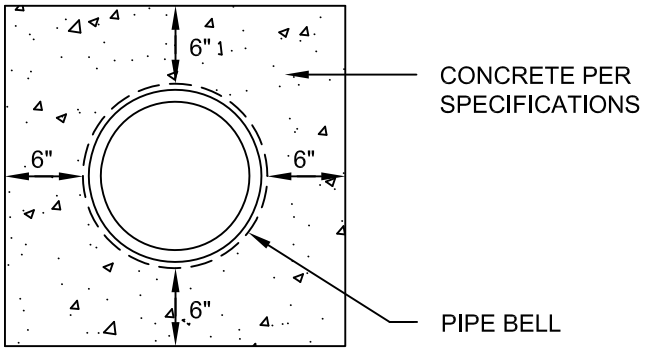

SECTION A-A

Bedford Regional Water Authority

No.	Date
1	August 20, 2012
2	October 6, 2017
3	
4	

CONCRETE ENCASEMENT

Detail: CE-1

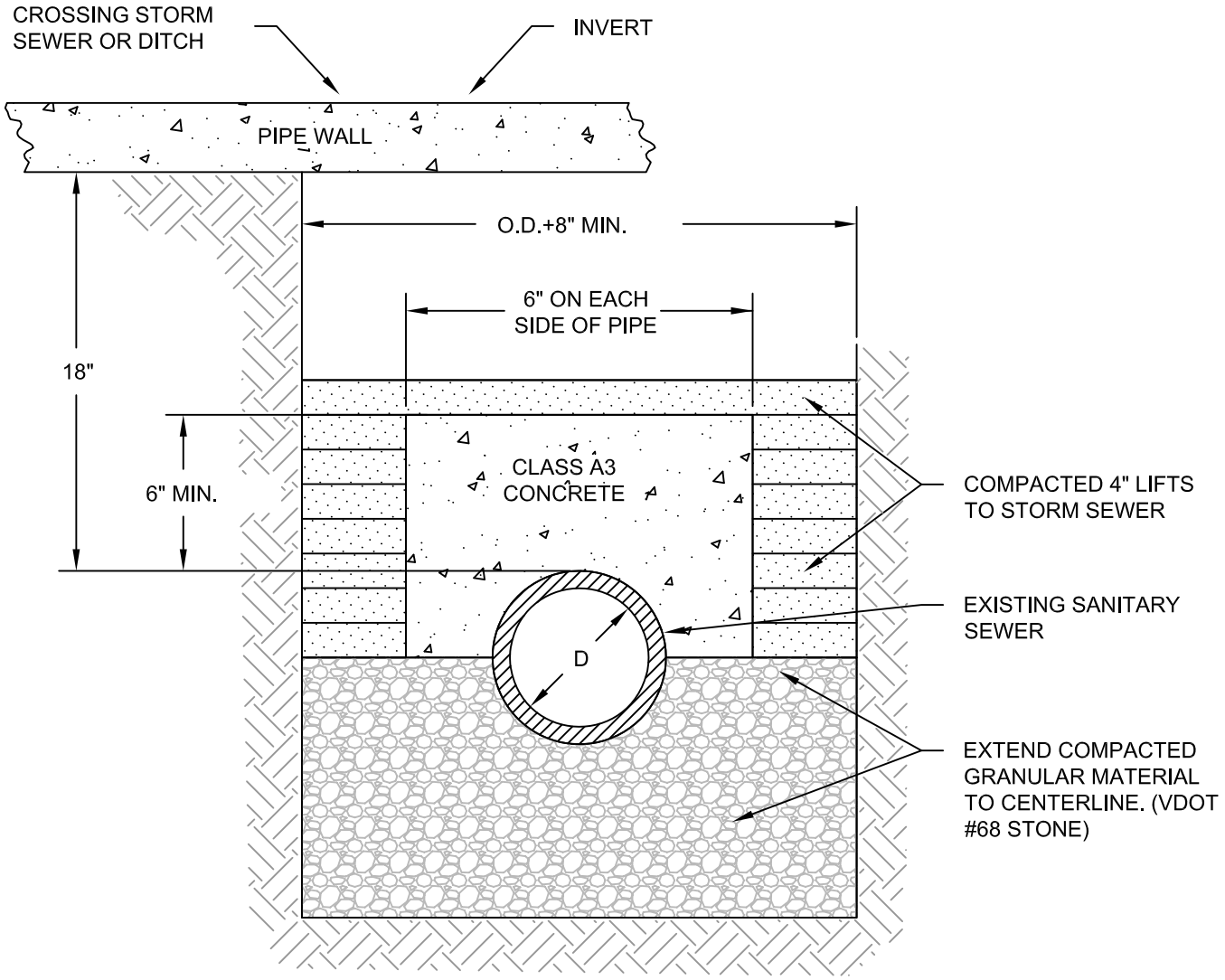

O.D. = OUTSIDE DIAMETER
OF EXISTING PIPE

Bedford Regional Water Authority

No.	Date
1	August 20, 2012
2	October 6, 2017
3	
4	

SANITARY AND STORM SEWER
CROSSING ENCASEMENT

Detail:

CE-2

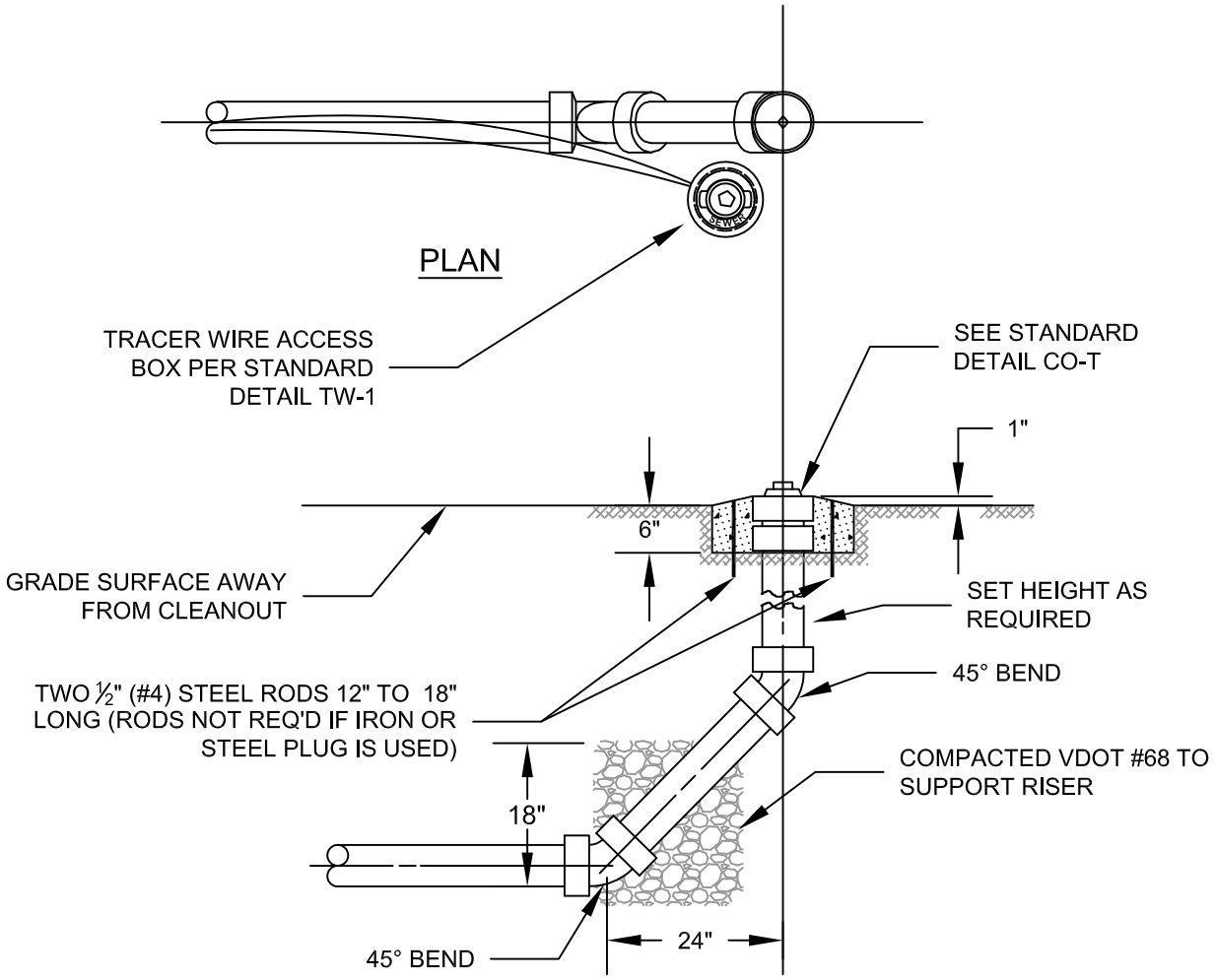

NOTE:

1. TERMINAL CLEANOUTS SHALL BE A MINIMUM OF 6" DIAMETER.

FITTINGS REQUIRED FOR EACH CLEANOUT

	ϕ	WYE	45° BEND	22 ½° BEND	11 ¼° BEND	CLEANOUT ADAPT.
STRAIGHT THRU	0	0	2	0	0	1

Bedford Regional Water Authority

No.	Date
1	August 20, 2012
2	October 6, 2017
3	
4	

SANITARY CLEANOUT
TERMINAL LINE CLEANOUT

Detail:

CO-1

NOTES:

1. TRAFFIC BEARING BOX AND LID REQUIRED IN TRAFFIC AREAS.
2. ALL PIPE AND FITTINGS SHALL BE OF SIMILAR MATERIAL.
3. ALL PIPE SHALL BE OF SAME SIZE.
4. NO BENDS ARE ALLOWED IN THE LATERAL FROM THE MAIN TO THE CLEANOUT STACK WYE (EXCEPT AS NOTED).
5. ALL MAIN LINE TAPS ON ACTIVE MAINS WILL BE PERFORMED BY UTILITY OWNER.
6. PIPING ON PRIVATE SIDE OF CLEANOUT TO BE INSTALLED PER GOVERNING JURISDICTION REQUIREMENTS.
7. MINIMUM LATERAL SIZE SHALL BE 4" FOR RESIDENTIAL, 6" FOR COMMERCIAL.
8. MINIMUM COVER FOR ALL SEWER LATERALS SHALL BE THREE (3') FEET.
9. LOWEST FINISHED FLOOR ELEVATION TO BE SERVICED BY GRAVITY SHALL BE A MINIMUM OF THREE FEET (3') ABOVE THE TOP OF THE MAIN AT THE POINT WHERE THE SERVICE LATERAL CONNECTS TO THE MAIN; IF FINISHED FLOOR ELEVATION FALLS BELOW THE MAIN, PROPERTY OWNER IS RESPONSIBLE FOR ANY NECESSARY FORCE MAIN CONNECTIONS ON THE PRIVATE SIDE OF THE PROVIDED CLEANOUT.
10. WHERE REQUIRED, CHECK VALVES SHALL BE INSTALLED ON THE PRIVATE SIDE OF THE CLEANOUT. CHECK VALVES SHALL BE CLEAN CHECK® EXTENDABLE BACKWATER VALVES AS MANUFACTURED BY RECTORSEAL OR APPROVED EQUAL.

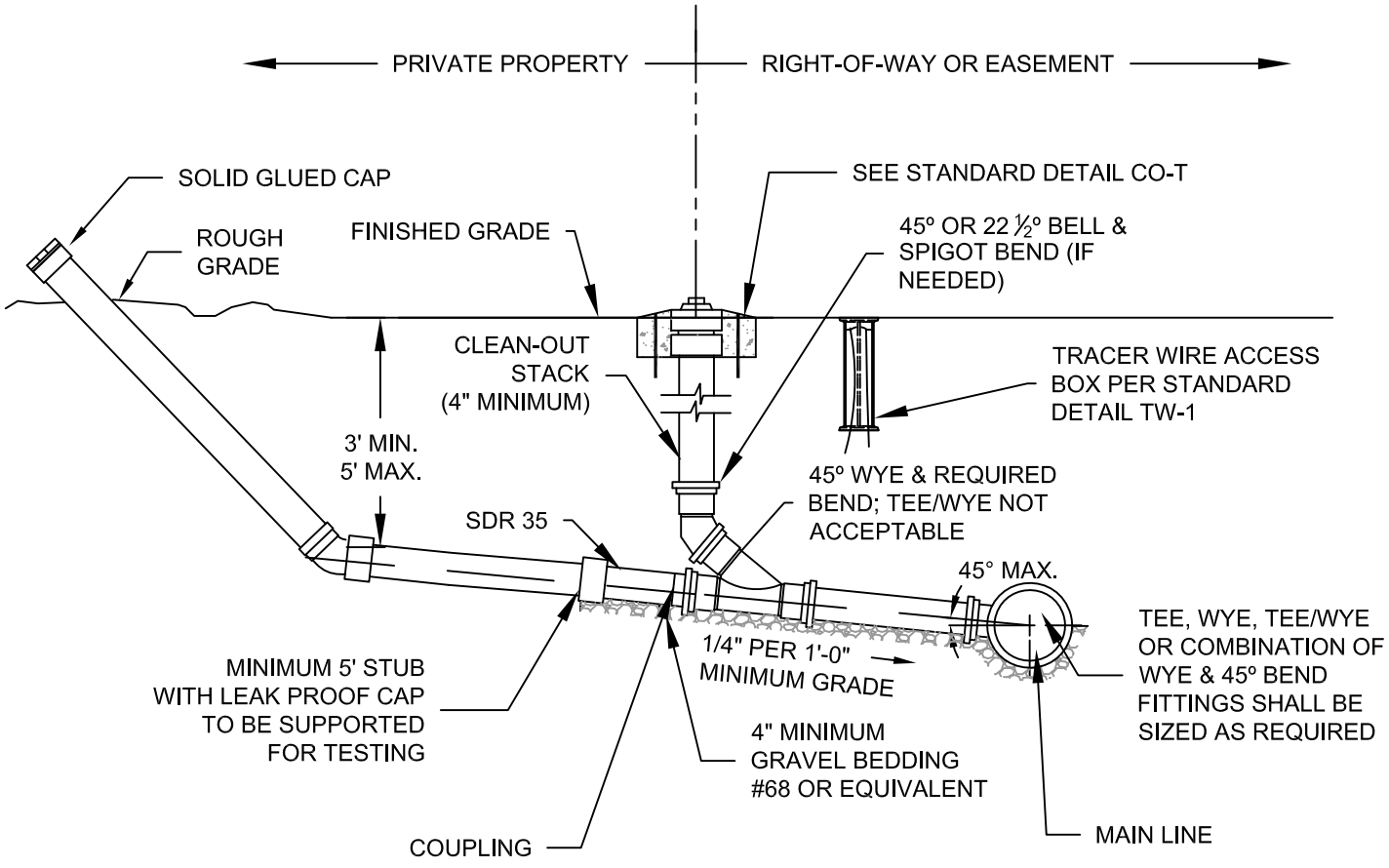

Bedford Regional Water Authority

No.	Date
1	August 20, 2012
2	October 6, 2017
3	
4	

SINGLE SANITARY SEWER CLEANOUT

Detail: **CO-2**

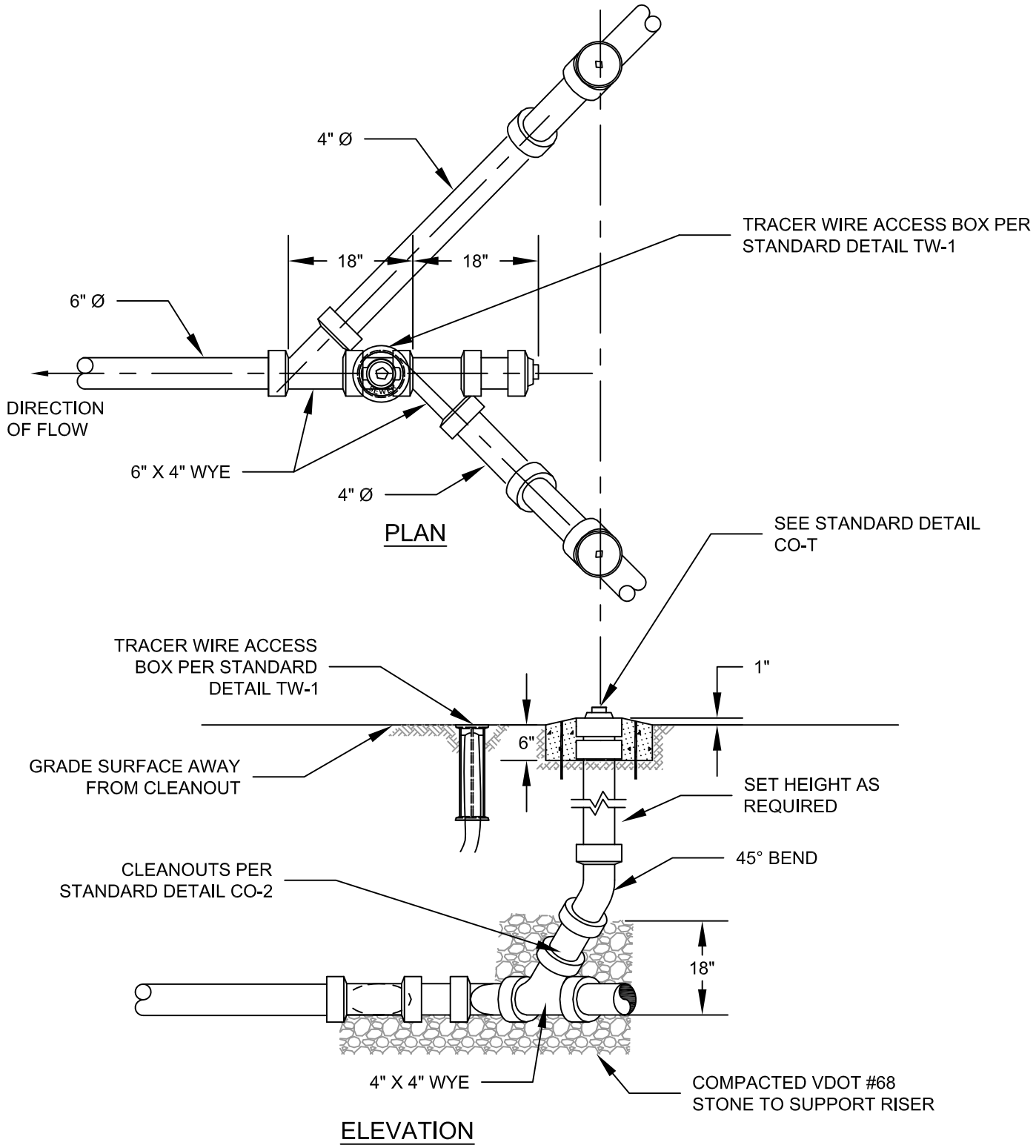

Bedford Regional Water Authority

No.	Date
1	August 20, 2012
2	October 6, 2017
3	
4	

DOUBLE SANITARY SEWER CLEANOUT

Detail: **CO-3**

NOTE FOR STANDARD CLEANOUTS:
IF FINAL GRADE CANNOT BE ESTABLISHED AT TIME OF CONSTRUCTION, CONCRETE PAD SHALL BE INSTALLED WITHIN 6" OF GROUND SURFACE WITH CLEANOUT COVER REMAINING ABOVE GRADE. CLEANOUT SHALL BE CUT TO GRADE ONCE FINISHED GRADE IS ESTABLISHED.

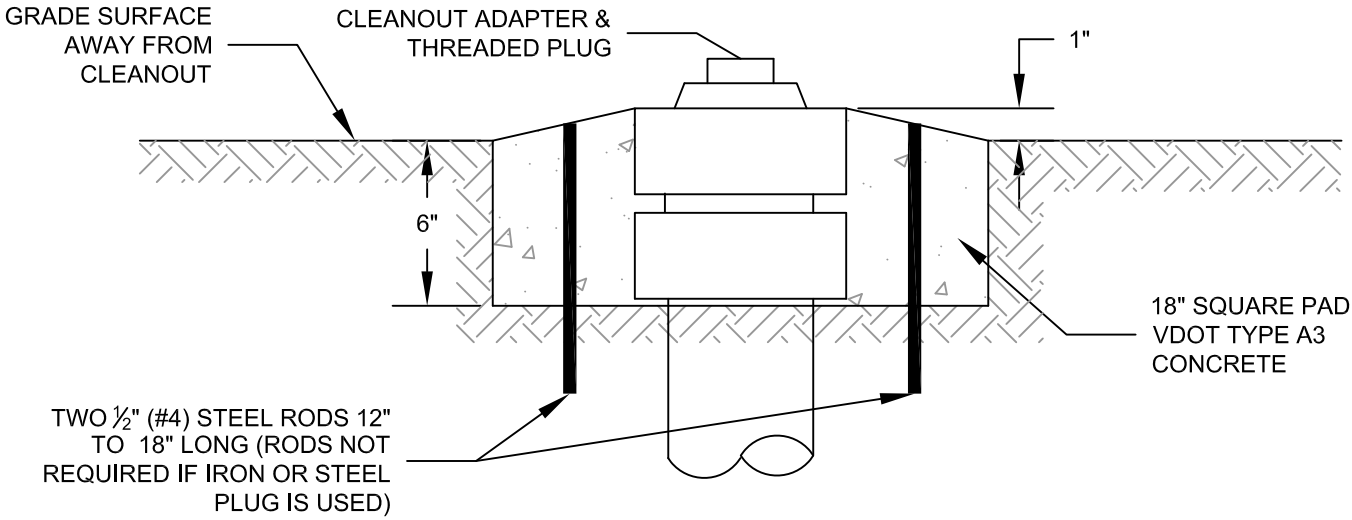

CLEANOUT COVER - STANDARD

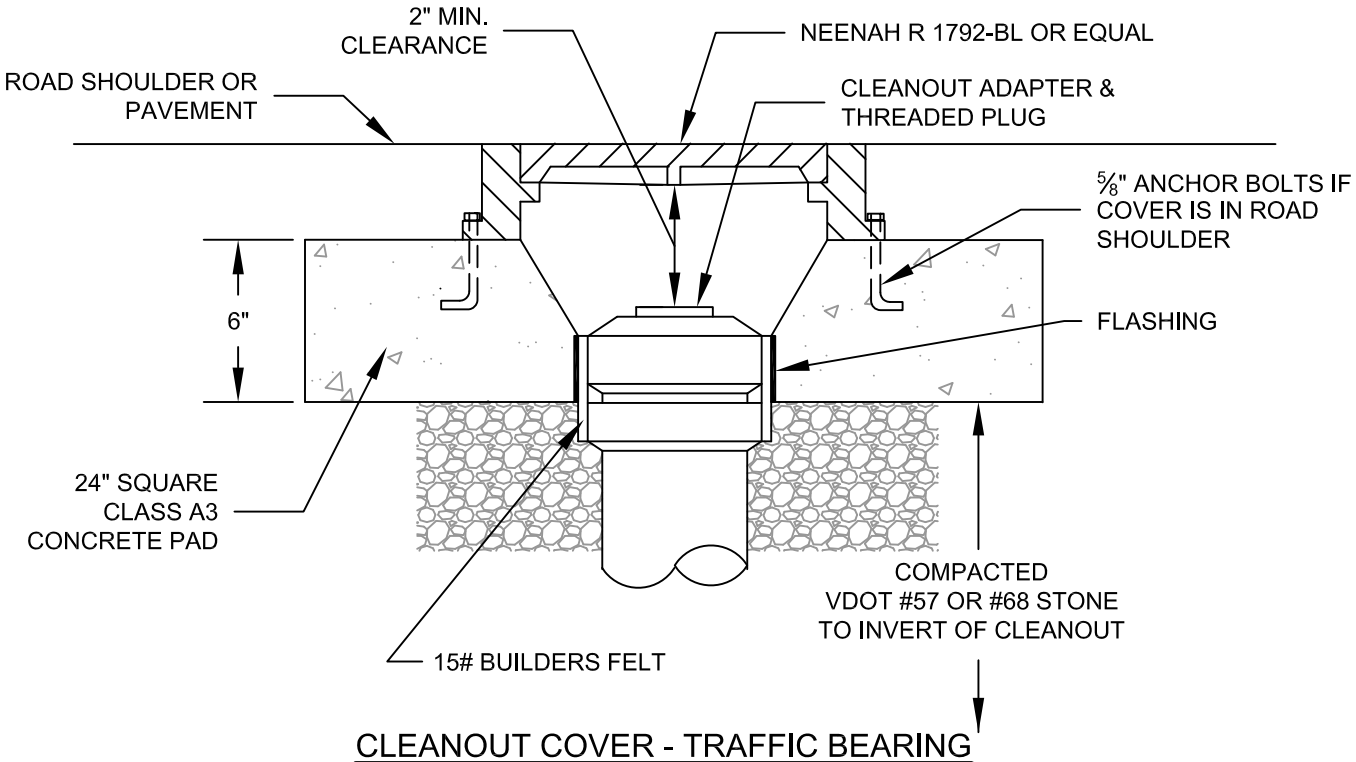

CLEANOUT COVER - TRAFFIC BEARING

FOR USE WITH ALL CLEANOUTS IN PAVEMENT & SIDEWALKS AS SPECIFIED ON PLANS

Bedford Regional Water Authority

No.	Date
1	August 20, 2012
2	October 6, 2017
3	
4	

CLEANOUT COVERS
STANDARD AND TRAFFIC BEARING

Detail: **CO-T**

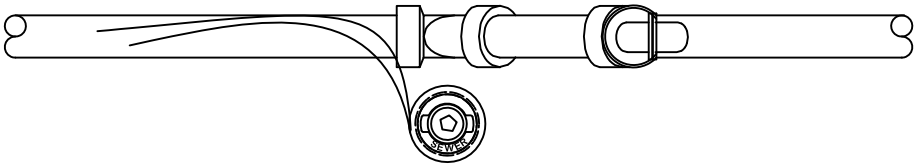

PLAN

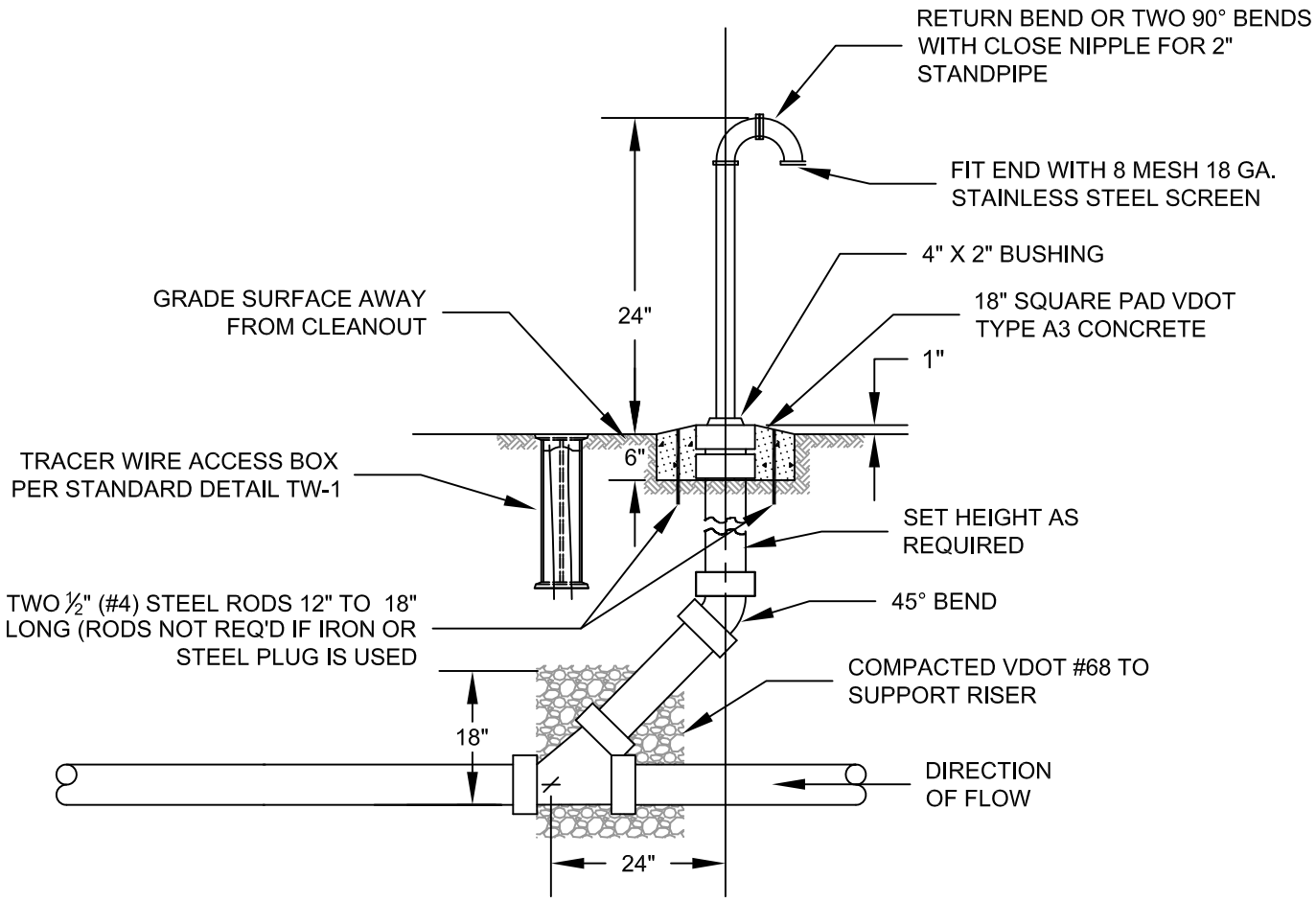

ELEVATION

Bedford Regional Water Authority

No.	Date
1	August 20, 2012
2	October 6, 2017
3	
4	

VENTILATED SANITARY SEWER CLEANOUT
FOR USE WITH AND STANDARD CLEAN OUT

Detail:

CO-V

NOTES:

1. SPACERS SHALL BE RACI HDPE, SPIDER OR EQUIVALENT.
2. SPACERS SHALL BE SPACED 6 1/2' ON SEWER PIPE.
3. CARRIER PIPE SHALL BE DUCTILE, HDPE, OR PVC IN ACCORDANCE WITH THE SPECIFICATIONS.
4. ENCASEMENT PIPE TO BE IN ACCORDANCE WITH SPECIFICATIONS AND VDOT REQUIREMENTS.
5. CONCRETE ENCASEMENT PIPE WILL NOT BE ALLOWED.
6. DIAMETER OF CASING PIPE PER SPECIFICATIONS OR AS OTHERWISE APPROVED BY AUTHORITY.

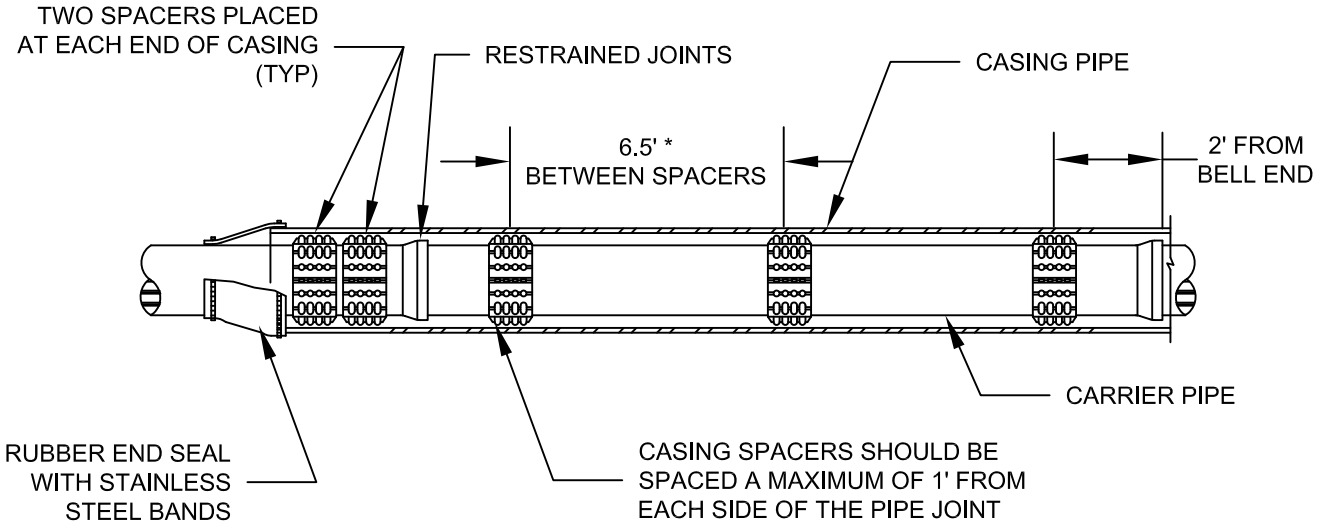

* ADDITIONAL SPACING ALLOWED AS RECOMMENDED BY PIPE MANUFACTURER.

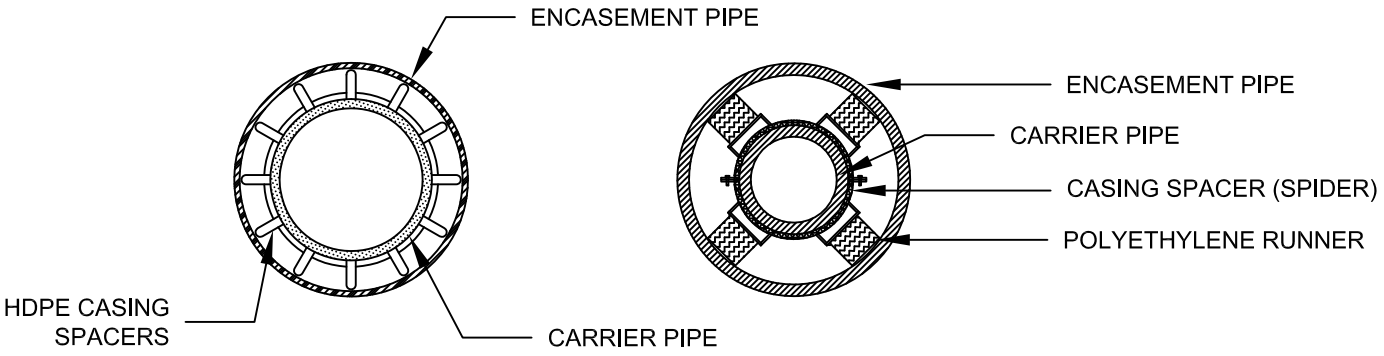

Bedford Regional Water Authority

No.	Date
1	August 20, 2012
2	October 6, 2017
3	
4	

SEALED CASINGS INSTALLATION

Detail: **CS-1**

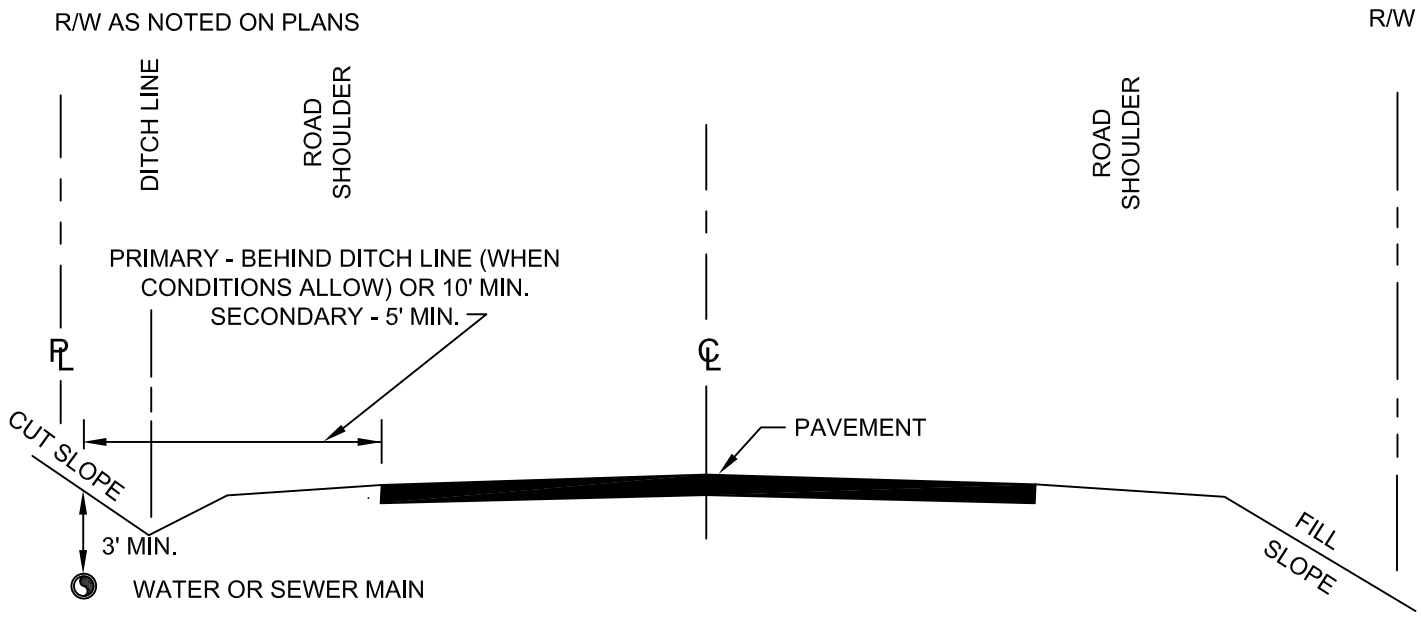

PARALLEL INSTALLATION

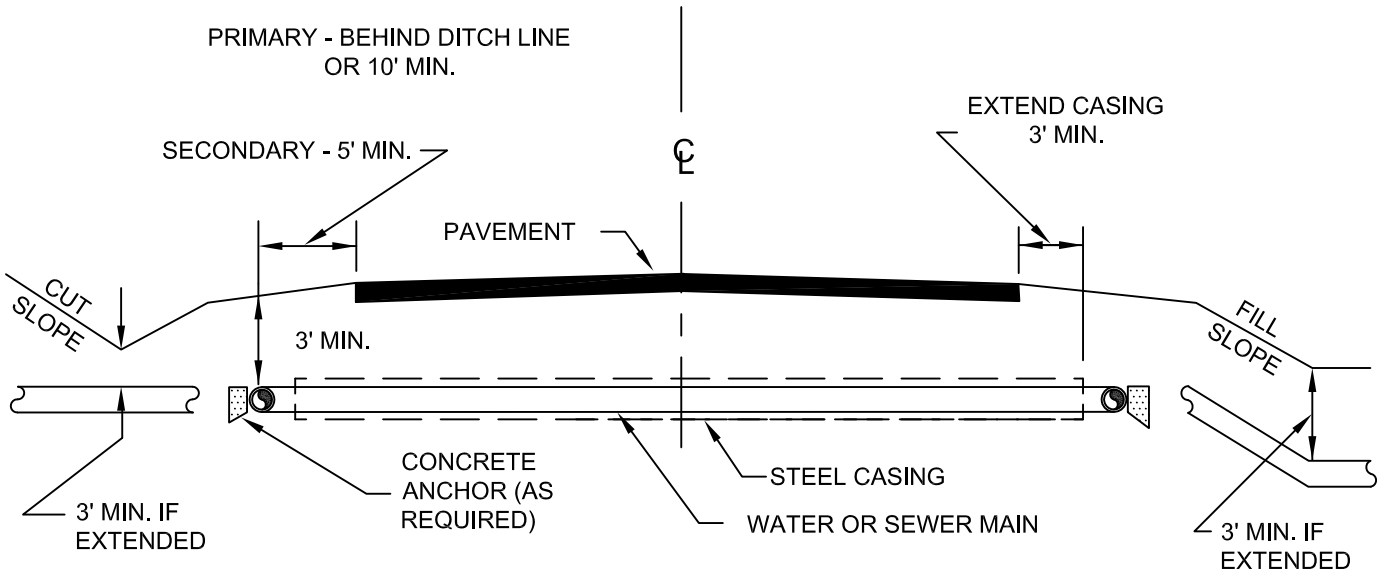

CROSSING INSTALLATION

NOTES:

1. PLACE VALVES AS NOTED ON PLAN.
2. VERIFY LOCAL REQUIREMENTS WITH VDOT RESIDENCY.
3. LINE PLACEMENT WITHIN R.O.W. SHALL BE REVIEWED ON A CASE BY CASE BASIS.
4. NOT TO SCALE

Bedford Regional Water Authority

No.	Date
1	August 20, 2012
2	October 6, 2017
3	
4	

TYPICAL WATER OR SEWER MAIN LOCATION WITHIN V.D.O.T. RIGHT-OF-WAY

Detail: **CS-2**

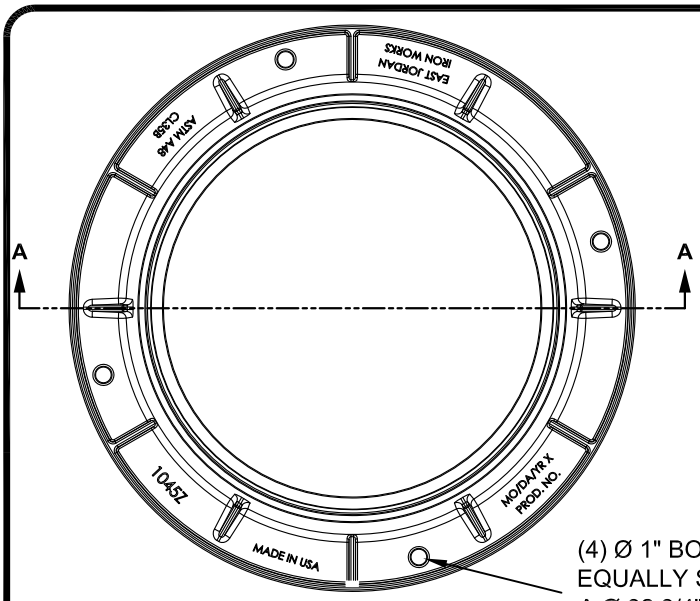

(4) Ø 1" BOLT HOLES EQUALLY SPACED ON A Ø 32 3/4" BOLT CIRCLE

FRAME PLAN

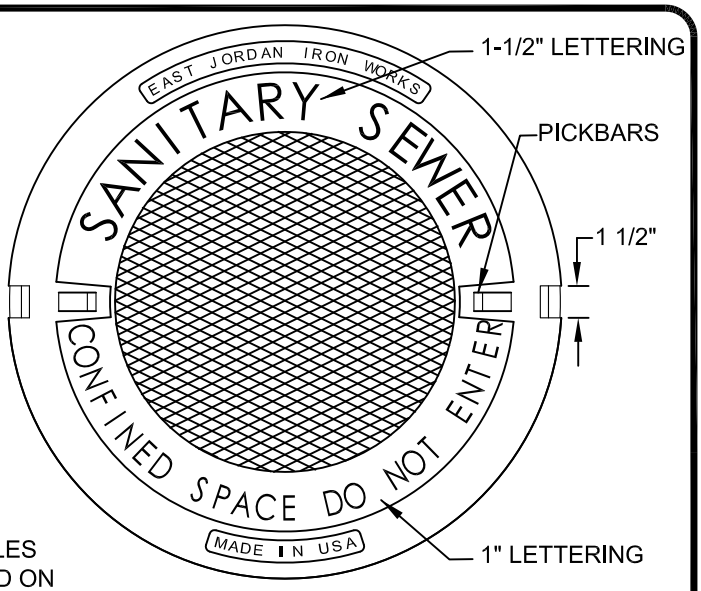

TOP OF COVER

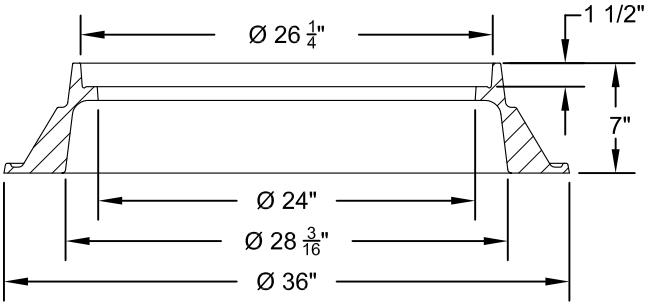

FRAME SECTION A-A

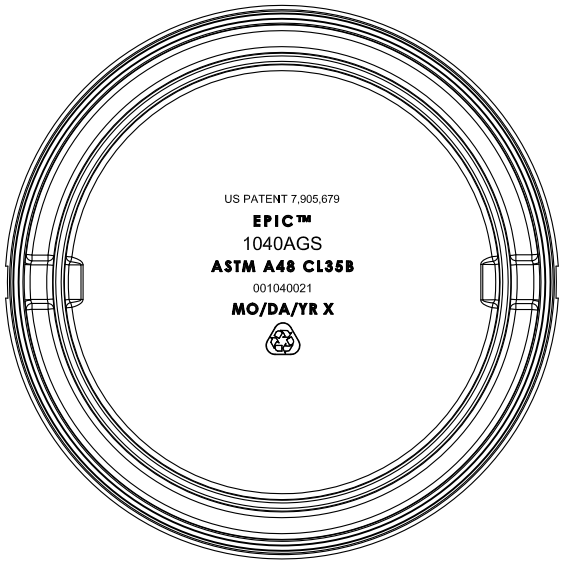

BOTTOM OF COVER

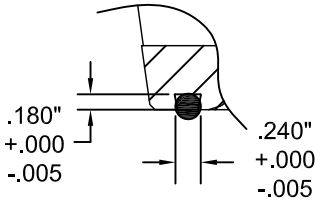

GROOVE DETAIL

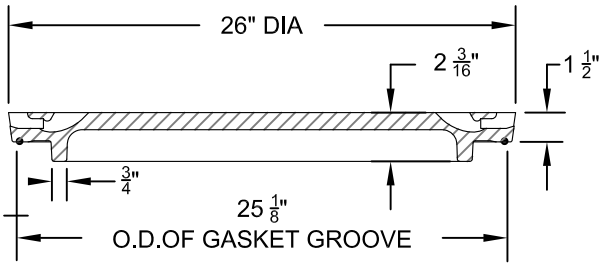

COVER SECTION

1. MANHOLE FRAME SHALL BE MODEL NO. 1045Z BY EAST JORDAN IRON WORKS OR APPROVED EQUAL.
2. STANDARD MANHOLE COVER SHALL BE MODEL NO. 1040AGS BY EAST JORDAN IRON WORKS OR APPROVED EQUAL.
3. MANHOLE FRAME AND COVER SHALL MEET CURRENT REQUIREMENTS OF THE VIRGINIA DEQ, VDOT, AASHTO M-306 AND AASHTO M-105.
4. MANHOLE FRAME AND COVER SHALL MEET THE FOLLOWING MINIMUM DIMENSIONS:
   a. COVER DIAMETER - 26”
   b. COVER THICKNESS - 1-1/2 “
   c. FRAME OPENING - 24”

Bedford Regional Water Authority

No.	Date
1	August 20, 2012
2	October 6, 2017
3	
4	

STANDARD MANHOLE FRAME & COVER

Detail: **FC-1**

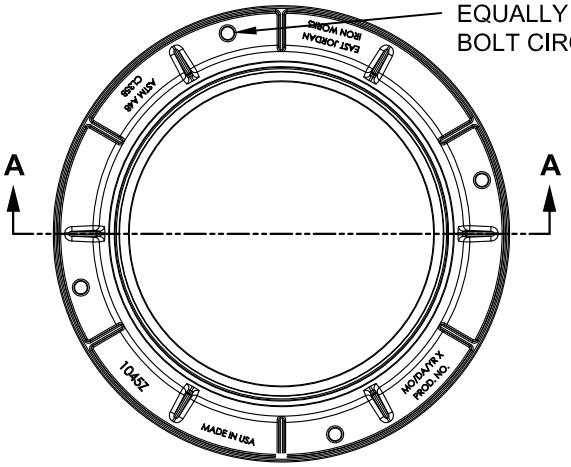

FRAME PLAN

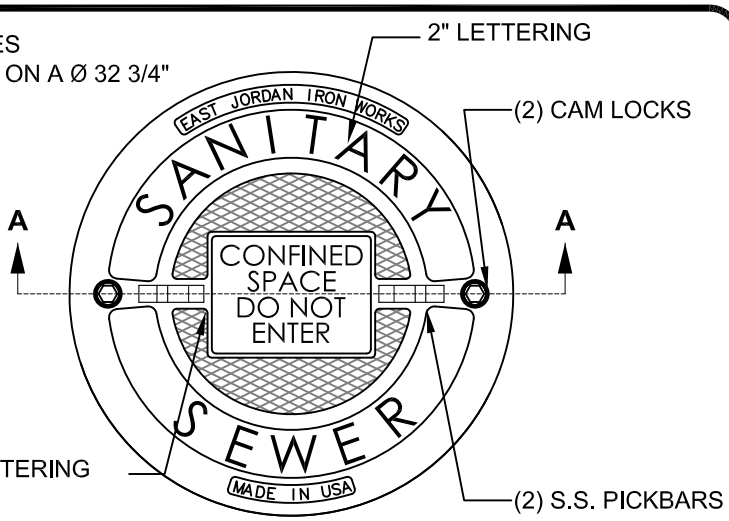

TOP OF COVER

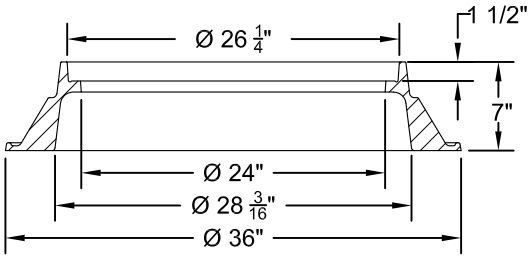

FRAME SECTION A-A

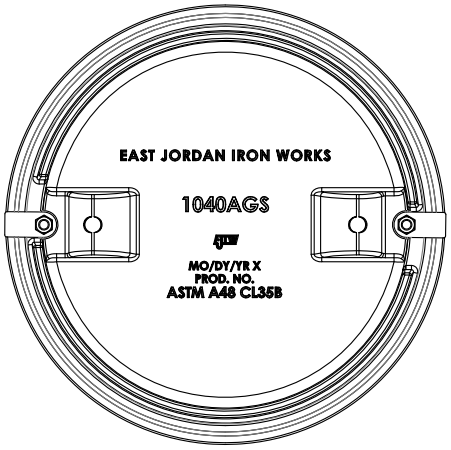

BOTTOM OF COVER

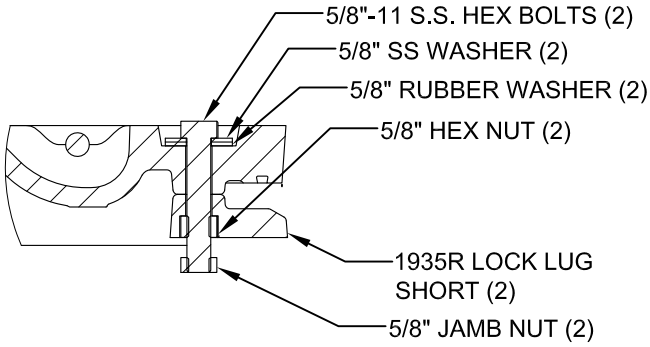

COVER DETAIL B

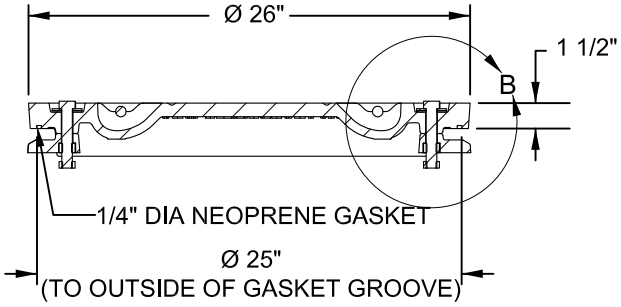

COVER SECTION A-A

1. MANHOLE FRAME SHALL BE MODEL NO. 1045Z BY EAST JORDAN IRON WORKS OR APPROVED EQUAL.
2. WATERTIGHT MANHOLE COVER SHALL BE MODEL NO. 1040AGSCL BY EAST JORDAN IRON WORKS OR APPROVED EQUAL.
3. MANHOLE FRAME AND COVER SHALL MEET CURRENT REQUIREMENTS OF THE VIRGINIA DEQ, VDOT, AASHTO M-306 AND AASHTO M-105.
4. MANHOLE FRAME AND COVER SHALL MEET THE FOLLOWING MINIMUM DIMENSIONS:
   a. COVER DIAMETER - 26”
   b. COVER THICKNESS - 1-1/2 “
   c. FRAME OPENING - 24”

Bedford Regional Water Authority

No.	Date
1	August 20, 2012
2	October 6, 2017
3	
4	

WATERTIGHT MANHOLE FRAME & COVER

Detail: **FC-2**

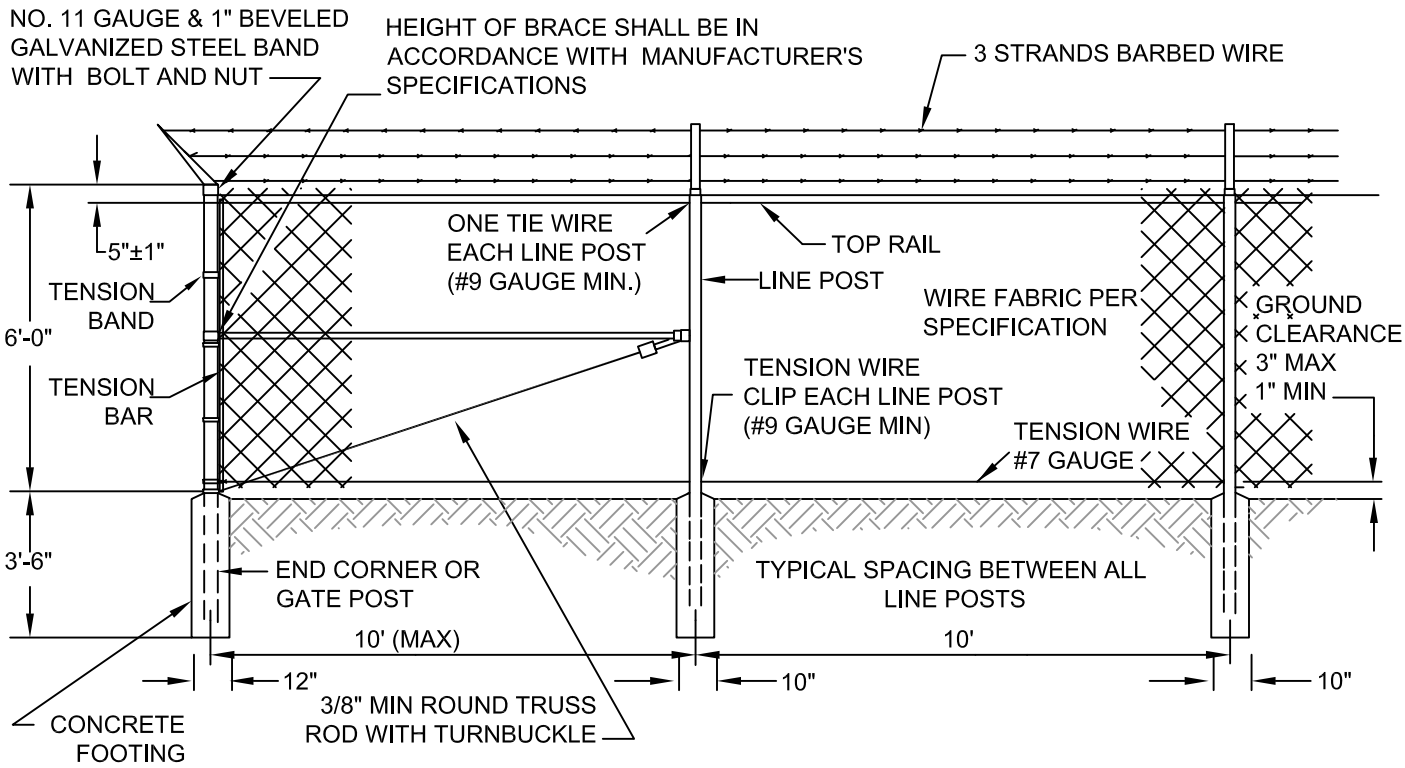

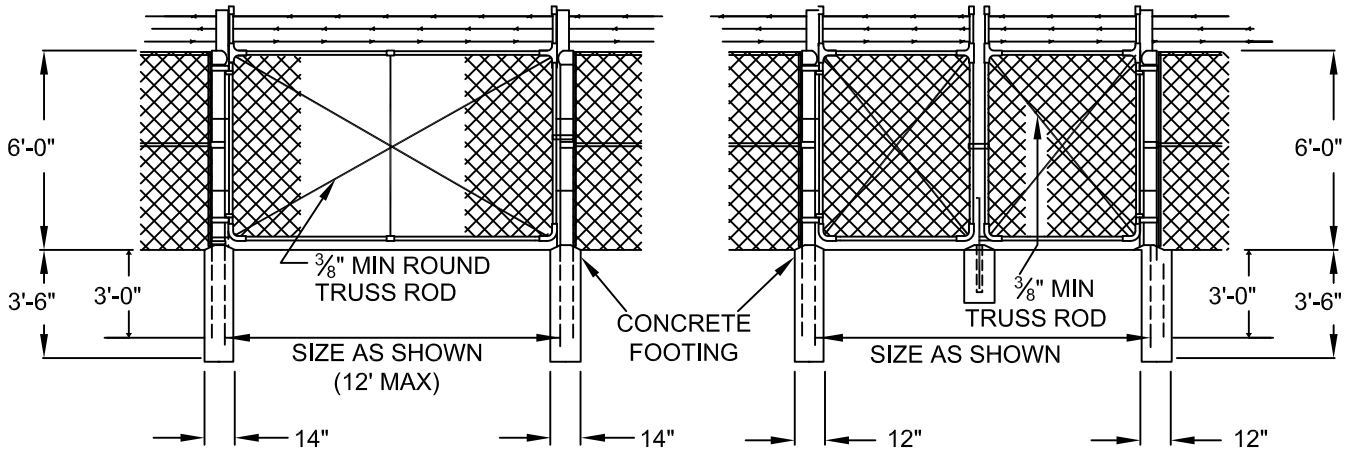

SINGLE SWING GATE **DOUBLE SWING GATE**

LINE BRACE - SHALL BE USED WHEN VERTICAL ALIGNMENT CHANGES 15°. (MAX SPACING 500')
- SHALL BE USED AT FENCE END (AS SHOWN ABOVE) AND GATE LOCATIONS

CORNER BRACE - SHALL BE USED WHEN HORIZONTAL ALIGNMENT CHANGES 15° OR MORE - SHALL BE AS DETAILED ABOVE WITH BRACING IN BOTH DIRECTIONS

NOTES:

CANTILEVERED SLIDING GATES SHALL BE OF LIGHTWEIGHT CONSTRUCTION AND DESIGN CONFORMING TO CLFMI STANDARDS, AND SHALL BE APPROVED BY THE AUTHORITY.

Bedford Regional Water Authority

No.	Date
1	August 20, 2012
2	October 6, 2017
3	
4	

CHAIN LINK FENCE INSTALLATION

Detail: FE-1

NOTES:

1. APPLY FINISH PAINT COAT TO HYDRANT AFTER INSTALLATION PER SPECIFICATIONS.
2. FIRE HYDRANT LOCATION SHALL BE INSTALLED PER SPECIFICATIONS AND AUTHORITY POLICIES.
3. AREA AROUND HYDRANT AT A RADIUS OF 4' TO BE LEVEL AND UNOBSTRUCTED.
4. WATERPROOF BAGS OR OUT OF SERVICE RINGS SHALL BE PLACED OVER ALL NEWLY INSTALLED FIRE HYDRANTS.
5. HIGH PRESSURE (OVER 120 PSI) REQUIRES THE USE OF ALL 3 RESTRAINTS.
6. IF DURING CONSTRUCTION THE SEASONAL WATER LEVEL IS NOTED TO BE ABOVE THE DRAIN OUTLETS OF THE PROPOSED HYDRANT, THE AUTHORITY WILL BE NOTIFIED IMMEDIATELY SO THAT THE HYDRANT CAN BE RELOCATED TO A SUITABLE LOCATION OR OMITTED.
7. ON VDOT R/W, RECESS VALVE BOX TOP 4" MIN.; OTHERWISE SET AT EXISTING OR PROPOSED FINISHED GRADE.

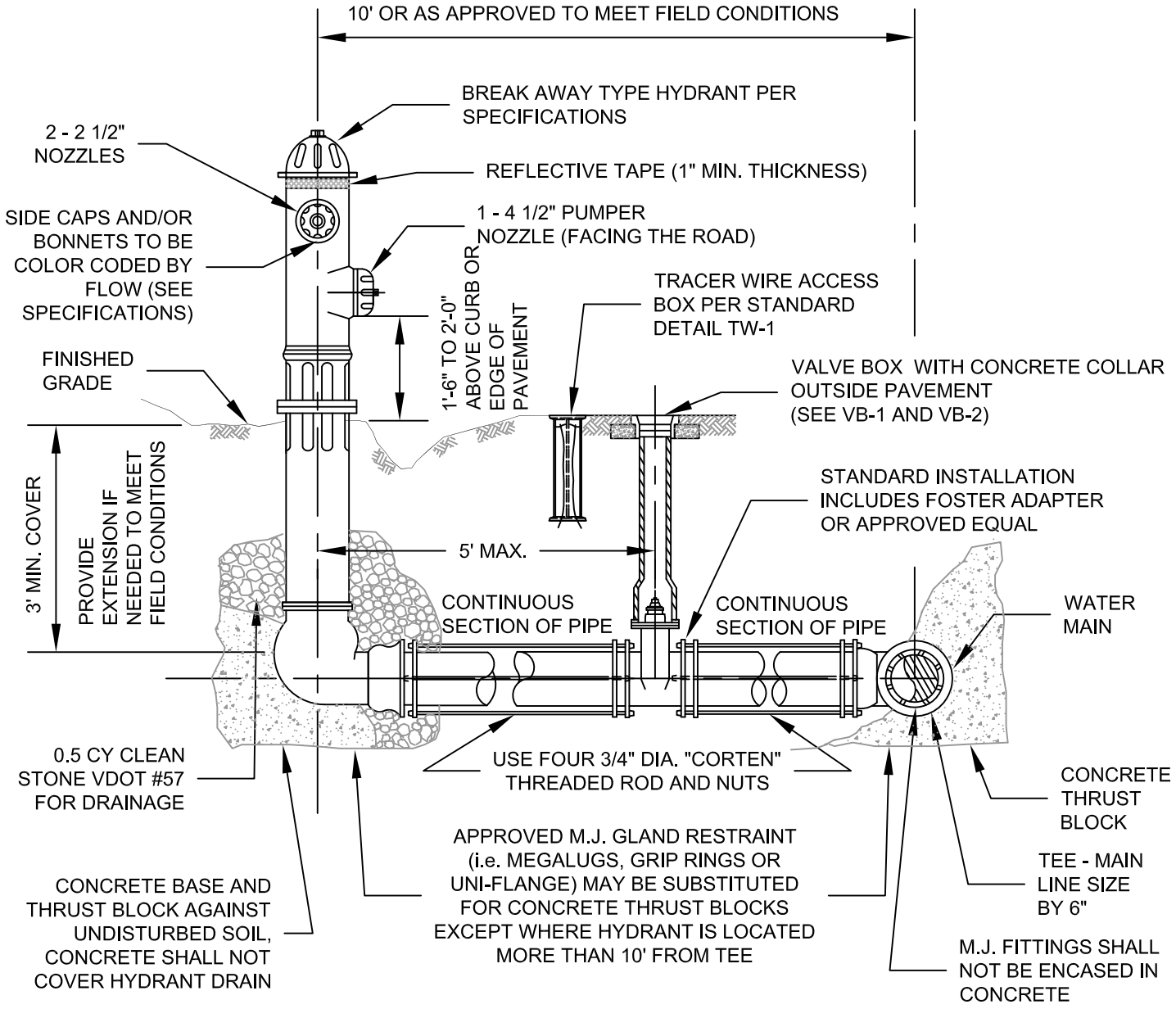

Bedford Regional Water Authority

No.	Date
1	August 20, 2012
2	October 6, 2017
3	
4	

FIRE HYDRANT INSTALLATION

Detail: **FH-1**

NOTES:

1. APPLY FINISH PAINT COAT TO HYDRANT AFTER INSTALLATION PER SPECIFICATIONS.
2. FIRE HYDRANT LOCATION SHALL BE INSTALLED PER SPECIFICATIONS AND AUTHORITY POLICIES.
3. AREA AROUND HYDRANT AT A RADIUS OF 4' TO BE LEVEL AND UNOBSTRUCTED.
4. WATERPROOF BAGS OR OUT OF SERVICE RINGS SHALL BE PLACED OVER ALL NEWLY INSTALLED FIRE HYDRANTS.
5. HIGH PRESSURE (OVER 120 PSI) REQUIRES THE USE OF ALL 3 RESTRAINTS.
6. IF DURING CONSTRUCTION THE SEASONAL WATER LEVEL IS NOTED TO BE ABOVE THE DRAIN OUTLETS OF THE PROPOSED HYDRANT, THE AUTHORITY WILL BE NOTIFIED IMMEDIATELY SO THAT THE HYDRANT CAN BE RELOCATED TO A SUITABLE LOCATION OR OMITTED.
7. ON VDOT R/W, RECESS VALVE BOX TOP 4" MIN.; OTHERWISE SET AT EXISTING OR PROPOSED FINISHED GRADE.

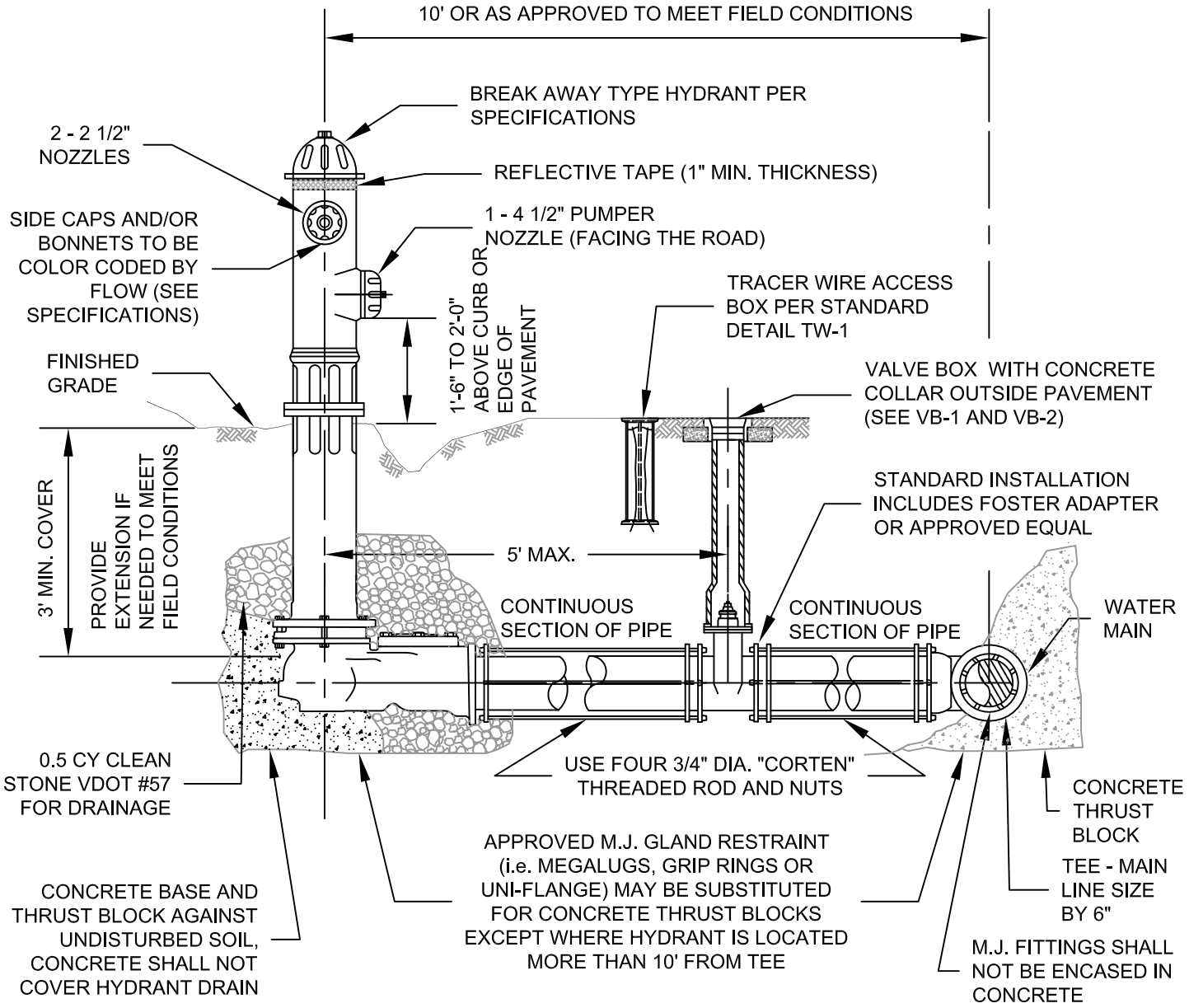

Bedford Regional Water Authority

No.	Date
1	October 6, 2017
2	
3	
4	

FIRE HYDRANT WITH CHECK VALVE INSTALLATION

Detail: **FH-2**

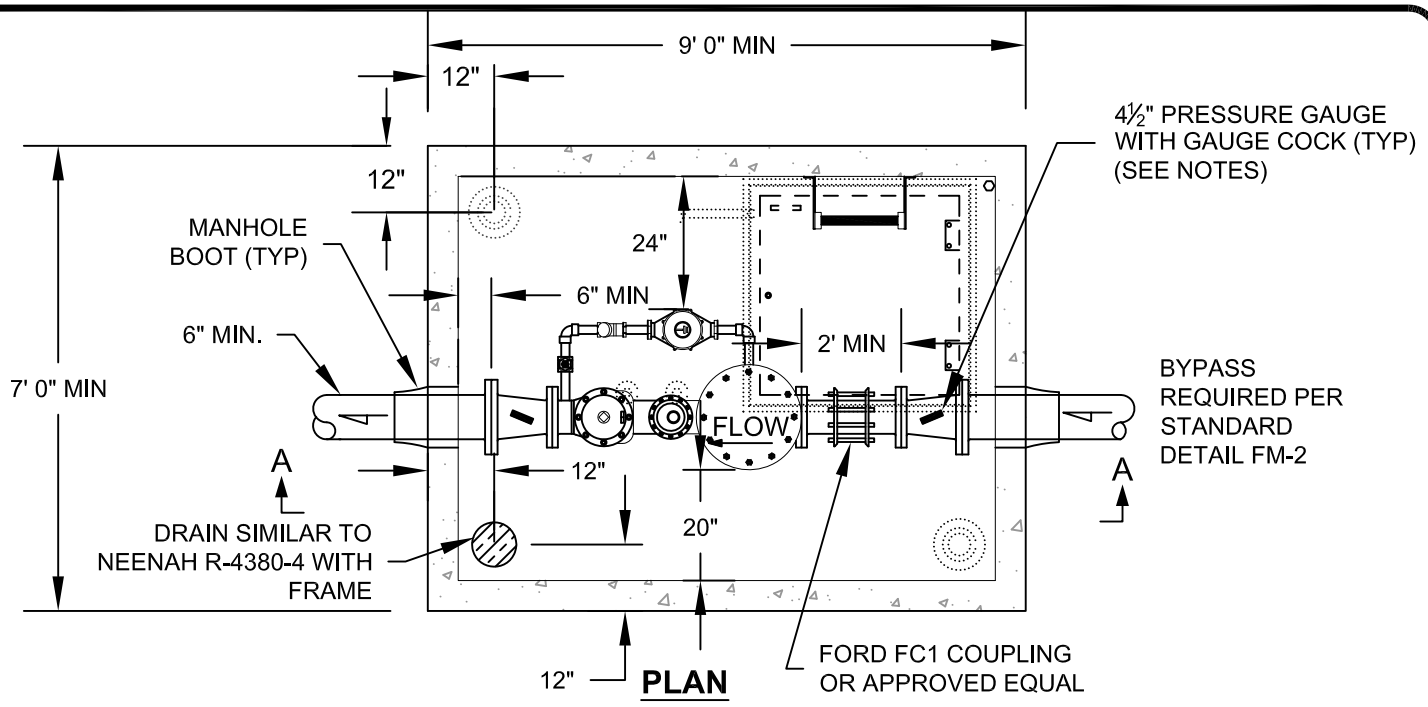

PLAN

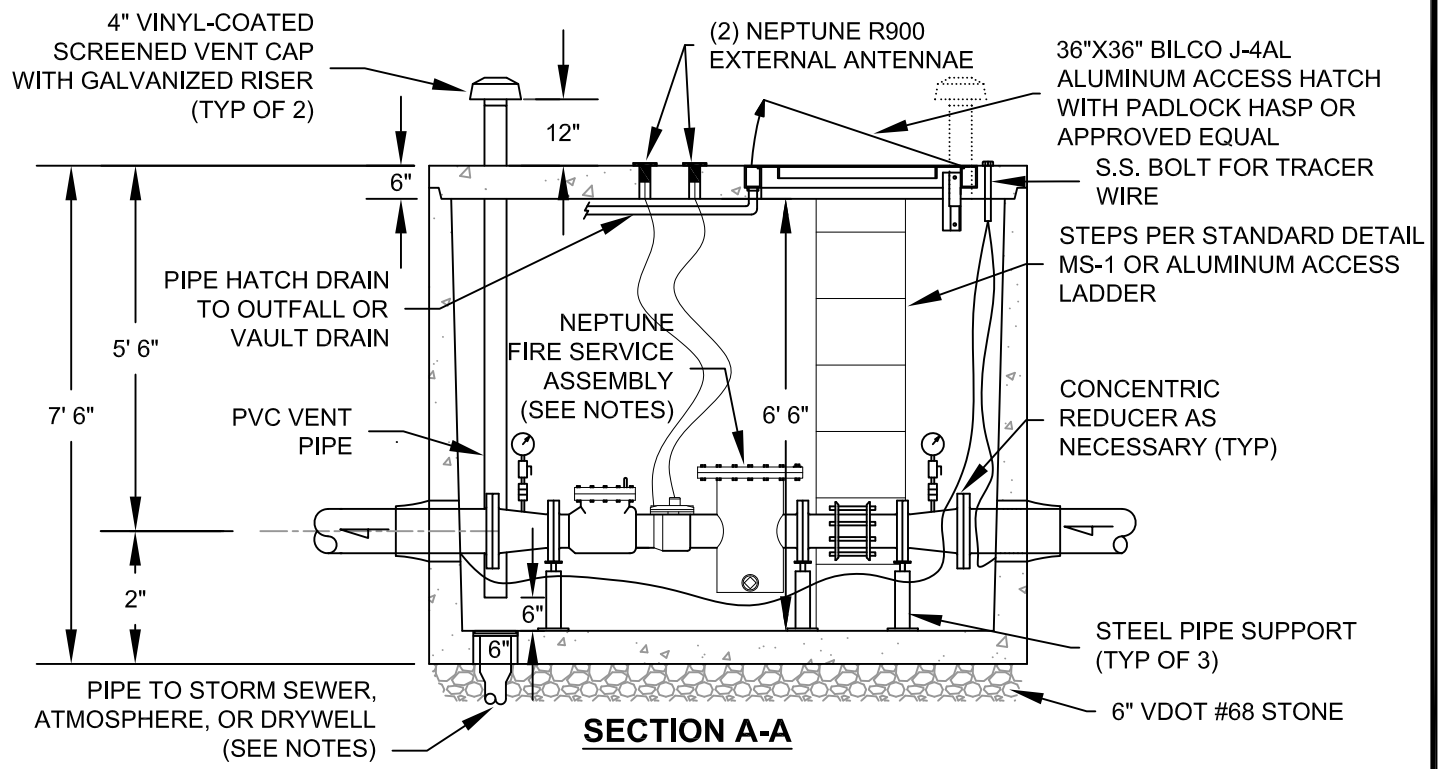

SECTION A-A

NOTES:

1. NEPTUNE HP PROTECTUS III F.S. METER ASSEMBLY WITH BYPASS METER AND R-900 EXTERNAL ANTENNAE
2. PRESSURE GUAGES SHALL BE 4½" ASHCROFT #1082 (0-300 PSI) WITH GAUGE COCK OR APPROVED EQUAL
3. TEMPORARY CAP AND BLOW OFF ARE NECESSARY PAST THE BYPASS ASSEMBLY FOR TESTING PURPOSES.
4. WHERE APPROVED BY THE AUTHORITY TO BE LOCATED IN AREAS SUBJECT TO TRAFFIC, VAULT SHALL BE RATED FOR H-20 LOADING WITH BILCO J-H20 HATCH OR APPROVED EQUAL.
5. DRYWELL SHALL BE 4' DIAMETER X 4' DEEP VDOT #57 STONE WRAPPED WITH MIRAFI N-SERIES NONWOVEN POLYPROPYLENE GEOTEXTILE.

Bedford Regional Water Authority

No.	Date
1	August 20, 2012
2	October 6, 2017
3	
4	

FIRE FLOW METER INSTALLATION

Detail: **FM-1**

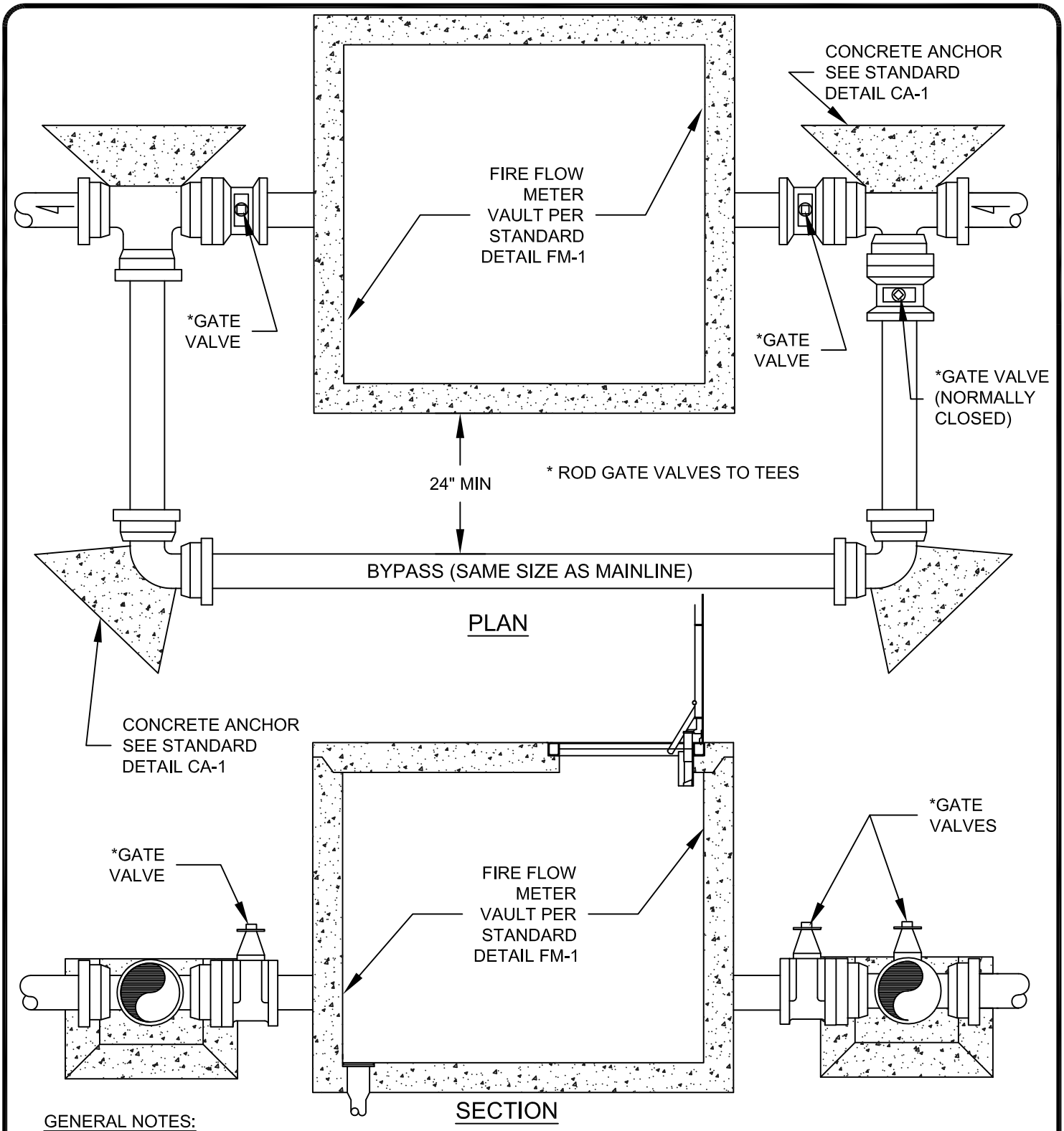

GENERAL NOTES:

1. SEE STANDARD DETAIL FM-1 FOR METER AND VAULT.
2. TRACER WIRE REQUIRED ON ALL BYPASS PIPING PER SPECIFICATIONS.
3. TEMPORARY CAP AND BLOW OFF IS NECESSARY PAST THE ASSEMBLY FOR TESTING PURPOSES.
4. IF PIPE SIZE REDUCTION IS NECESSARY, REDUCE INSIDE VAULT. SEE STANDARD DETAIL FM-1.
5. BYPASS PIPING MATERIAL SHALL BE ALL DUCTILE IRON MEETING SPECIFICATIONS.

Bedford Regional Water Authority

No.	Date
1	August 20, 2012
2	October 6, 2017
3	
4	

FIRE FLOW METER VAULT
EXTERNAL BYPASS

Detail:

FM-2

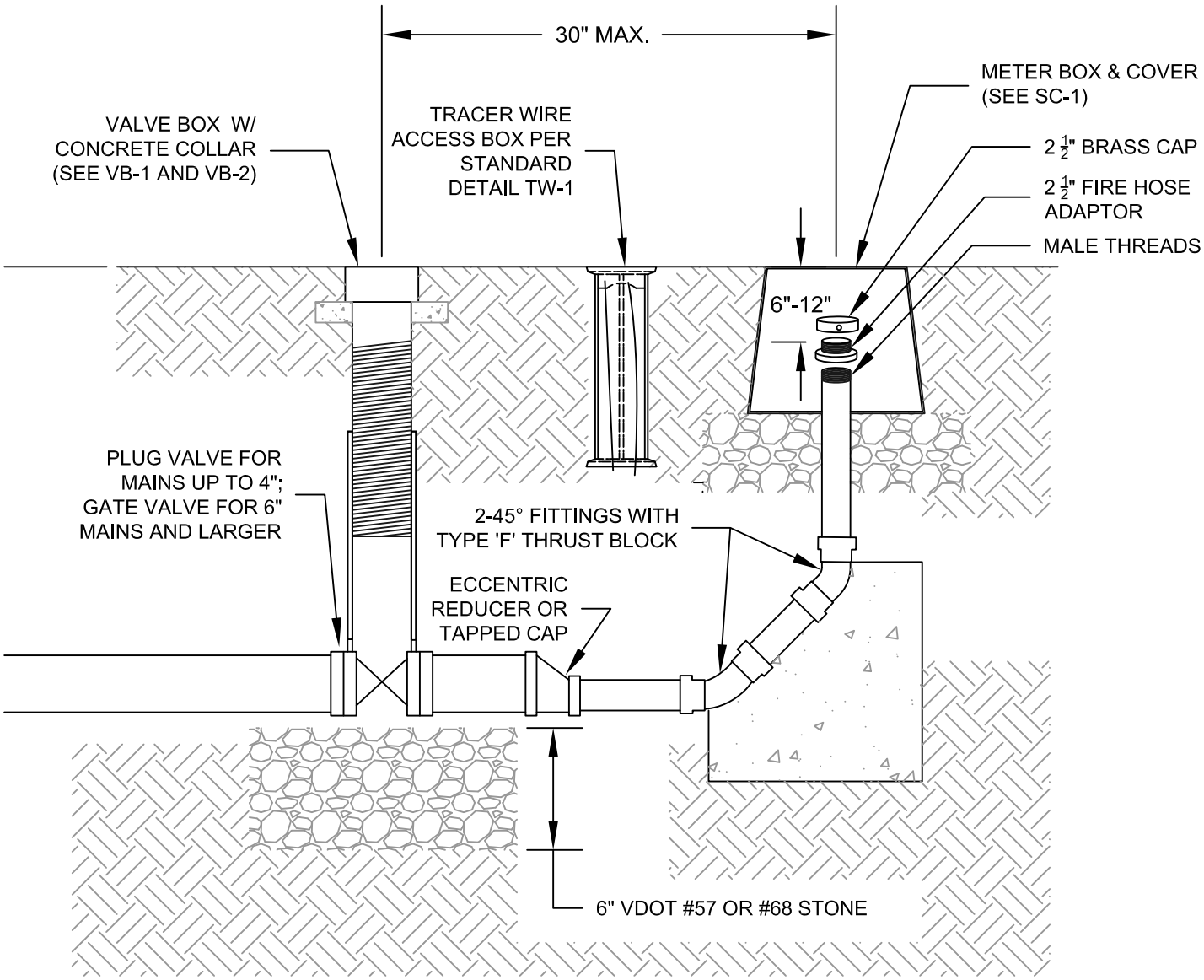

NOTE: VALVES AND FITTINGS SHALL BE SAME SIZE AS FORCE MAIN.

Bedford Regional Water Authority

No.	Date
1	August 20, 2012
2	October 6, 2017
3	
4	

FORCE MAIN FLUSHING VALVE

Detail:

FV-1

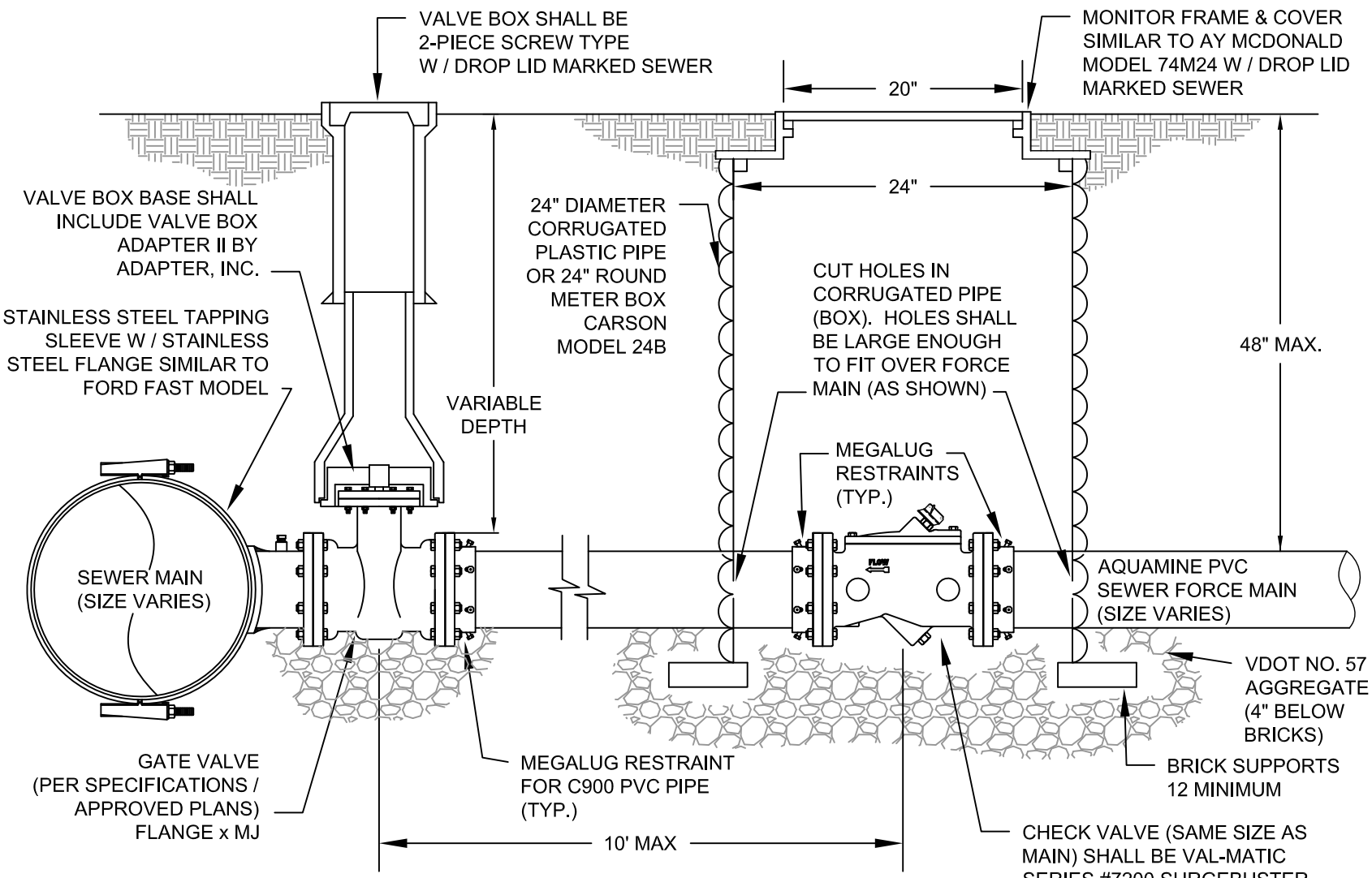

NOTES:

1. ALL FORCE MAIN SEWER MAIN LINES SMALLER THAN 6-INCHES SHALL BE SDR 21 AQUAMINE OR YELLOWMINE PVC.
2. ALL FORCE MAIN SEWER MAIN LINES SIX-INCHES AND LARGER MAY BE EITHER DUCTILE IRON PIPE OR PVC PER MASTER SPECIFICATIONS.
3. A DOGHOUSE MANHOLE PER STANDARD DETAIL MH-2 SHALL BE USED FOR CHECK VALVES LARGER THAN 6-INCHES OR WHERE DEEPER INSTALLATIONS ARE PERMITTED. CHECK VALVES SHALL NOT EXCEED 4-FEET DEPTH WITHOUT PRIOR WRITTEN APPROVAL.

Bedford Regional Water Authority

No.	Date
1	August 20, 2012
2	October 6, 2017
3	
4	

LOW PRESSURE SEWER FORCE MAIN
MAIN LINE CONNECTION
LARGER THEN 2"

Detail: GP-1

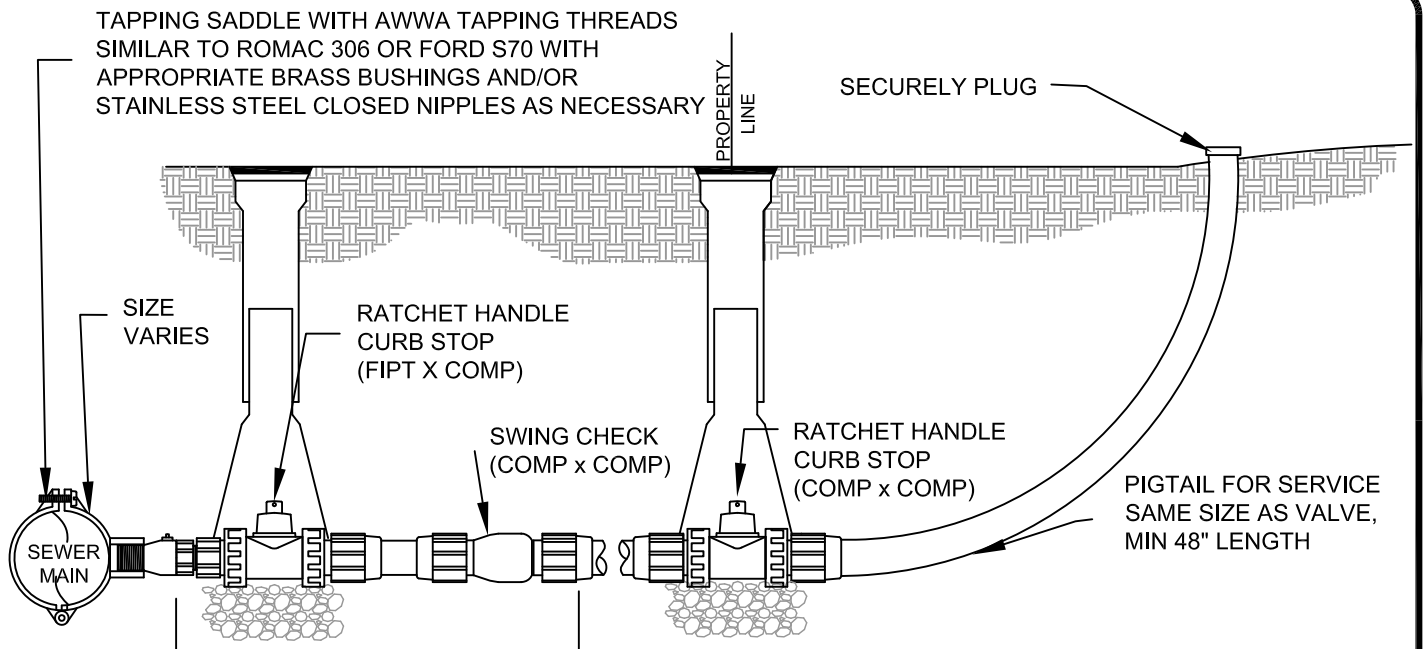

IN/OR CROSSING RIGHT-OF-WAY

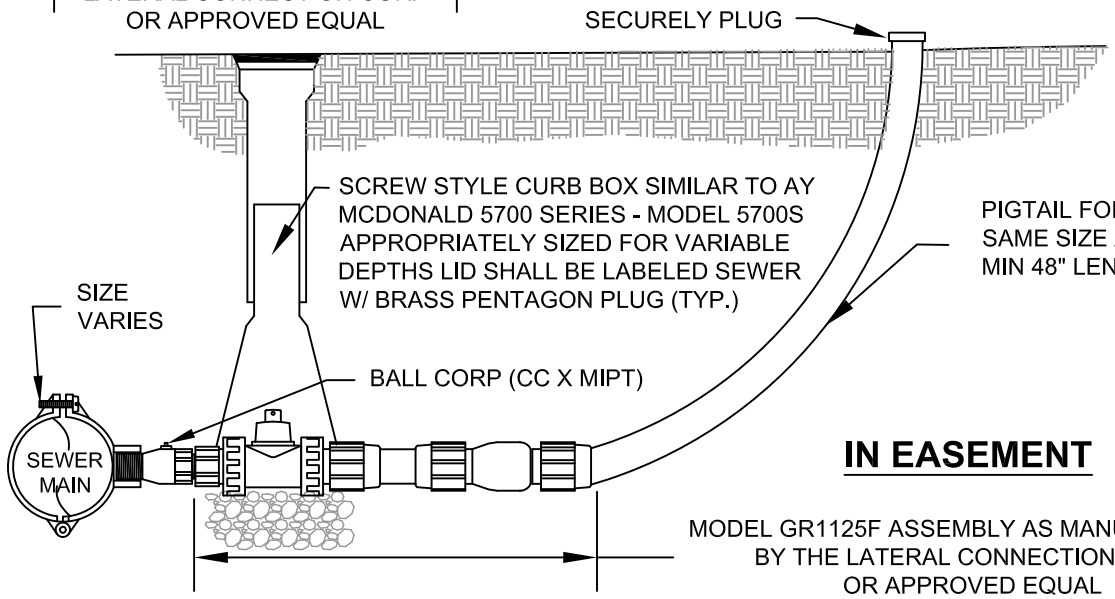

IN EASEMENT

NOTES:

1. ALL PIPING BETWEEN THE PUMP STATION AND THE SEWER FORCE MAIN SHALL BE SDR 9 OR SDR 11 HDPE PIPE RATED TO 200 PSI MIN.
2. ALL FITTINGS SHALL BE SPECIFIED AS HDPE FITTINGS, AND SHALL BE SIMILAR TO "THE LATERAL CONNECTION CORPORATION" PRODUCTS.
3. FOR STANDARD RESIDENTIAL APPLICATIONS, ALL HDPE PIPE AND FITTINGS SHALL BE 1 $\frac{1}{4}$ " DIAMETER, AND SHALL BE IRON PIPE SIZES (IPS).
4. WHEN FORCE MAIN IS INSTALLED ALONG RIGHT-OF-WAY, THE VALVE ASSEMBLY SHALL BE LOCATED BEHIND THE DITCH LINE.
5. TRACER WIRE IS REQUIRED TO BE INSTALLED WITH THE HDPE PIPE, TRAVELING FROM THE PUMP STATION TO THE SEWER MAIN CONNECTION.

Bedford Regional Water Authority

No.	Date
1	August 20, 2012
2	October 6, 2017
3	
4	

LOW PRESSURE SEWER
FORCE MAIN CONNECTION
(1 ¼ " TO 2")

Detail:

GP-2

NOTES:

1. GRINDER PUMPS SHALL BE LOCATED IN AN APPROVED LOCATION ON EACH LOT/PARCEL.
2. GRINDER PUMP MANUFACTURER TO BE REVIEWED AND APPROVED AT EACH LOCATION BY AUTHORITY BASED ON FLOW CAPACITY.
3. ASSEMBLY TO BE LOCATED AT A MINIMUM 10' DISTANCE FROM HOME OR PERMANENT STRUCTURE.

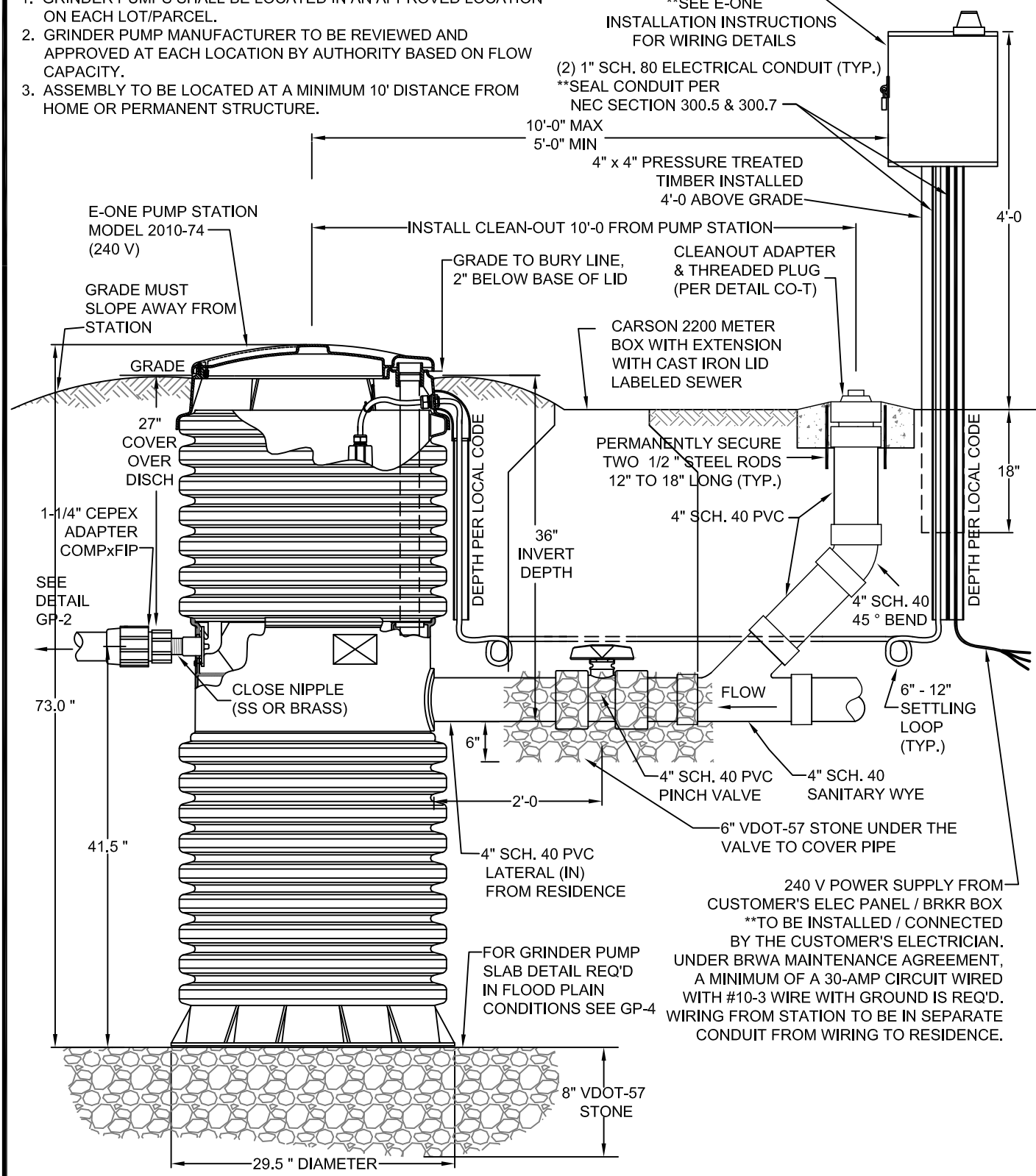

Bedford Regional Water Authority

No.	Date
1	July 19, 2013
2	October 6, 2017
3	February 15, 2018
4	

RESIDENTIAL E-ONE
MODEL 2010-074 PUMP STATION
INSTALLATION

Detail:

GP-3E

NOTES:

1. GRINDER PUMPS SHALL BE LOCATED IN AN APPROVED LOCATION ON EACH LOT/PARCEL.
2. GRINDER PUMP MANUFACTURER TO BE REVIEWED AND APPROVED AT EACH LOCATION BY AUTHORITY BASED ON FLOW CAPACITY.
3. ASSEMBLY TO BE LOCATED AT A MINIMUM 10' DISTANCE FROM HOME OR PERMANENT STRUCTURE.

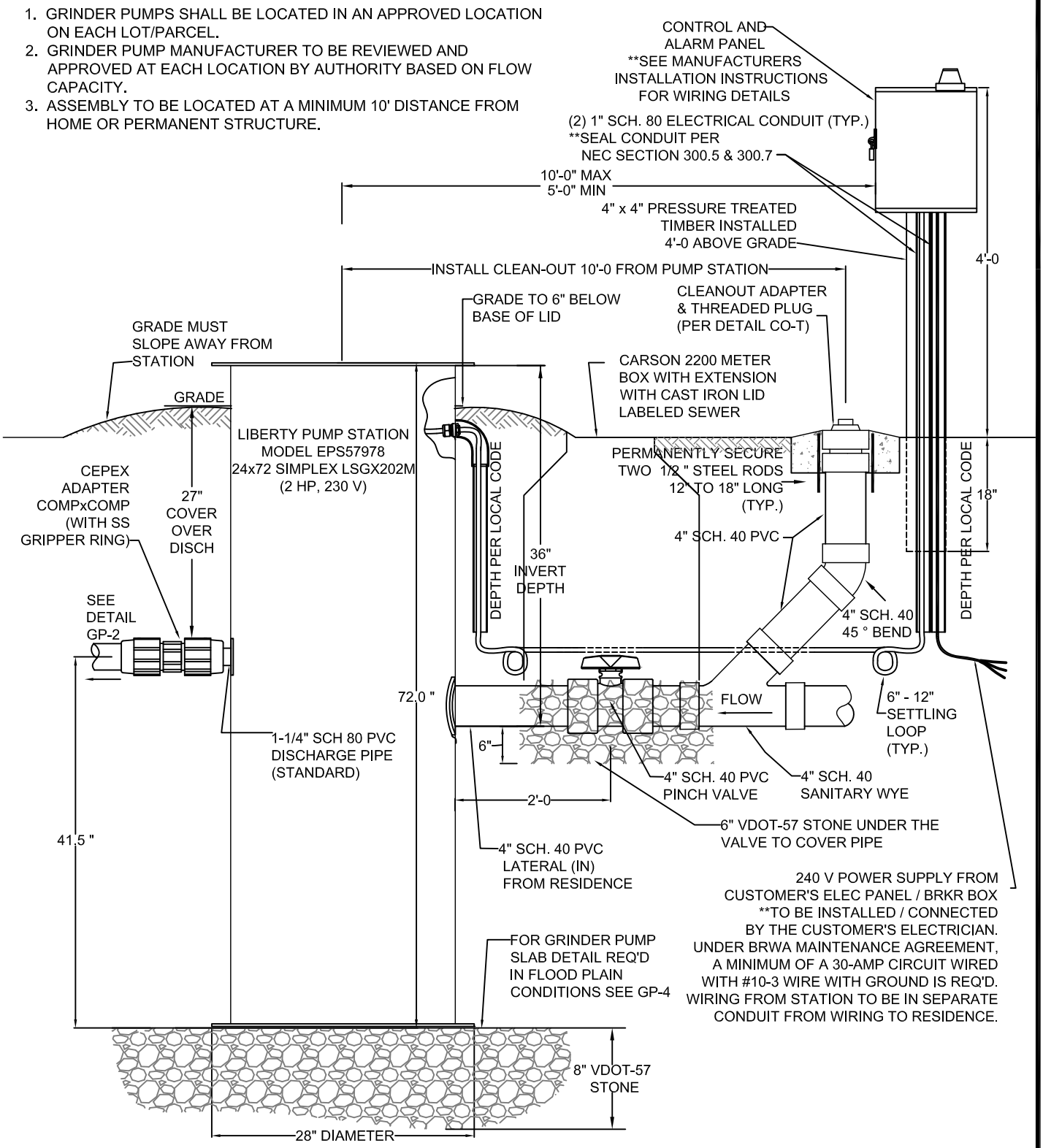

Bedford Regional Water Authority

No.	Date
1	July 19, 2013
2	October 6, 2017
3	February 15, 2018
4	

RESIDENTIAL LIBERTY
OMNIVORE MODEL 2472-LSGX
PUMP STATION INSTALLATION

Detail:

GP-3L

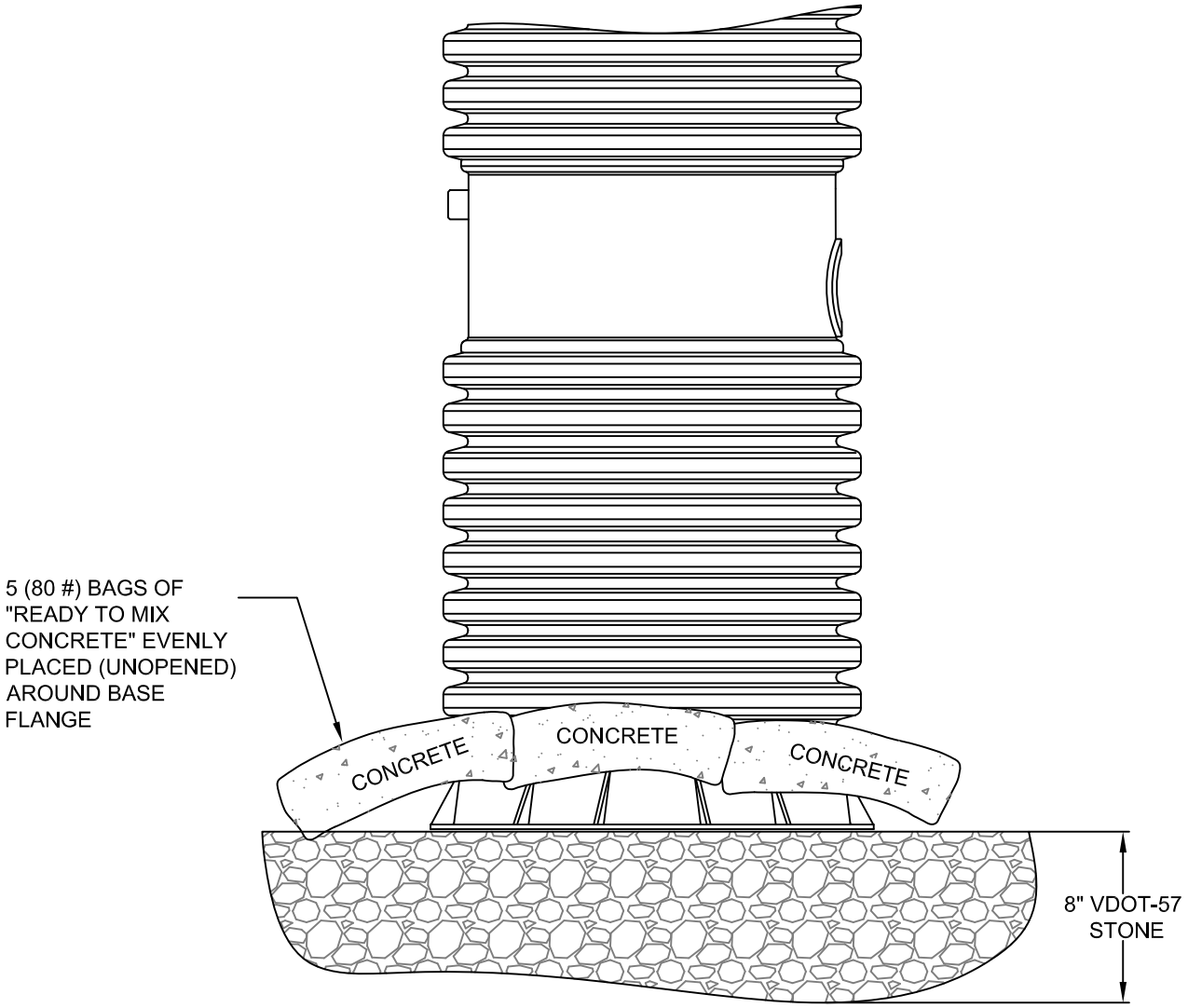

NOTE:

1. CONCRETE BAGS ARE REQUIRED TO PREVENT FLOATING IN FLOOD PLAIN CONDITIONS.

Bedford Regional Water Authority

No.	Date
1	July 19, 2013
2	October 6, 2017
3	
4	

PUMP STATION SLAB
MOUNTING DETAIL

Detail:

GP-4

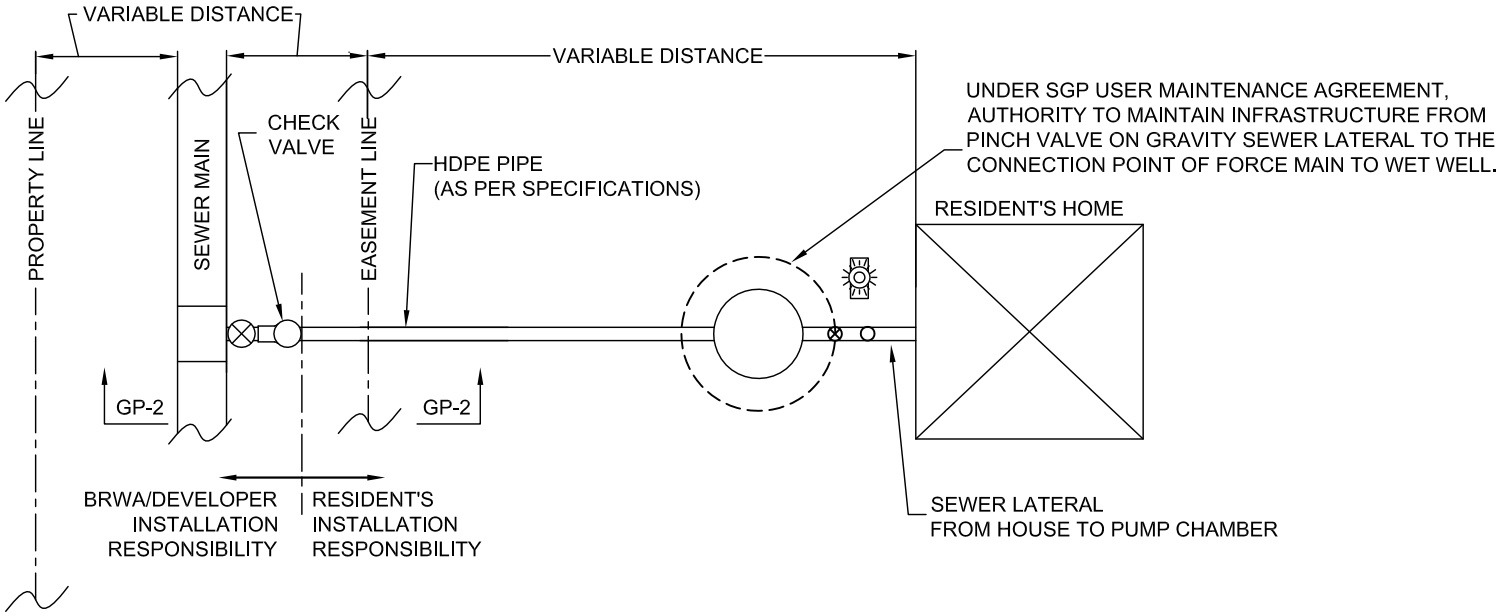

PRESSURE SEWER FORCE MAIN IN EASEMENT

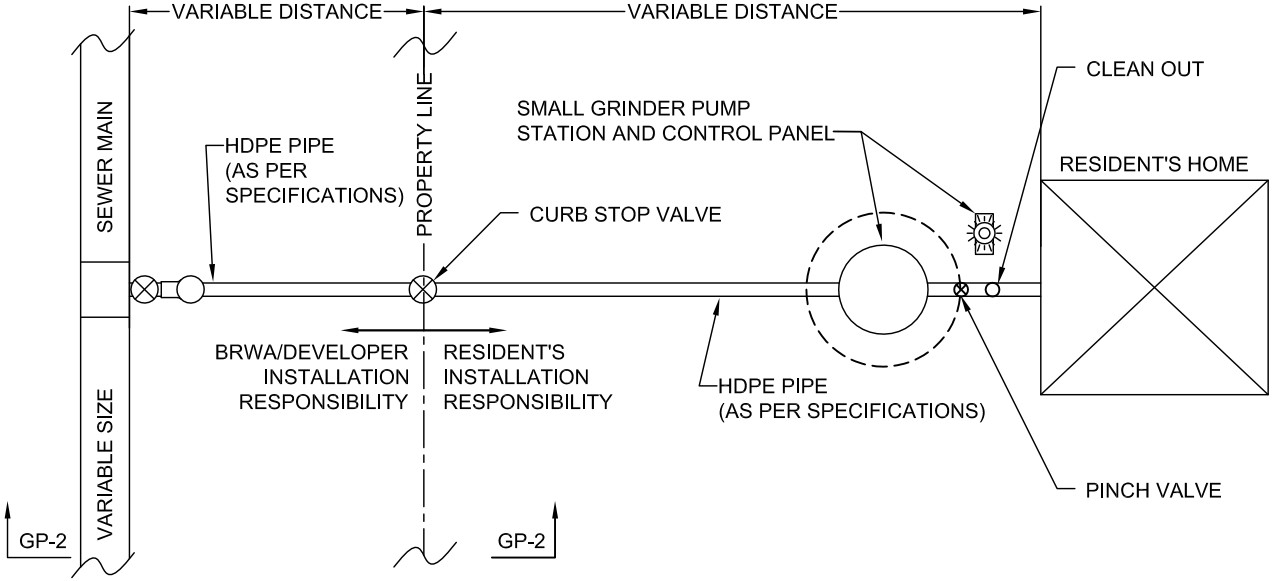

PRESSURE SEWER FORCE MAIN IN RIGHT-OF-WAY

Bedford Regional Water Authority

No.	Date
1	December 22, 2014
2	October 6, 2017
3	
4	

DIVISION OF PRESSURE SEWER/
SMALL GRINDER PUMP (SGP)
INSTALLATION DIAGRAM

Detail:
GP-8

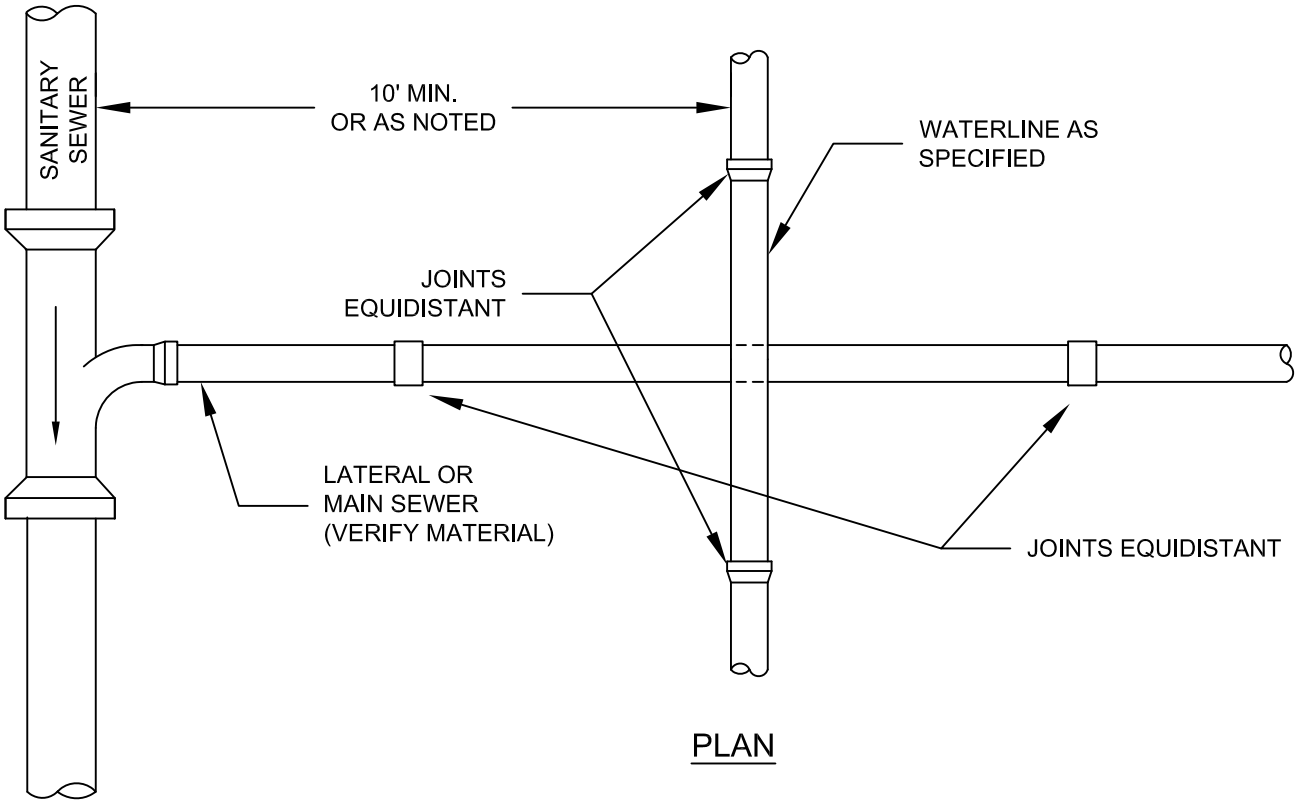

PLAN

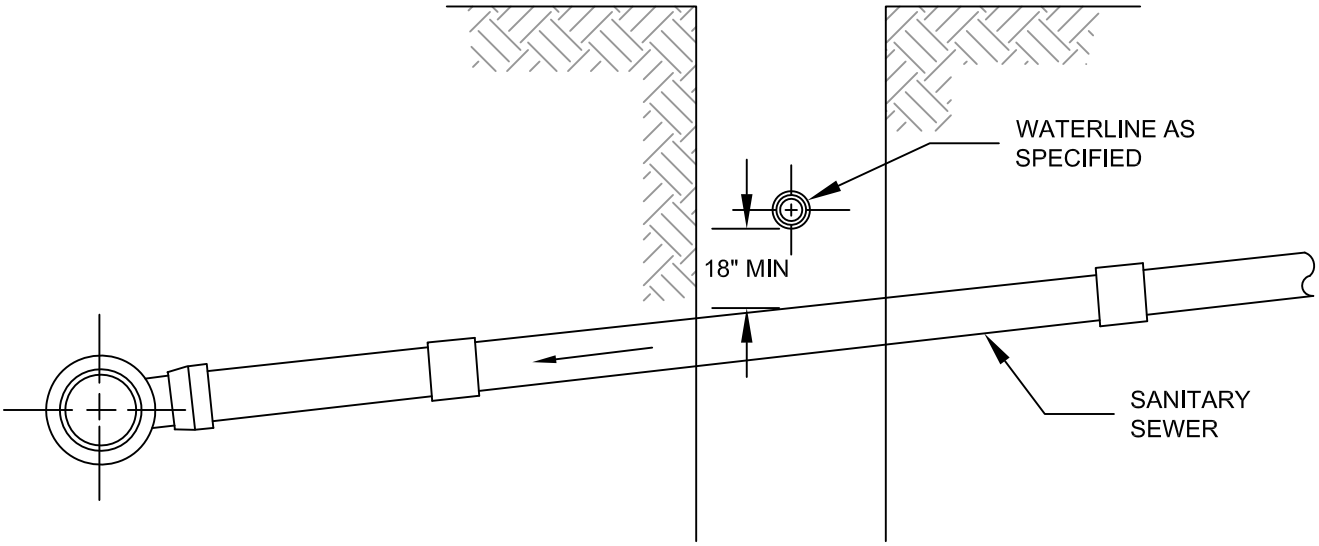

WHEN CONDITIONS SHOWN CANNOT
BE MET, FOLLOW ALL SPECIFICATIONS
AND APPLICABLE REGULATIONS

SECTION

Bedford Regional Water Authority

No.	Date
1	August 20, 2012
2	October 6, 2017
3	
4	

WATER - SANITARY SEWER
CROSSING DETAIL

Detail:

HC-1

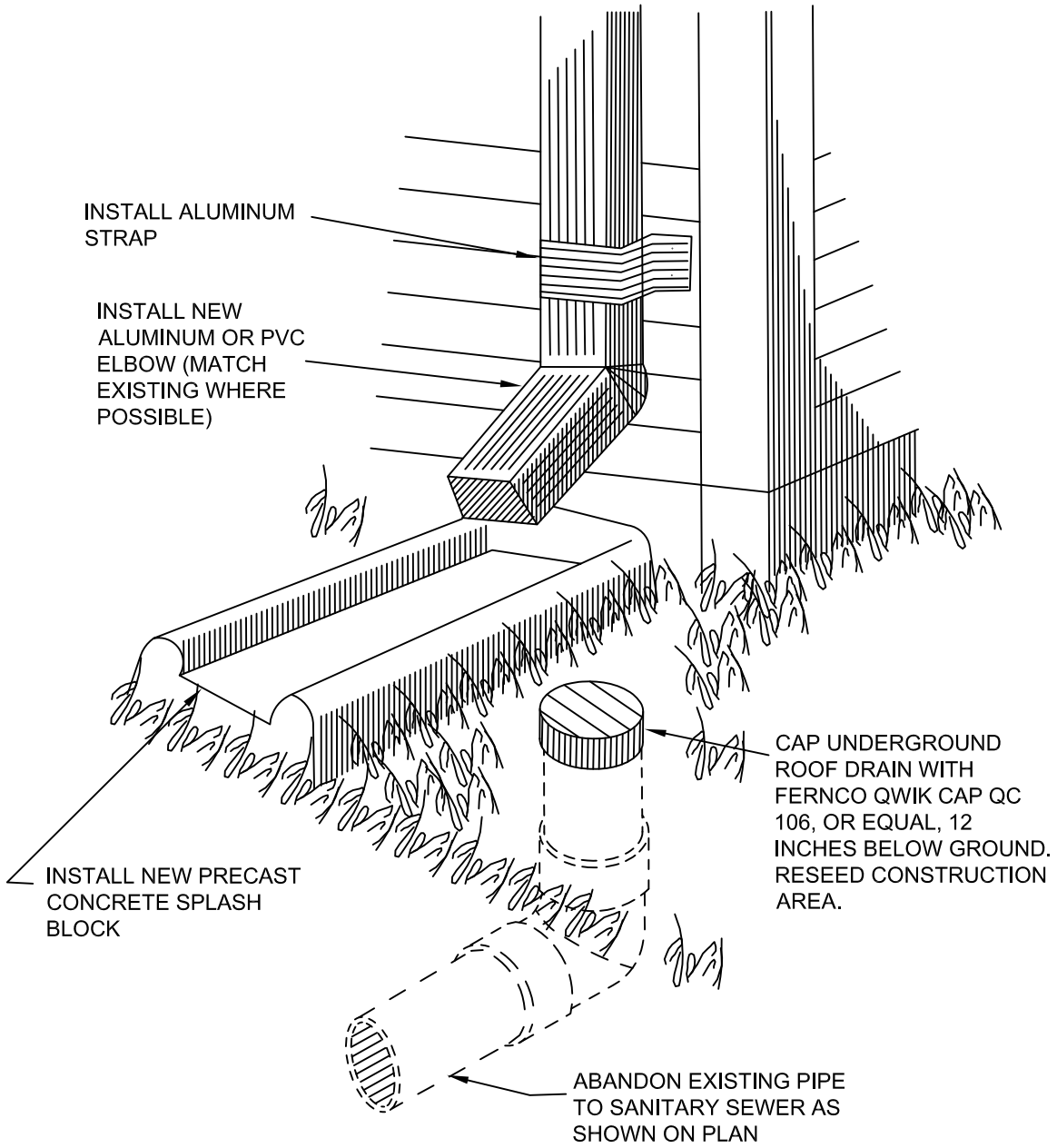

MINIMUM GAUGES AND SIZES FOR GUTTER					
GIRTH (INCHES)	GALVANIZED STEEL (GAUGE)	COPPER (OZ.)	ALUMINUM (INCHES)	STAINLESS STEEL (GAUGE)	PVC (SCH.)
UP TO 15	26	16	0.025	26	40
16 TO 20	24	16	0.032	26	40
21 TO 25	22	20	0.051	24	40

Bedford Regional Water Authority

No.	Date
1	August 20, 2012
2	October 6, 2017
3	
4	

SANITARY SEWER
ROOF DRAIN DISCONNECTION

Detail:
HC-2

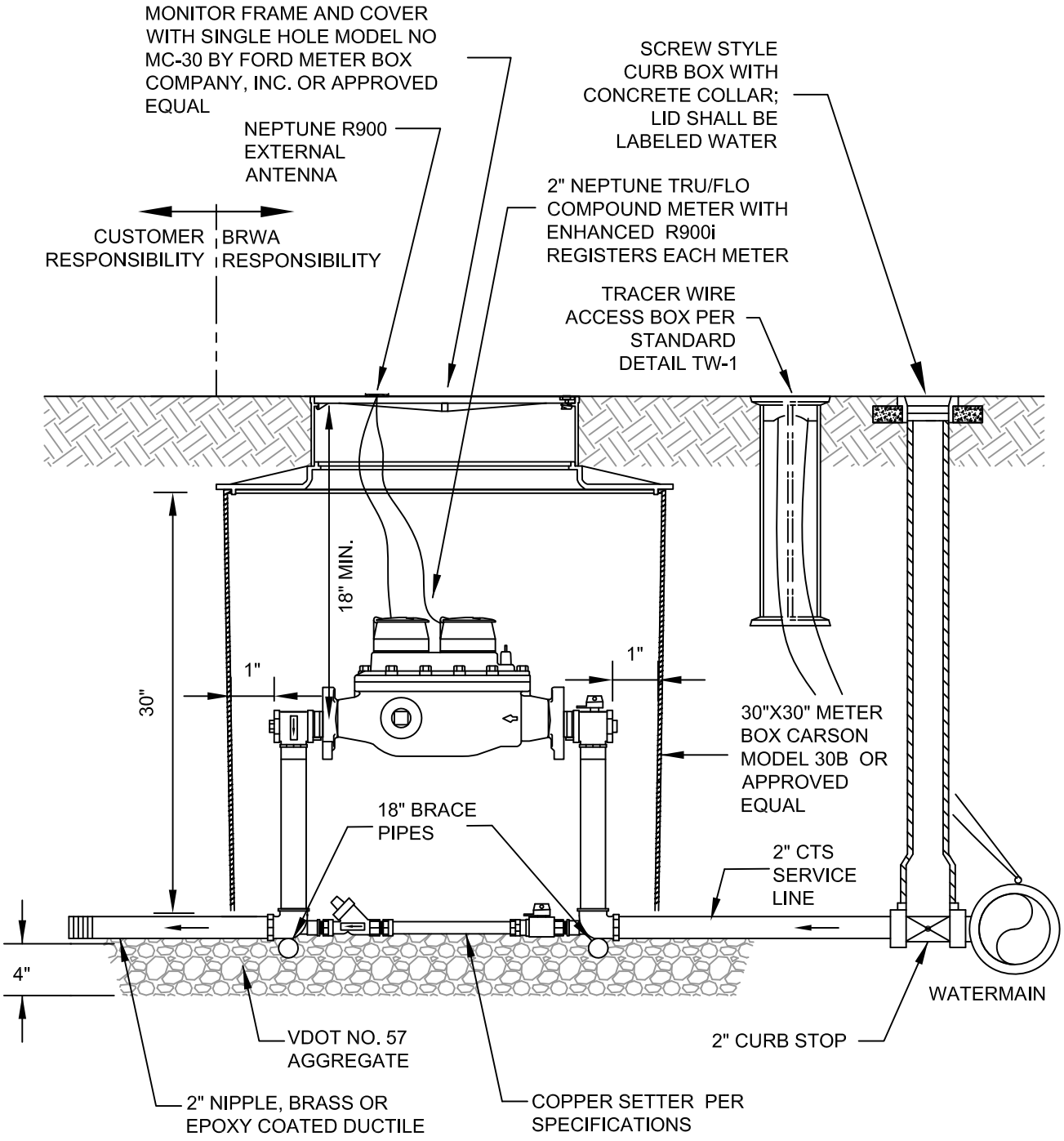

Bedford Regional Water Authority

No.	Date
1	August 20, 2012
2	October 6, 2017
3	
4	

LARGE SERVICE
METER INSTALLATION
(2-INCH)

Detail:

M-1

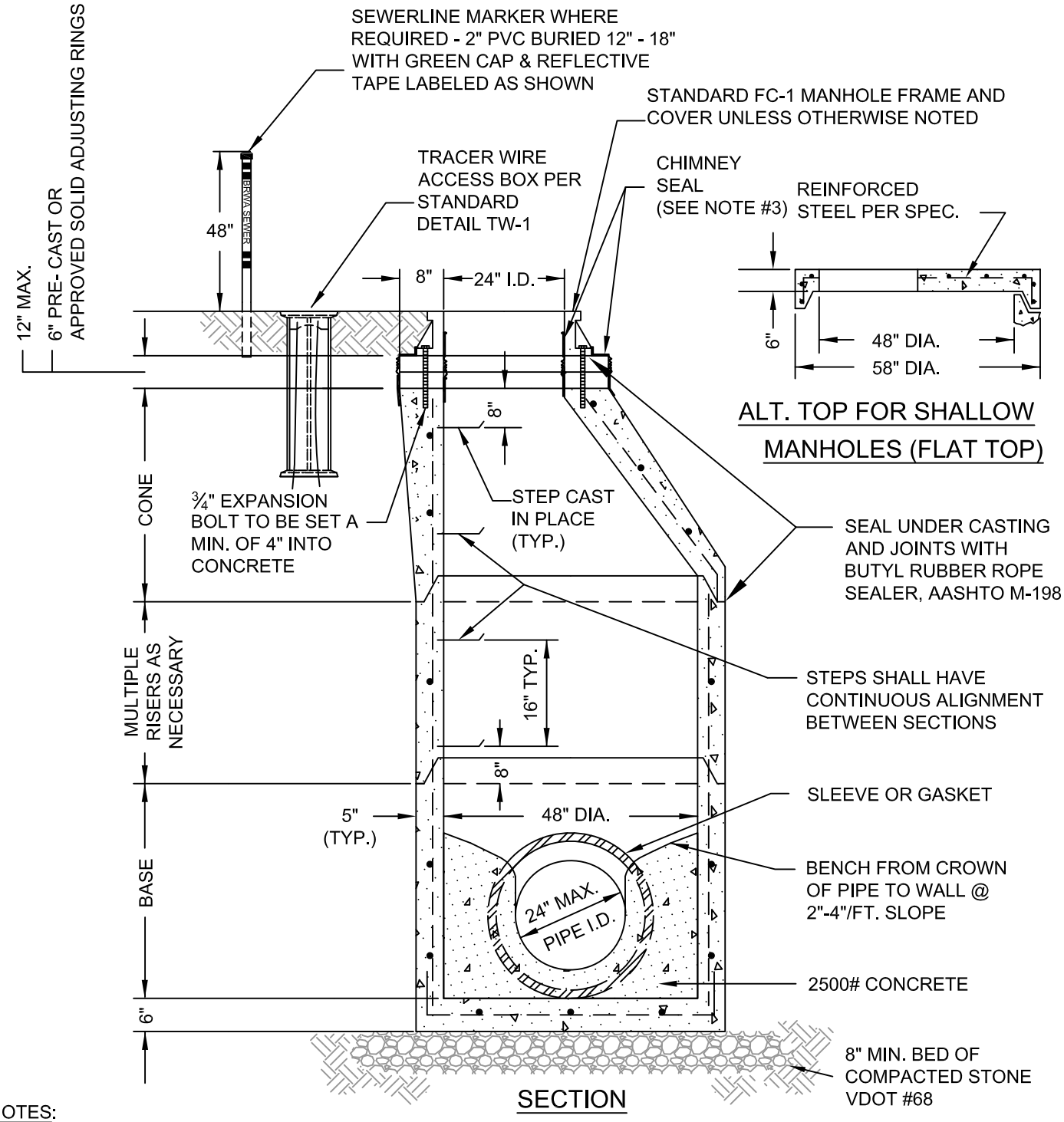

NOTES:

1. MATERIALS AND FABRICATION IN ACCORDANCE WITH ASTM C478. CONE SHALL BE OF THE ECCENTRIC TYPE.
2. CONNECT PIPE TO SECTION WITH APPROVED FLEXIBLE WATER-TIGHT SLEEVE OR GASKET (INTERPACE OR EQUAL). THE FLEXIBLE WATER-TIGHT SLEEVE OR GASKET SHALL BE INSTALLED PER THE MANUFACTURER'S RECOMMENDATIONS.
3. ALL MANHOLES WITH CONCRETE GRADE ADJUSTMENT RINGS SHALL UTILIZE AN EXTERNAL CHIMNEY SEAL PER ASTM C-923 SIMILAR TO CRETEX, NPC FLEXRIB OR APPROVED EQUAL. INTERNAL CHIMNEY SEALS SHALL BE USED WHEN GRADE ADJUSTMENT RINGS ARE NOT INSTALLED OR WHERE OTHERWISE REQUIRED. WHERE REQUIRED, MANHOLE JOINT SEALS PER ASTM C-877 SHALL BE UTILIZED AT ALL JOINTS.

Bedford Regional Water Authority

No.	Date
1	August 20, 2012
2	October 6, 2017
3	
4	

SANITARY SEWER
PRECAST STANDARD MANHOLE
(ECCENTRIC WITH MONOLITHIC BASE)

Detail: **MH-1**

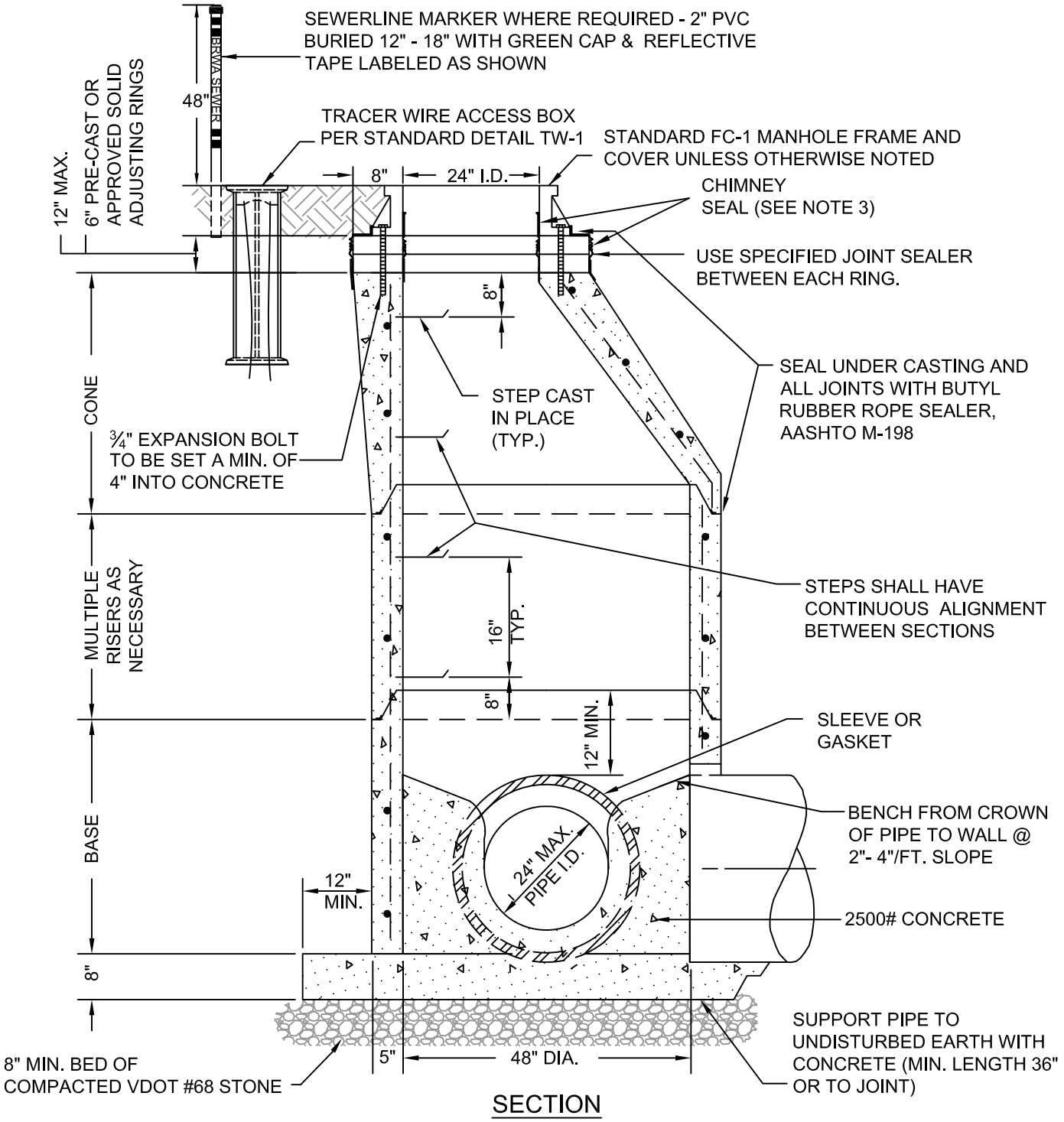

SECTION

NOTES:

1. MATERIALS AND FABRICATION IN ACCORDANCE WITH ASTM C478, CONE WILL BE OF THE ECCENTRIC TYPE.
2. GROUT PIPE INTO MANHOLE WALL.
3. ALL MANHOLES WITH CONCRETE GRADE ADJUSTMENT RINGS SHALL UTILIZE AN EXTERNAL CHIMNEY SEAL PER ASTM C-923 SIMILAR TO CRETEX, NPC FLEXRIB OR APPROVED EQUAL. INTERNAL CHIMNEY SEALS SHALL BE USED WHERE GRADE ADJUSTMENT RINGS ARE NOT INSTALLED OR WHERE OTHERWISE APPROVED. WHERE REQUIRED, MANHOLE JOINT SEALS PER ASTM C-877 SHALL BE UTILIZED AT ALL JOINTS.

Bedford Regional Water Authority

No.	Date
1	August 20, 2012
2	October 6, 2017
3	
4	

PRECAST CONCRETE MANHOLE
(FOR USE ON EXISTING LINES)

Detail:

MH-2

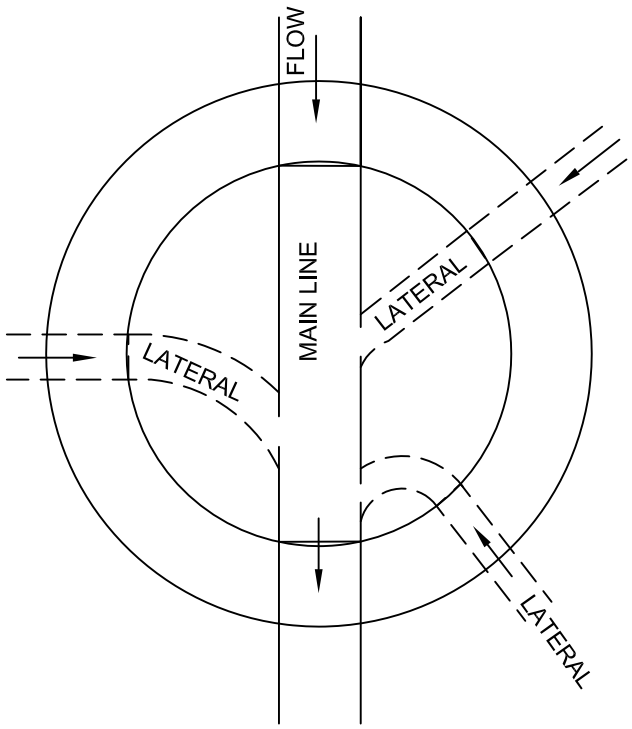

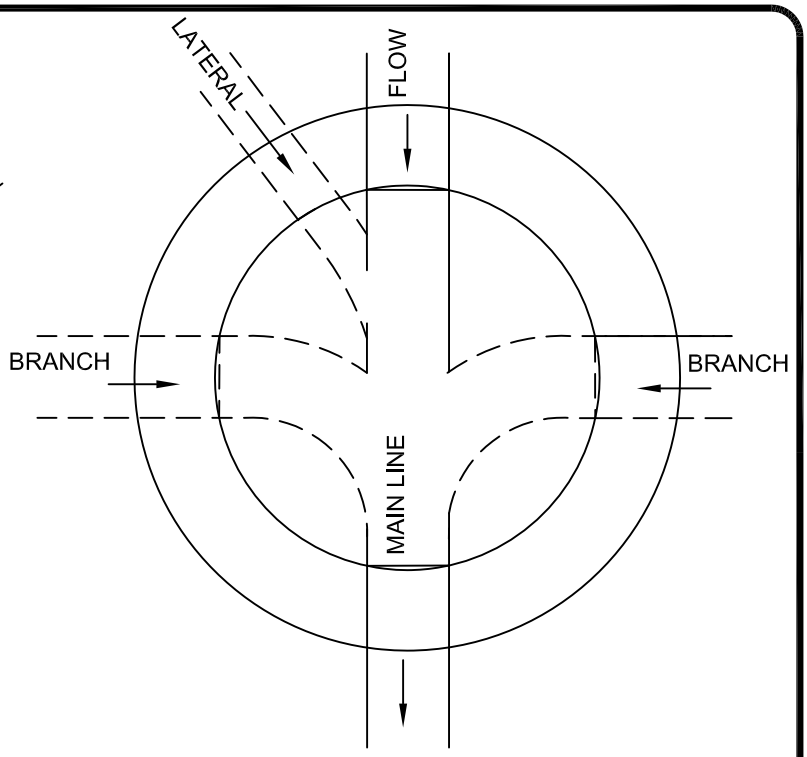

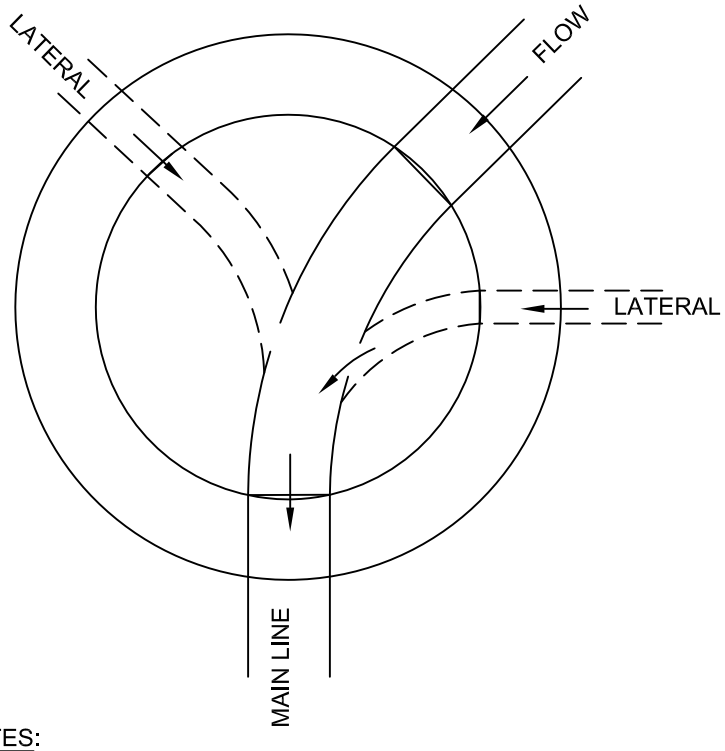

NOTES:

1. THE INVERT CHANNELS SHALL BE FORMED WITH CONCRETE AS SHOWN AND SHALL BE SMOOTH AND SEMI-CIRCULAR IN SHAPE, CONFORMING TO THE INSIDE OF THE ADJACENT SEWER SECTION. CHANGES IN THE DIRECTION OF FLOW SHALL BE MADE WITH A SMOOTH CURVE OF AS LARGE A RADIUS AS SIZE OF MANHOLE WILL PERMIT. SEE SPECIFICATIONS FOR FURTHER DETAIL.
2. A MAXIMUM OF TWO SERVICE LATERALS OR FOUR TOTAL CONNECTIONS WILL BE PERMITTED AT ANY MANHOLE

Bedford Regional Water Authority

No.	Date
1	August 20, 2012
2	October 6, 2017
3	
4	

MANHOLE INVERT CHANNELING

Detail:

MH-3

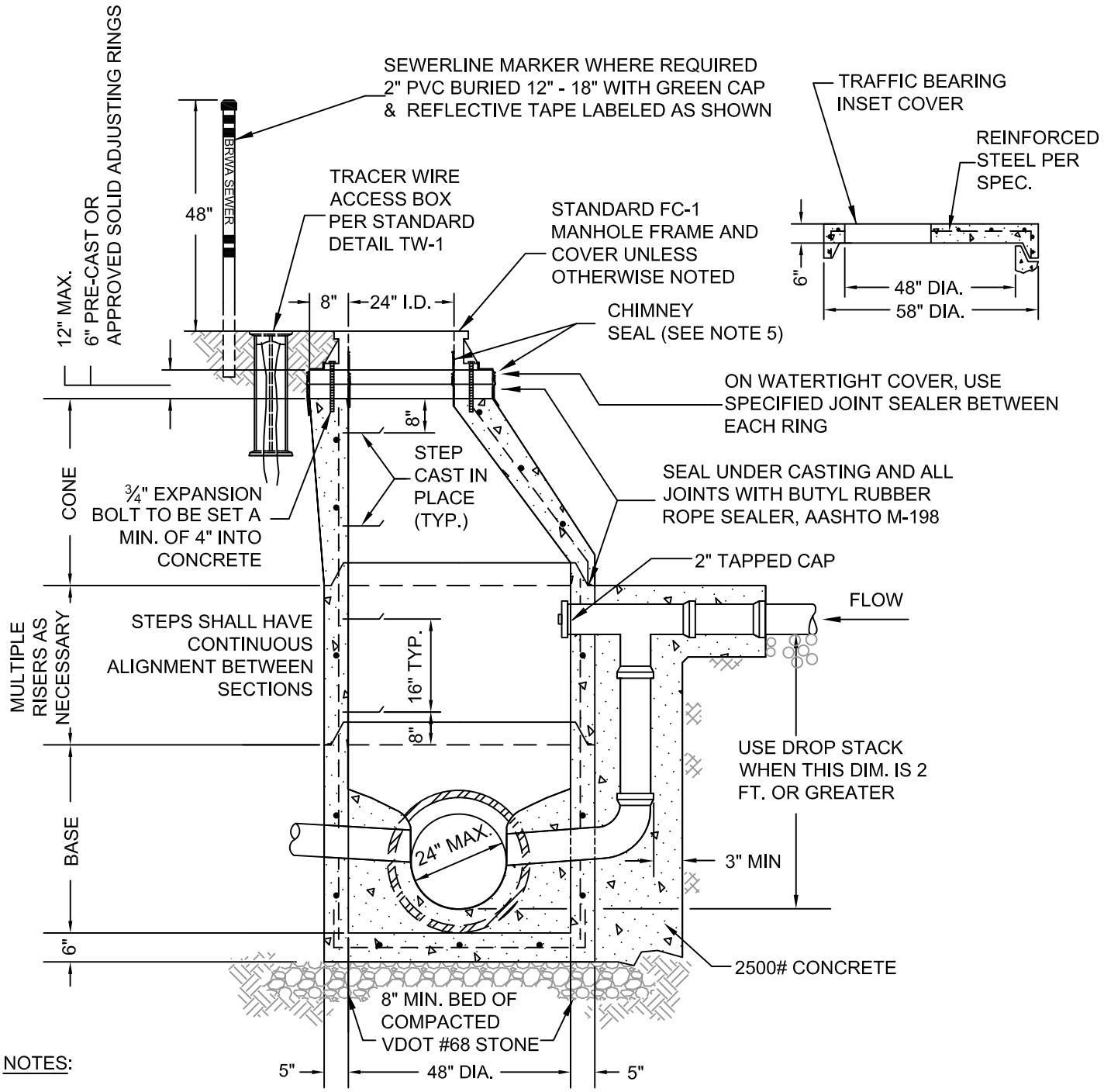

NOTES:

1. USE OF EXTERNAL DROP MANHOLE REQUIRES PRIOR WRITTEN APPROVAL.
2. MATERIALS AND FABRICATION SHALL BE IN ACCORDANCE WITH ASTM C478. CONE SHALL BE OF THE ECCENTRIC TYPE.
3. FOR NEW LINES, CONNECT PIPE TO SECTION WITH APPROVED FLEXIBLE WATER-TIGHT SLEEVE OR GASKET. THE FLEXIBLE WATER-TIGHT SLEEVE OR GASKET SHALL BE INSTALLED PER THE MANUFACTURER'S RECOMMENDATIONS.
4. RESTRAINED JOINT DUCTILE IRON PIPE PER SPECIFICATIONS SHALL BE USED FOR EXTERNAL DROP STACK.
5. ALL MANHOLES WITH CONCRETE GRADE ADJUSTMENT RINGS SHALL UTILIZE AN EXTERNAL CHIMNEY SEAL PER ASTM C-923 SIMILAR TO CRETEX, NPC FLEXRIB OR APPROVED EQUAL. INTERNAL CHIMNEY SEALS SHALL BE USED WHEN GRADE ADJUSTMENT RINGS ARE NOT INSTALLED OR WHERE OTHERWISE APPROVED. WHERE REQUIRED, MANHOLE JOINT SEALS PER ASTM C-877 SHALL BE INSTALLED AT ALL JOINTS.

Bedford Regional Water Authority

No.	Date
1	August 20, 2012
2	October 6, 2017
3	
4	

SANITARY SEWER PRECAST
EXTERNAL DROP MANHOLE
(ECCENTRIC WITH MONOLITHIC BASE)

Detail:

MH-4

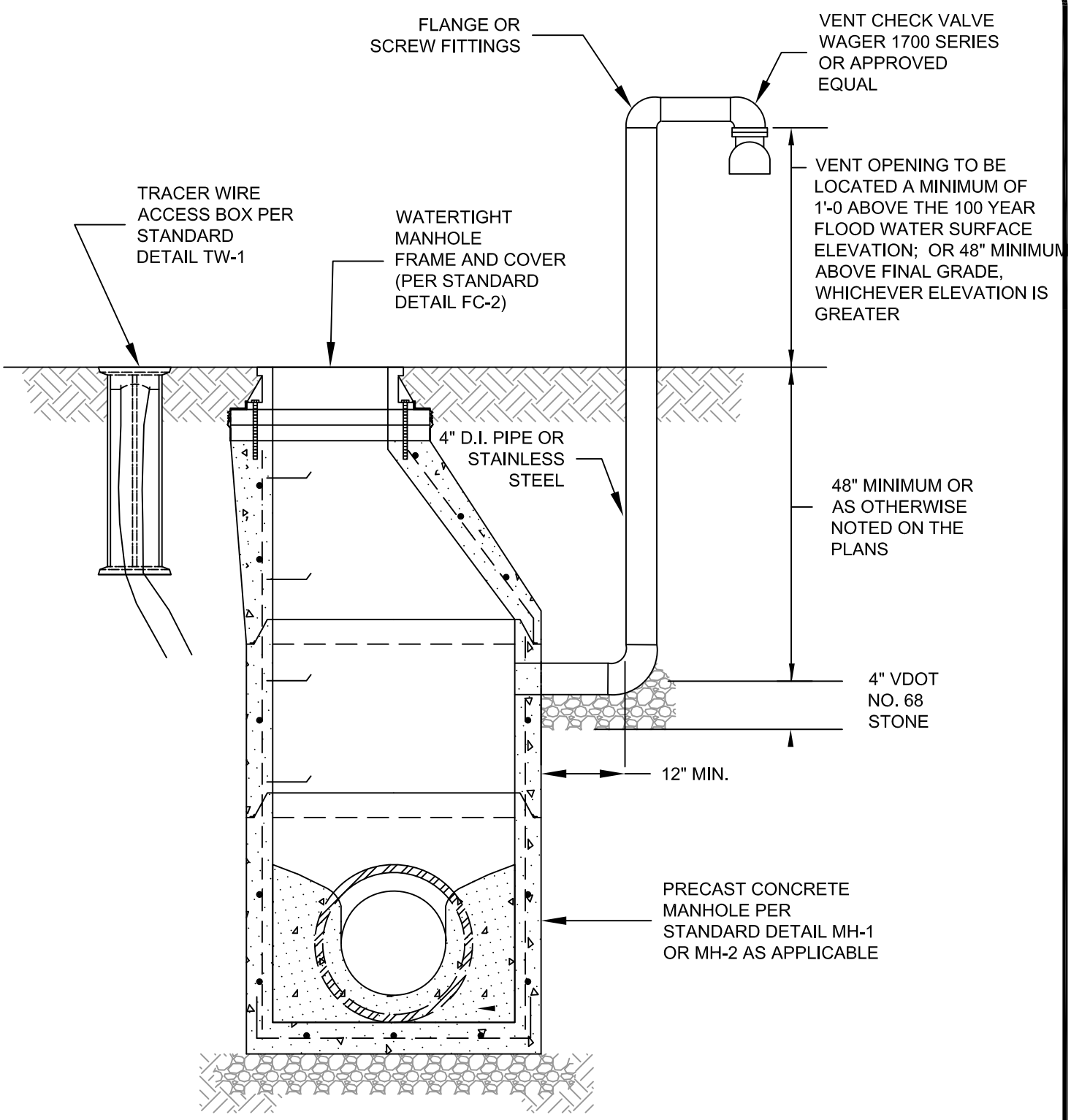

NOTE: CONNECT PIPE TO SECTION WITH
APPROVED FLEXIBLE WATERTIGHT SLEEVE
OR GASKET (INTERPACE OR EQUAL)

Bedford Regional Water Authority

No.	Date
1	August 20, 2012
2	October 6, 2017
3	
4	

SANITARY SEWER
MANHOLE VENTILATION

Detail:

MH-5

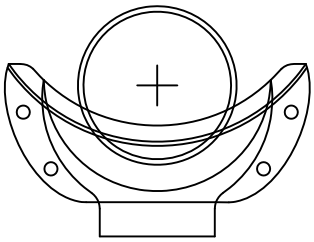

DROP BOWL MOUNTING POSITION

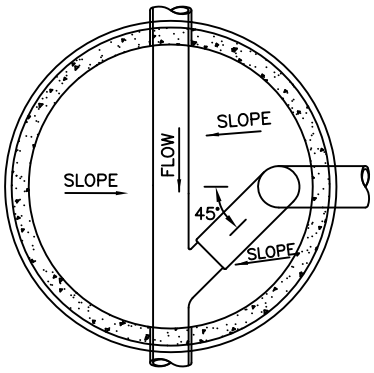

INSIDE DROP - PLAN

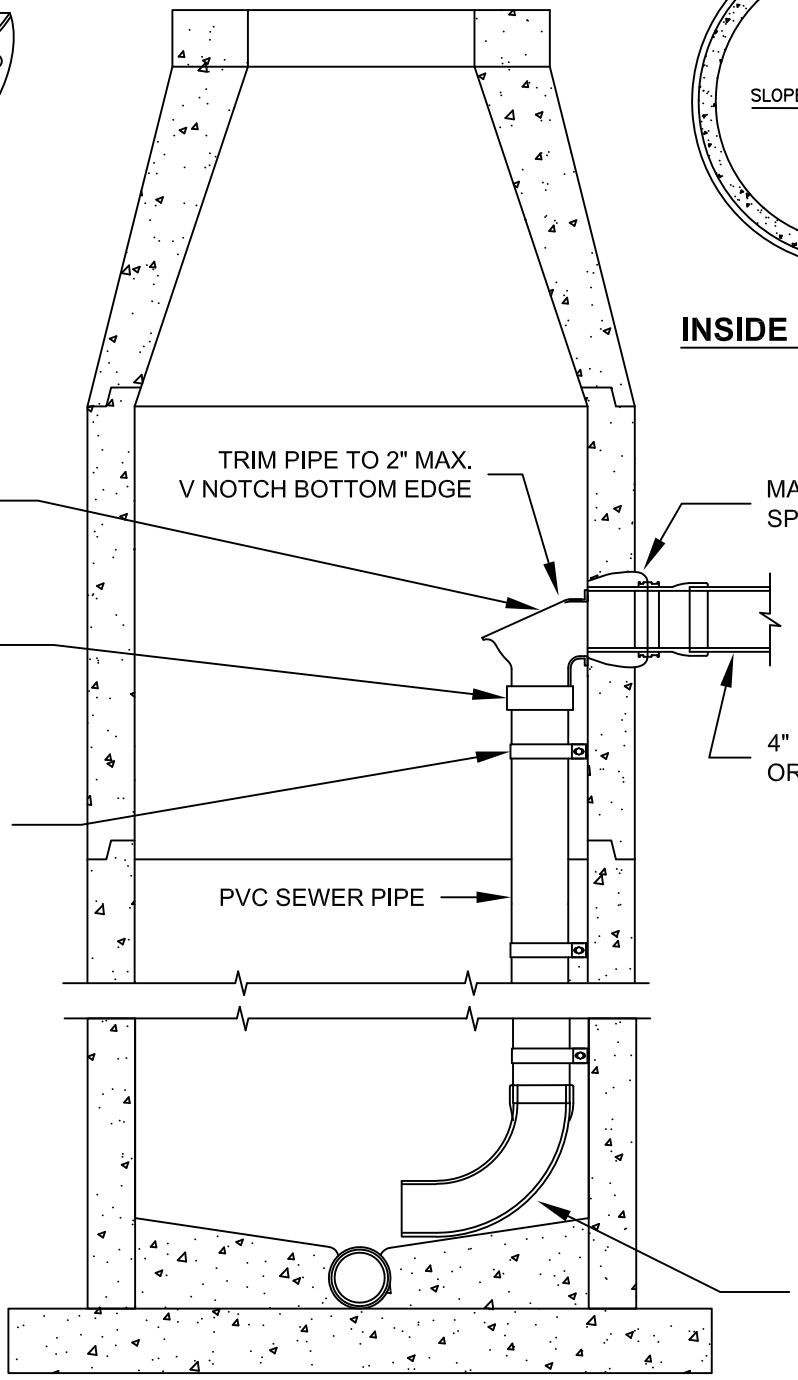

NOTES:

1. ALL INSIDE DROP CONNECTIONS FOR SERVICES AND COLLECTOR SEWERS SHALL USE THE DROP BOWL BY RELINER-DURAN, INC., 53 MT. ARCHER RD, LYME, CT 06371, (800) 508-6001, OR APPROVED EQUAL.
2. INSIDE DROP CONNECTIONS SHALL ONLY BE USED WHERE APPROVED BY THE AUTHORITY. MINIMUM MANHOLE DIAMETERS FOR MANHOLES RECEIVING A SINGLE INSIDE DROP CONNECTION SHALL BE 5'; MANHOLES RECEIVING TWO INSIDE DROP CONNECTIONS SHALL BE A MINIMUM 6' DIAMETER.

Bedford Regional Water Authority

No.	Date
1	August 20, 2012
2	October 6, 2017
3	
4	

INSIDE DROP CONNECTION

Detail: **MH-6**

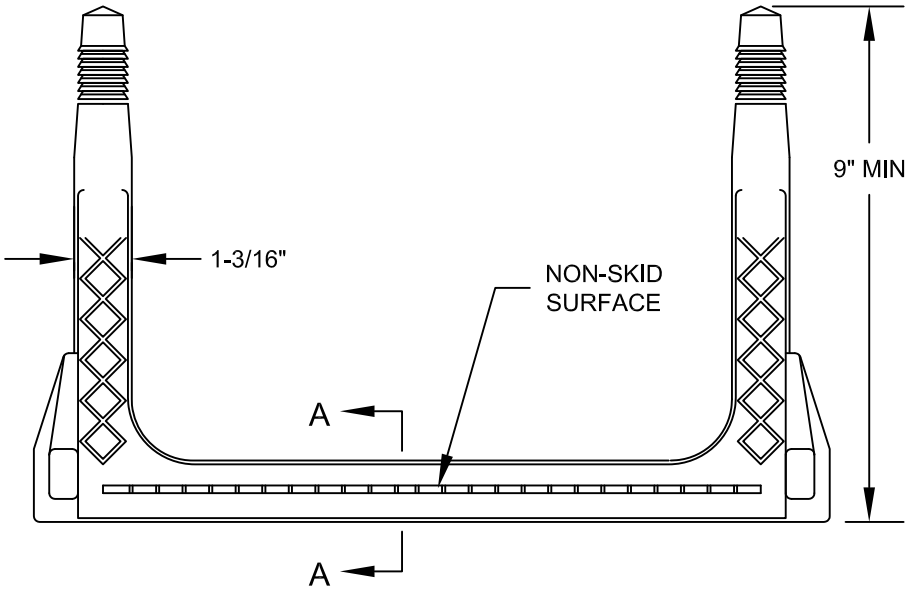

PLAN

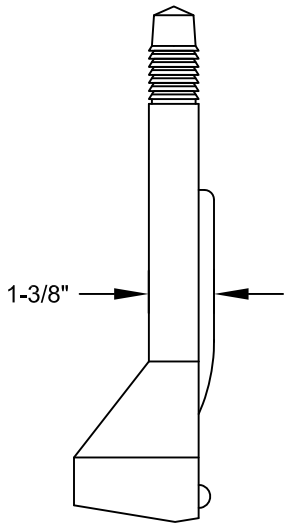

SIDE ELEVATION

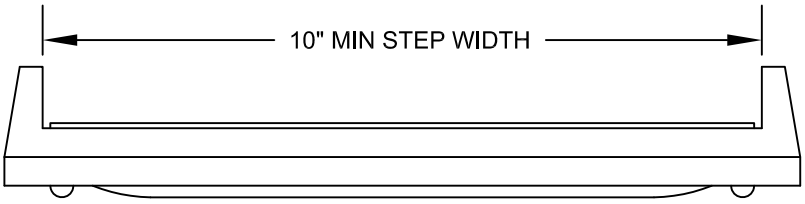

FRONT ELEVATION

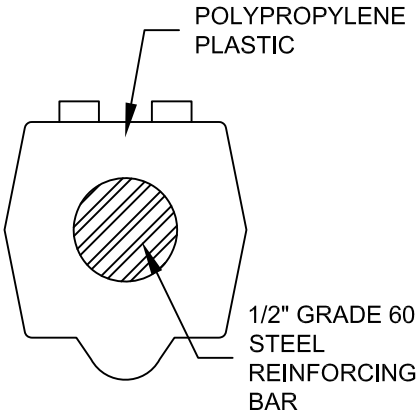

SECTION A-A

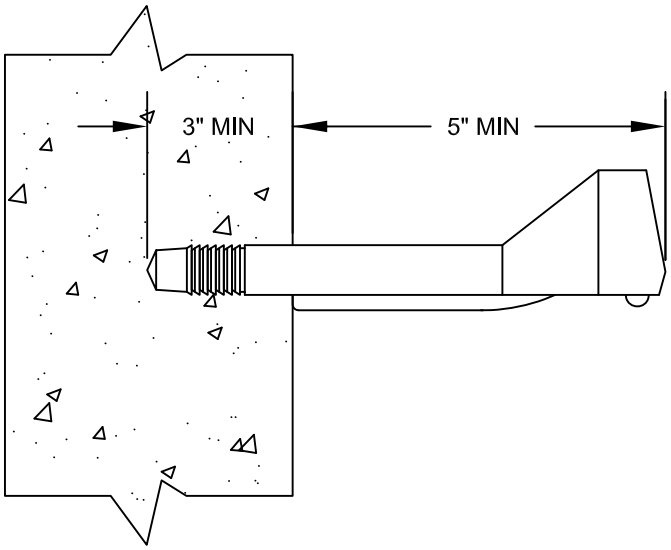

INSTALLATION

NOTES:

1. ALL STEPS MUST CONFORM TO ASTM C-478 AND AASHTO M-199.
2. POLYPROPYLENE SHALL CONFORM TO ASTM D-4101.
3. DEFORMED STEEL REINFORCING BAR SHALL CONFORM TO ASTM A-615.
4. ALL STEPS WITHIN A MANHOLE SHALL BE OF THE SAME SIZE AND DESIGN. MIXING OF UNMATCHED STEPS WITHIN THE SAME MANHOLE WILL NOT BE PERMITTED.

Bedford Regional Water Authority

No.	Date
1	August 20, 2012
2	October 6, 2017
3	
4	

STANDARD MANHOLE STEP

Detail: **MS-1**

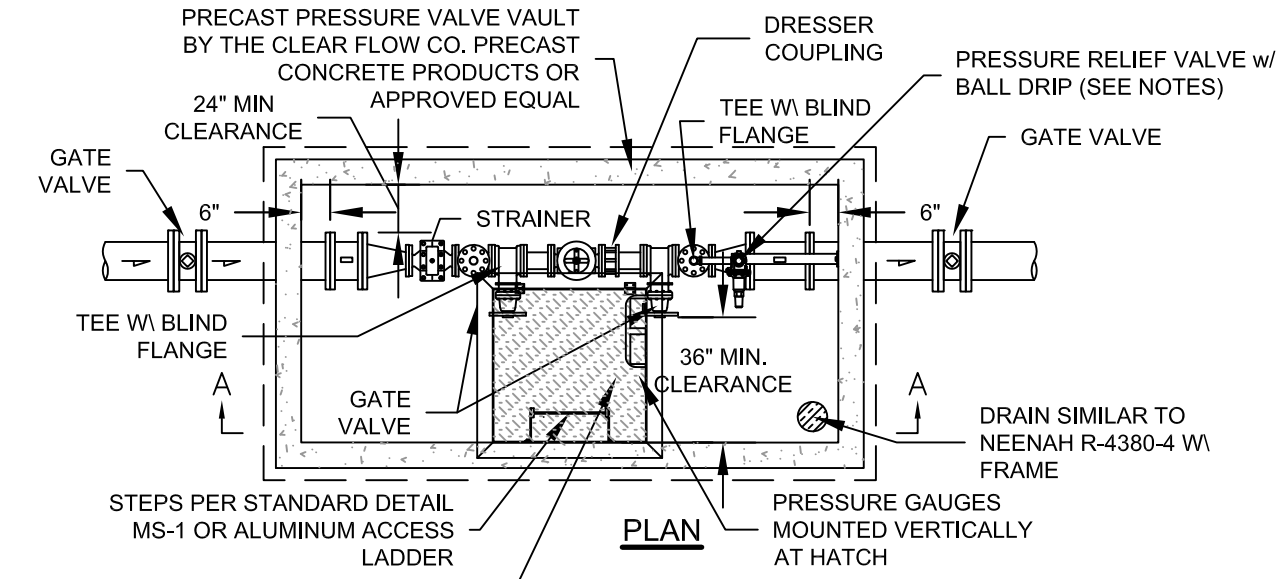

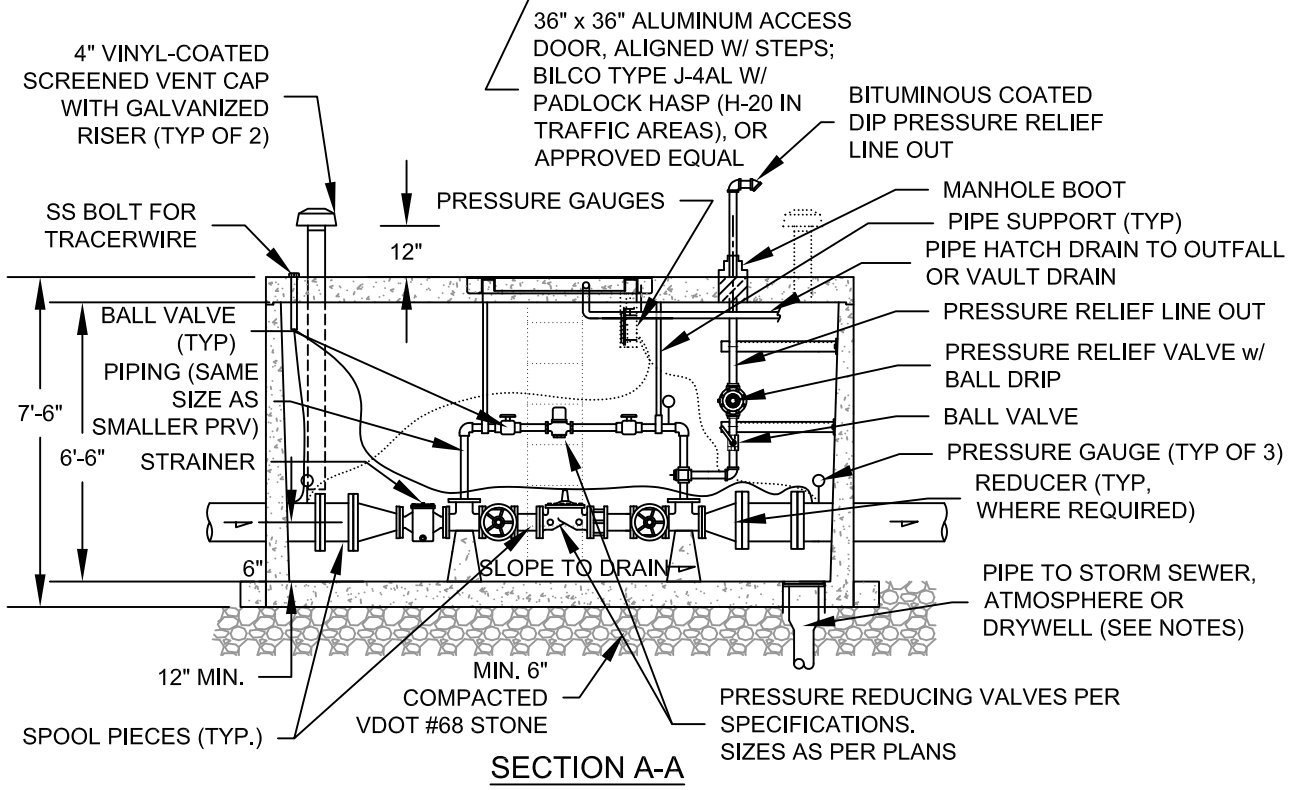

NOTES:

1. ALL PRV VAULTS SHALL INCLUDE A 6-INCH EXTENDED BASE. THE EXTENDED BASE SHALL BE INTEGRALLY CAST WITH THE VAULT AND BE THE SAME DEPTH AS THE BASE OF THE VAULT AND EXTEND OUT FROM THE VAULT WALL 6 INCHES IN ALL DIRECTIONS.
2. INTERNAL PIPING AND VALVE SIZE(S) SHALL CORRESPOND TO THE PRV SIZE(S) BEING SERVED UNLESS STATED OTHERWISE ON PLANS.
3. BYPASS SHALL BE PROVIDED PER STANDARD DETAIL FM-2 WHERE REQUIRED ON THE PLANS.
4. PRESSURE GAUGES w/GAUGE COCK, MOUNTED AT HATCH. PROVIDE ADDITIONAL GAUGES AT PIPE.
5. DRYWELL SHALL BE 4' DIAMETER X 4' DEEP VDOT #57 STONE WRAPPED WITH MIRAFIN-SERIES NONWOVEN POLYPROPYLENE GEOTEXTILE.
6. PRESSURE RELIEF VALVE PER SPECIFICATIONS IS REQUIRED DOWNSTREAM OF PRV. INSTALLATION MAY BE INTERNAL OR EXTERNAL PER STANDARD DETAIL RV-3 UNLESS OTHERWISE REQUIRED ON THE PLANS.

Bedford Regional Water Authority

No.	Date
1	August 20, 2012
2	October 6, 2017
3	December 12, 2017
4	

PRESSURE REDUCING VALVE
WITH LOW FLOW BYPASS
(FOR P.R.V.'S 3" AND LARGER)

Detail:

RV-1

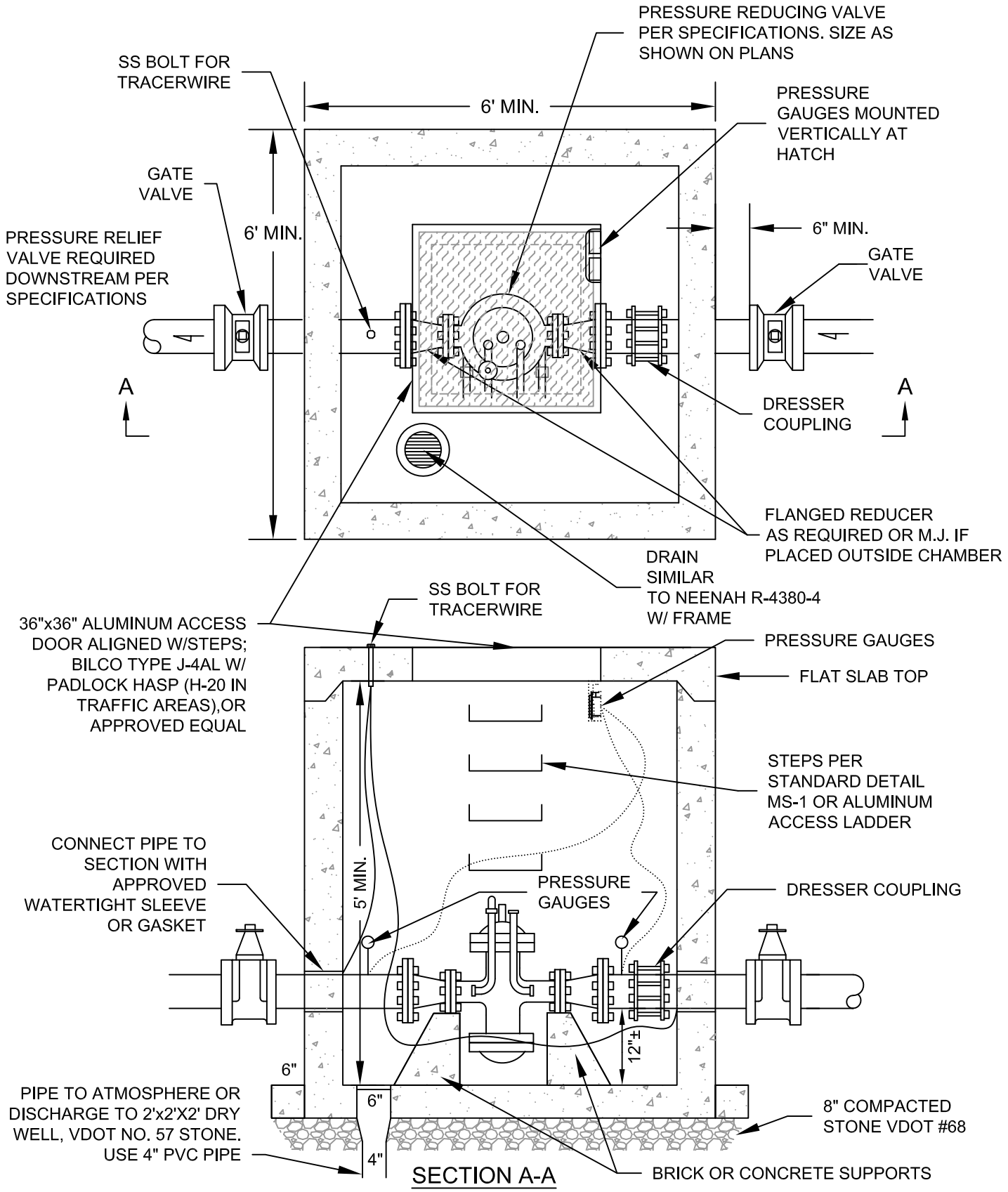

Bedford Regional Water Authority

No.	Date
1	August 20, 2012
2	October 6, 2017
3	December 12, 2017
4	

PRESSURE REDUCING VALVE
(FOR P.R.V.'S SMALLER THAN 3")

Detail:

RV-2

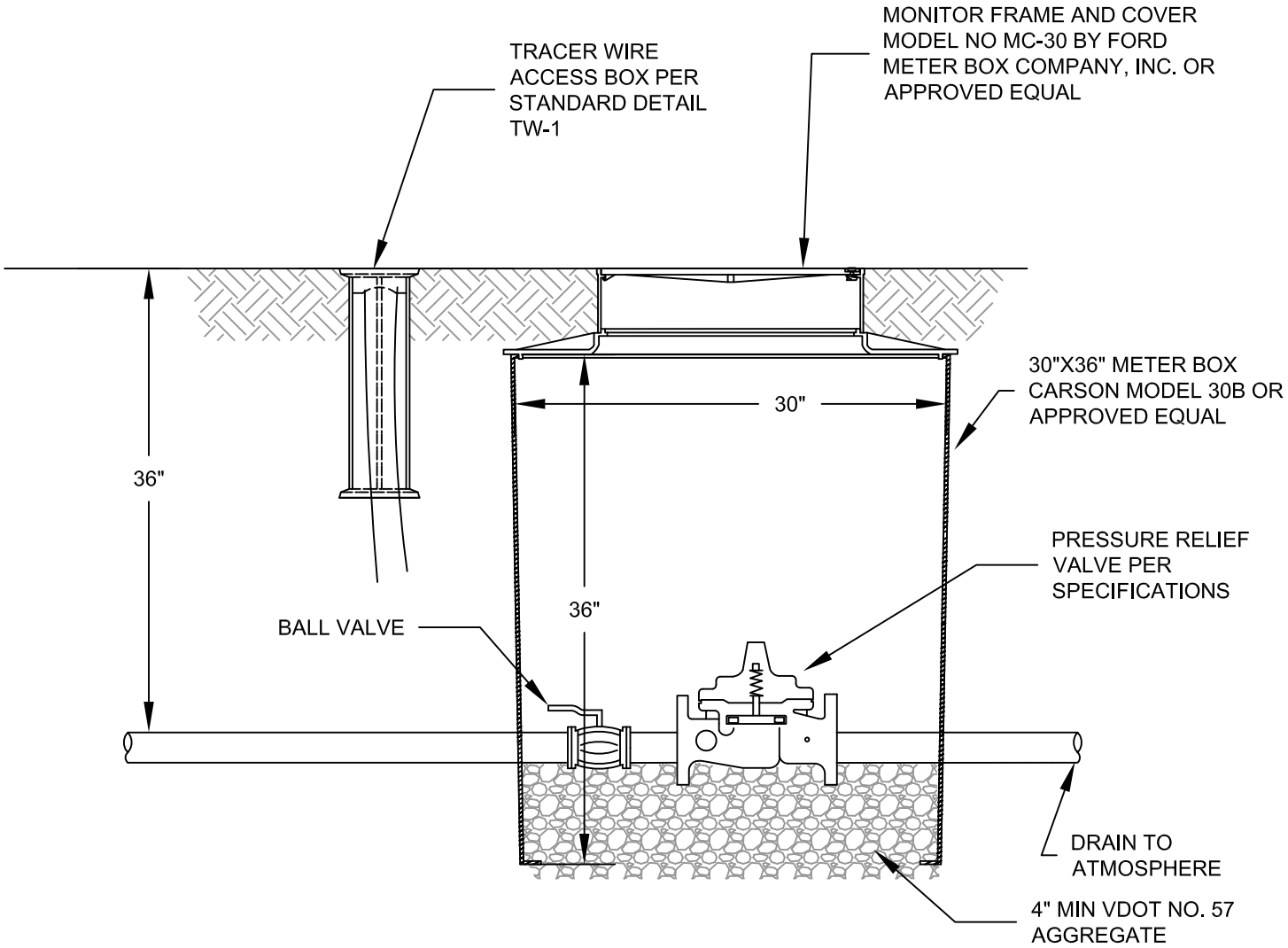

NOTES:
1. SCREEN SHALL BE INSTALLED ON DRAIN OUTLET.
2. PRESSURE RELIEF VALVE SHALL BE INSTALLED DOWNSTREAM OF ALL MAIN LINE PRESSURE REDUCING VALVES.

Bedford Regional Water Authority

No.	Date
1	August 20, 2012
2	October 6, 2017
3	
4	

PRESSURE RELIEF VALVE

Detail: **RV-3**

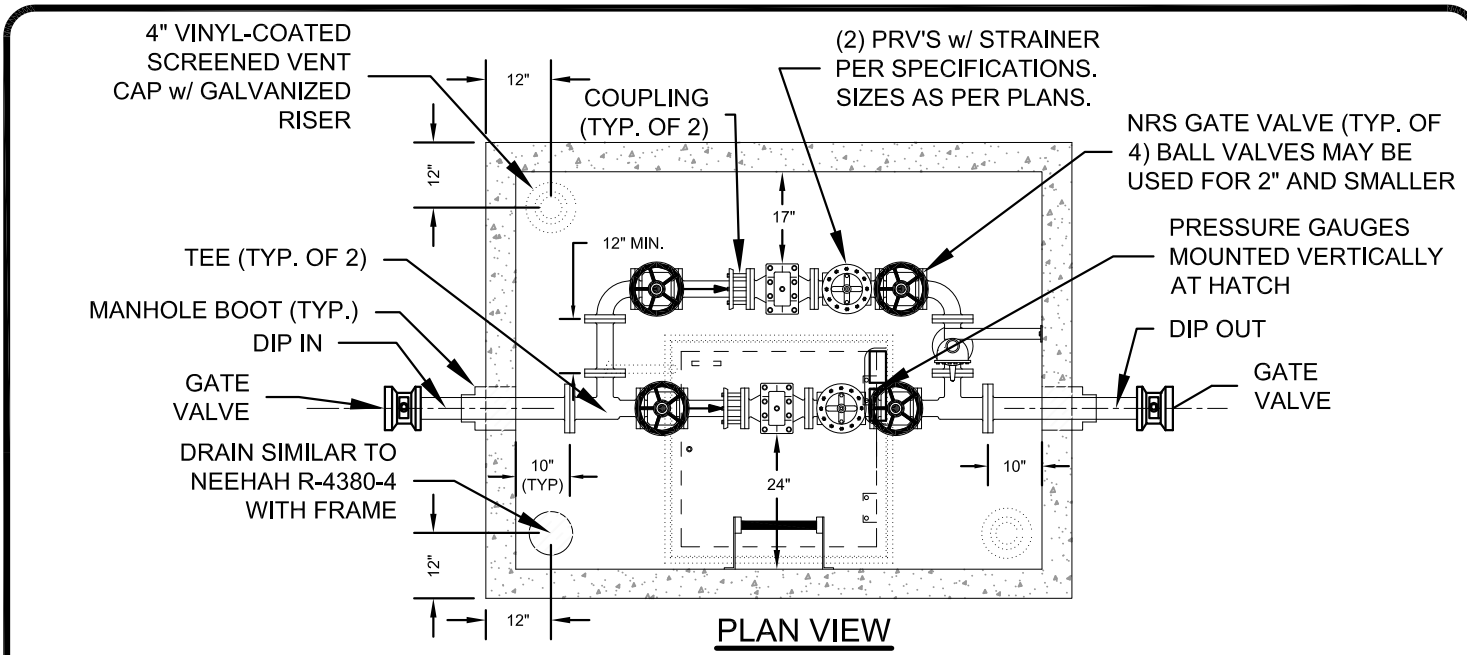

PLAN VIEW

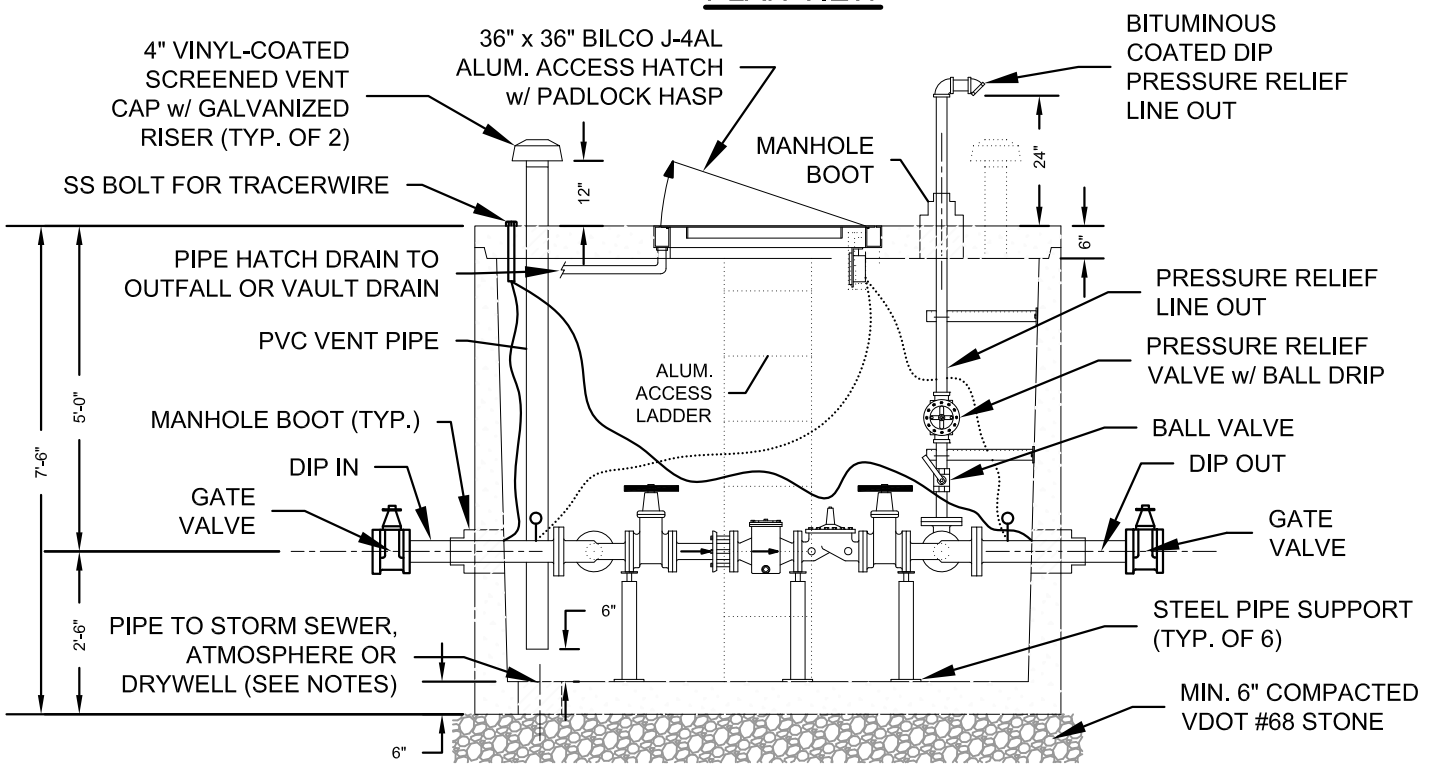

SECTION VIEW

NOTES:

1. ALL PRV VAULTS SHALL INCLUDE A 6-INCH EXTENDED BASE. THE EXTENDED BASE SHALL BE INTEGRALLY CAST WITH THE VAULT AND BE THE SAME DEPTH AS THE BASE OF THE VAULT AND EXTEND OUT FROM THE VAULT WALL 6 INCHES IN ALL DIRECTIONS.
2. ANY REDUCERS TO BE INSTALLED INTERIOR TO THE VAULT.
3. INTERNAL PIPING AND VALVE SIZE(S) SHALL CORRESPOND TO THE PRV SIZE(S) BEING SERVED UNLESS STATED OTHERWISE ON PLANS.
4. PRESSURE GAUGES w/GAUGE COCK, MOUNTED AT HATCH. PROVIDE ADDITIONAL GAUGES AT PIPE.
5. DRYWELL SHALL BE 4' DIAMETER X 4' DEEP VDOT #57 STONE WRAPPED WITH MIRAFIN-SERIES NONWOVEN POLYPROPYLENE GEOTEXTILE.

Bedford Regional Water Authority

No.	Date
1	August 20, 2012
2	October 6, 2017
3	December 12, 2017
4	

PRESSURE REDUCING VALVE VAULT
WITH REDUNDANCY AND INTERNAL RELIEF

Detail:

RV-5

Bedford Regional Water Authority

No.	Date
1	August 20, 2012
2	October 6, 2017
3	
4	

STANDARD ⅝" x ¾", ¾" AND 1" SINGLE WATER SERVICE SONNECTION

Detail: **SC-1**

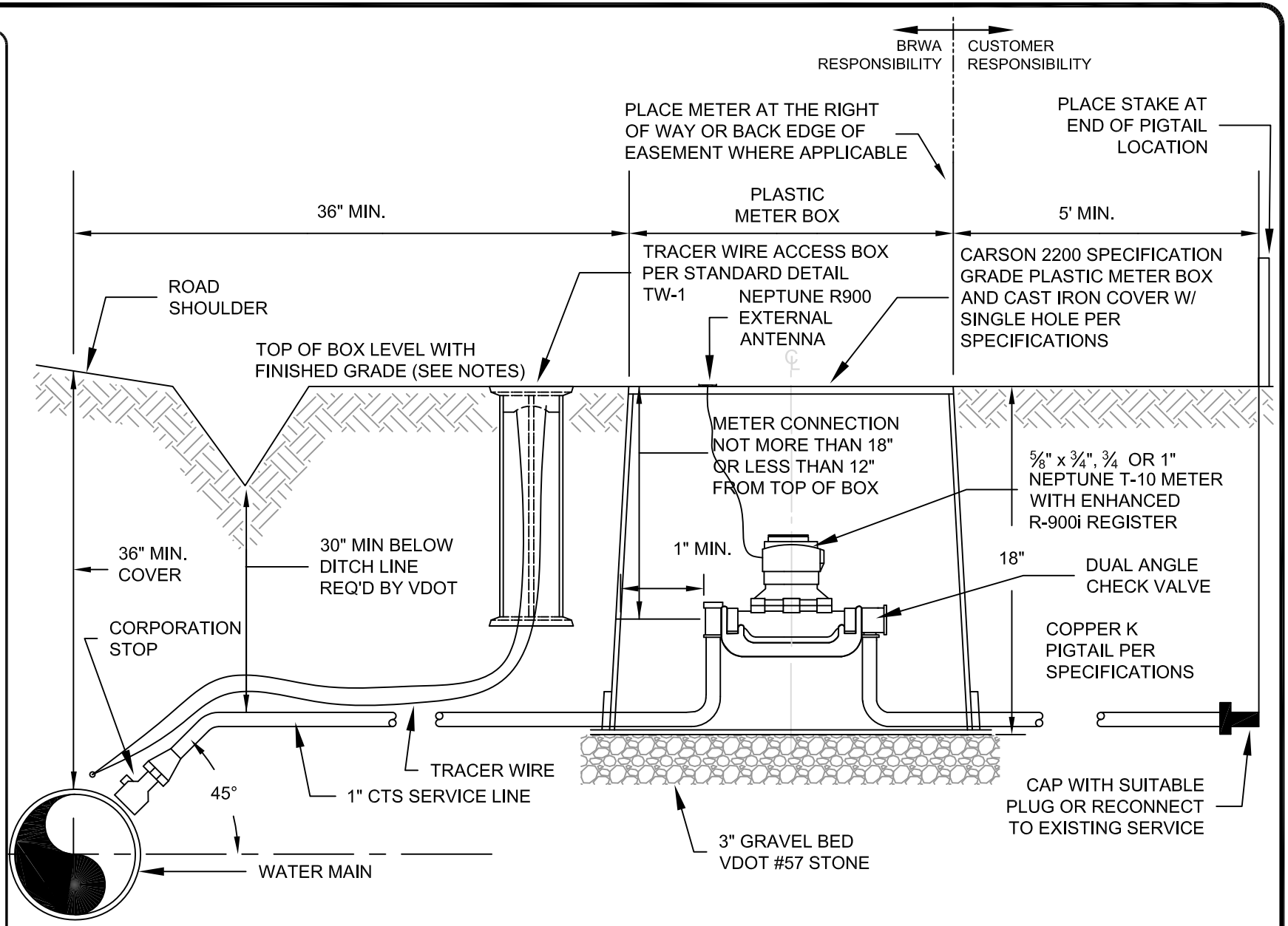

NOTES:

1. IF GROUND HAS NOT BEEN FINISH GRADED, LEAVE BOX 2" ABOVE EXISTING GROUND TO ALLOW FOR FINAL GRADING.
2. 1" SINGLE SERVICES SHALL BE INSTALLED IN A 24"X24" CARSON METER BOX MODEL 24B WITH FORD MONITOR FRAME AND COVER MODEL MC-24 OR APPROVED EQUALS.

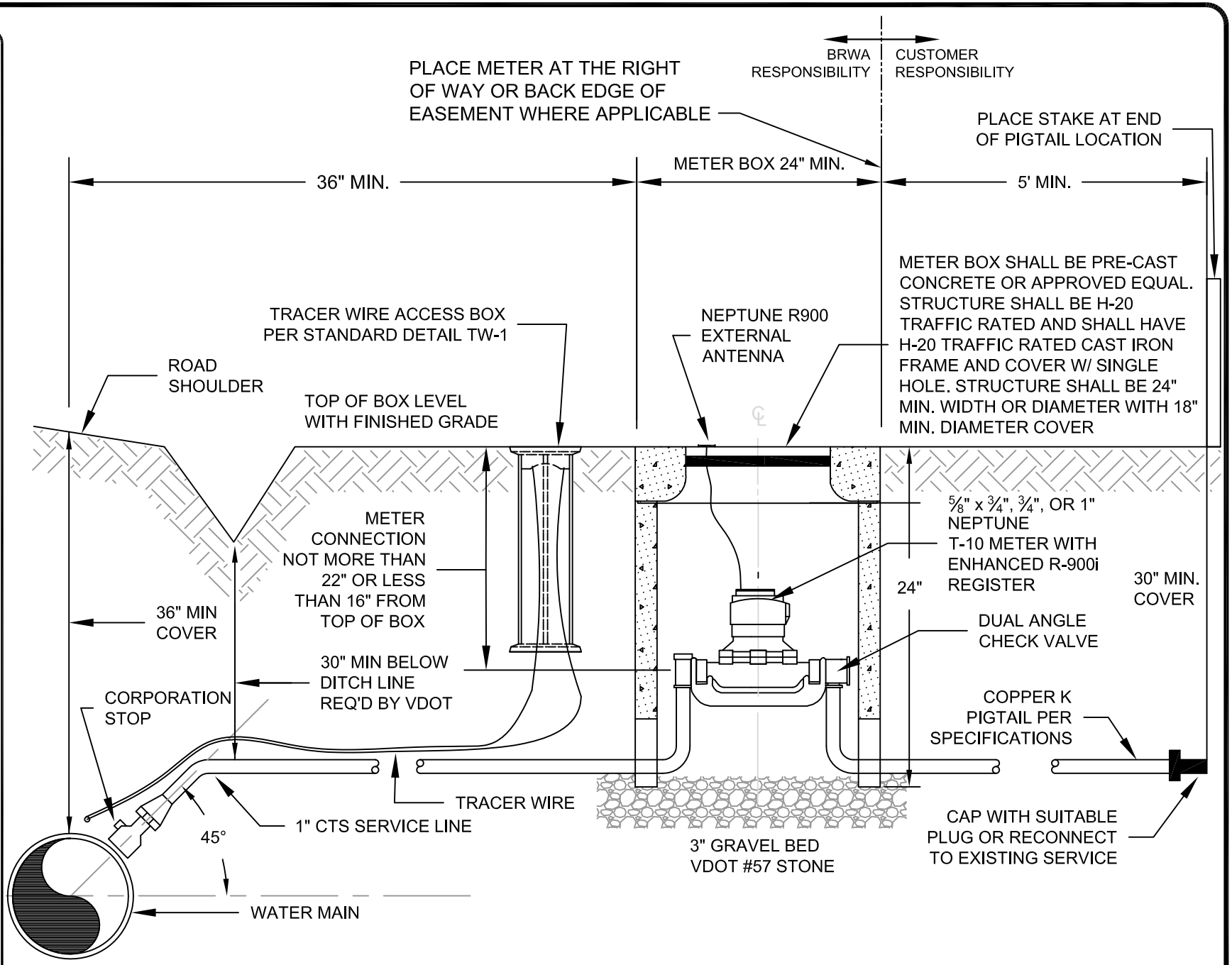

Bedford Regional Water Authority

No.	Date
1	August 20, 2012
2	October 6, 2017
3	
4	

⅝" x ¾", ¾" AND 1"
SINGLE WATER SERVICE CONNECTION
IN TRAFFIC AREAS

Detail:
SC-2

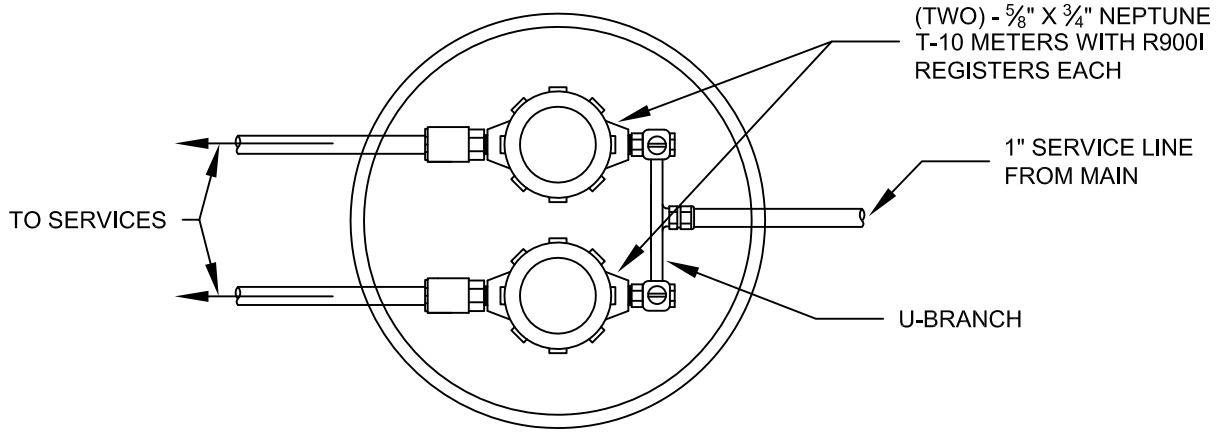

PLAN

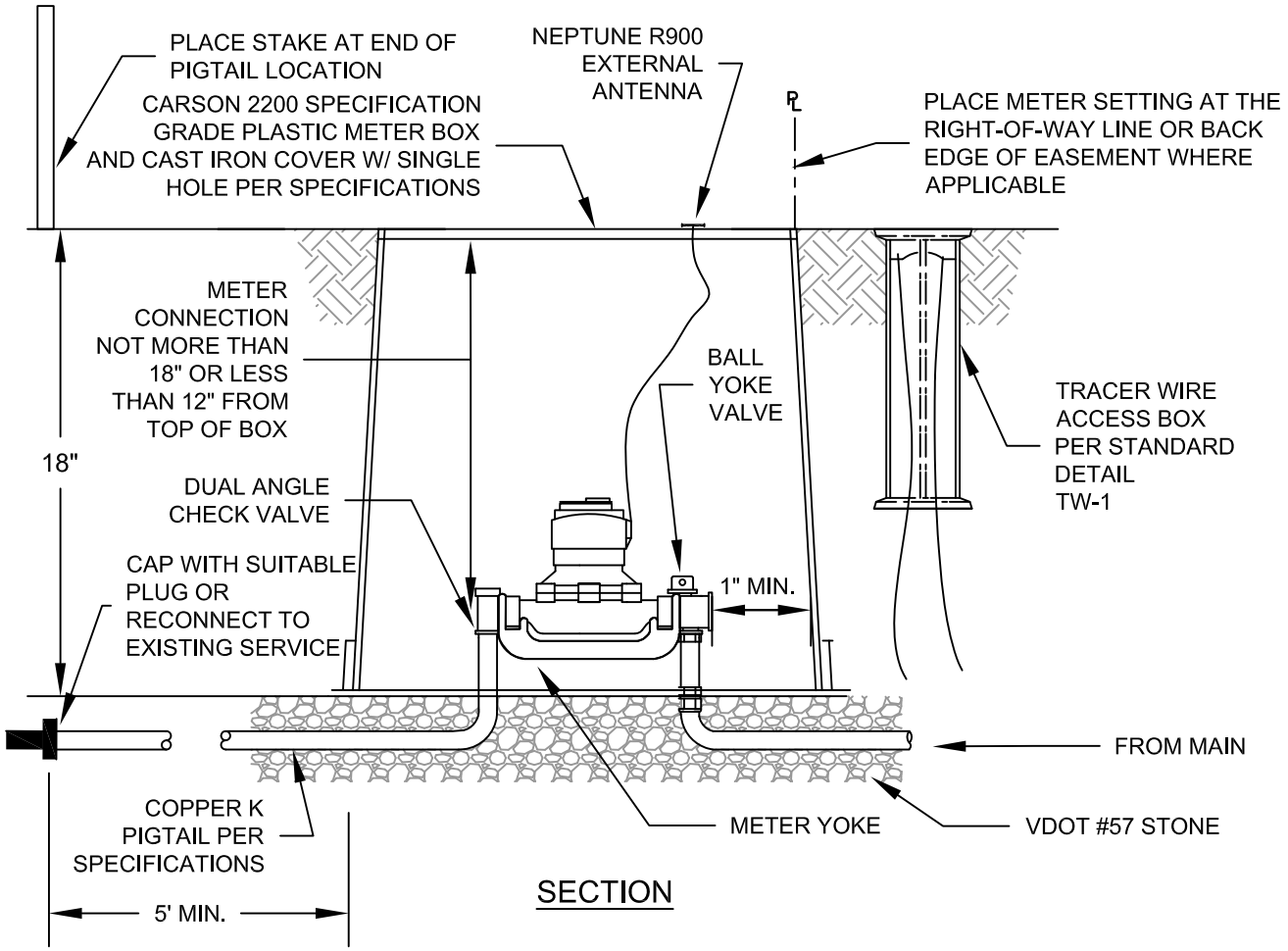

SECTION

Bedford Regional Water Authority

No.	Date
1	August 20, 2012
2	October 6, 2017
3	
4	

DOUBLE METER INSTALLATION

Detail:

SC-3

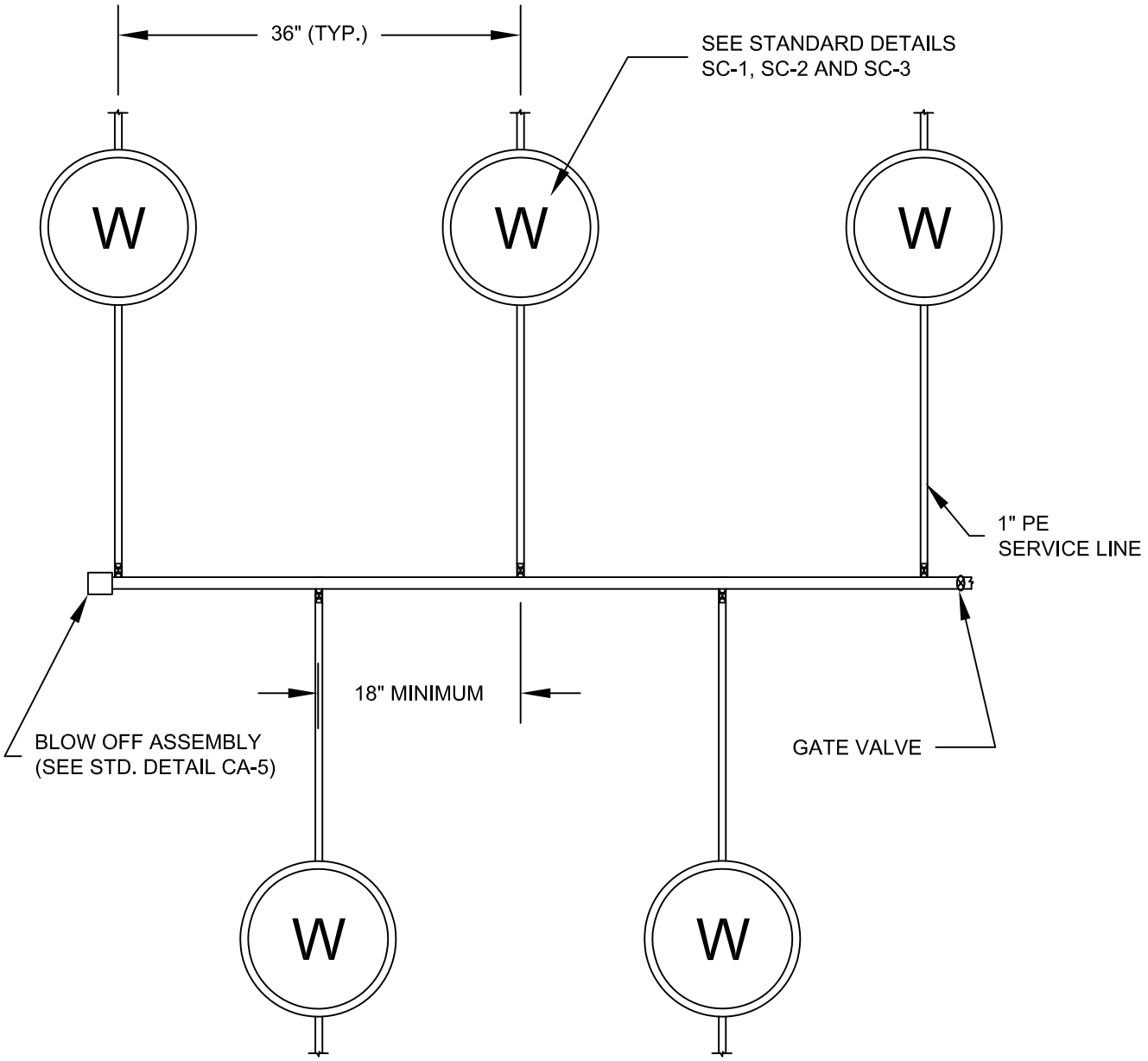

NOTE: DOUBLE METER SETTINGS ARE TO BE USED WHEREVER POSSIBLE TO MINIMIZE NUMBER OF SETTINGS.

Bedford Regional Water Authority

No.	Date
1	August 20, 2012
2	October 6, 2017
3	
4	

METER BANK DETAIL

Detail: **SC-4**

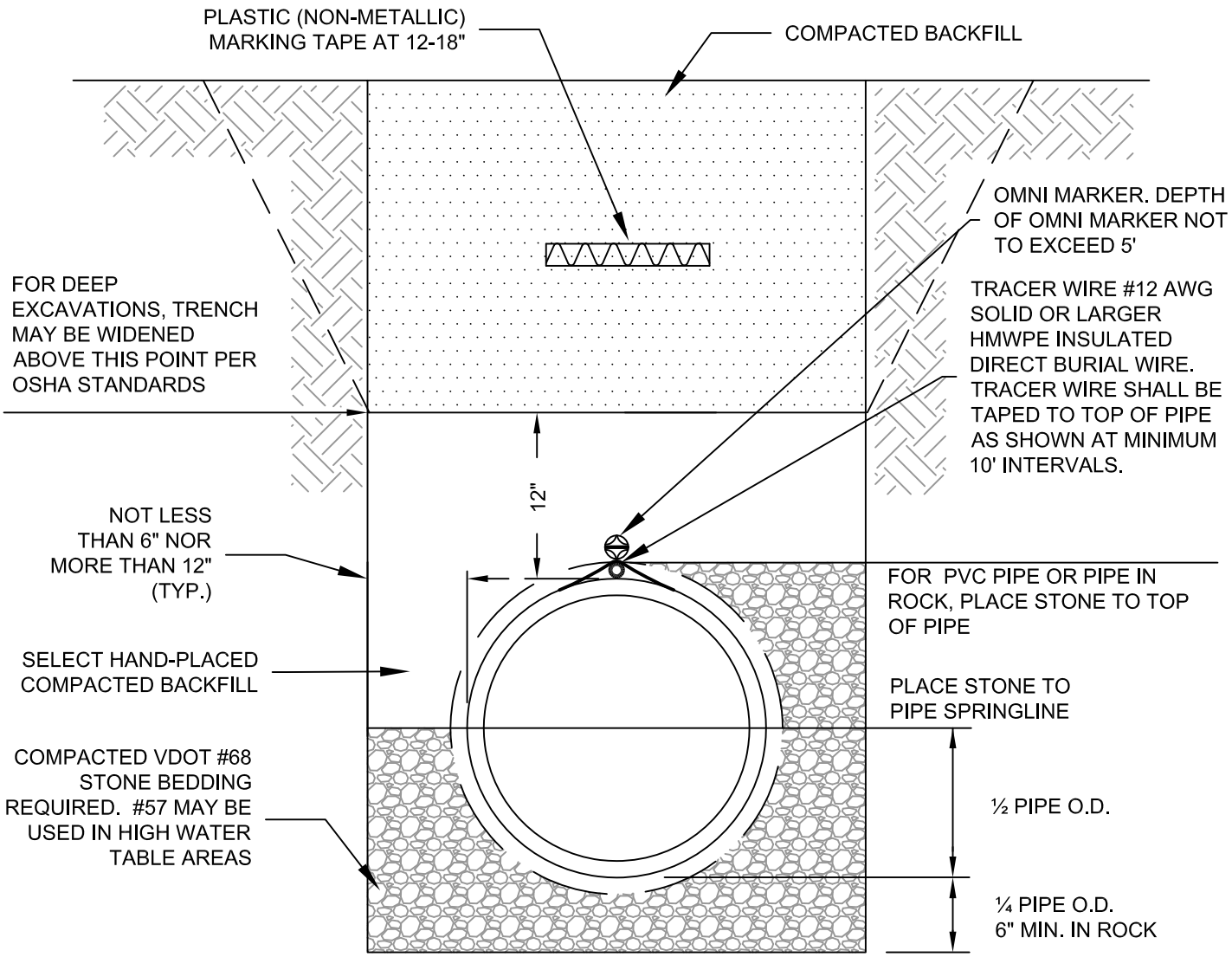

NOTE: THIS DETAIL APPLICABLE FOR DEPTHS LESS THAN 14 FEET. SEE PLANS FOR MODIFICATIONS IN DEEPER TRENCHES.

Bedford Regional Water Authority

No.	Date
1	August 20, 2012
2	October 6, 2017
3	
4	

SANITARY SEWER TRENCH BED

Detail: **TB-1**

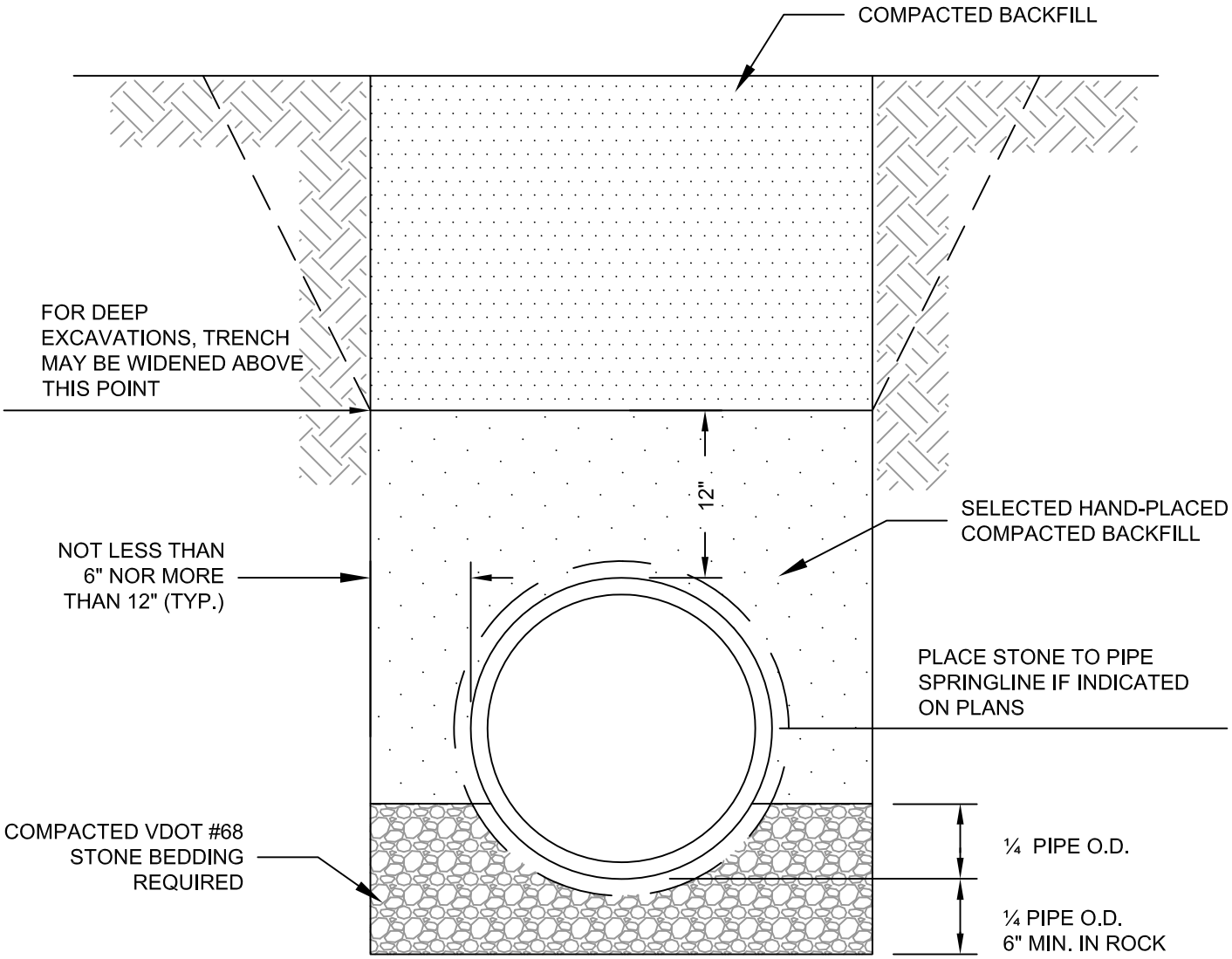

NOTE: THIS DETAIL APPLICABLE FOR DEPTHS LESS THAN 14 FEET.
SEE PLANS FOR MODIFICATIONS IN DEEPER TRENCHES.

Bedford Regional Water Authority

No.	Date
1	August 20, 2012
2	October 6, 2017
3	
4	

STORM SEWER TRENCH BED

Detail: **TB-2**

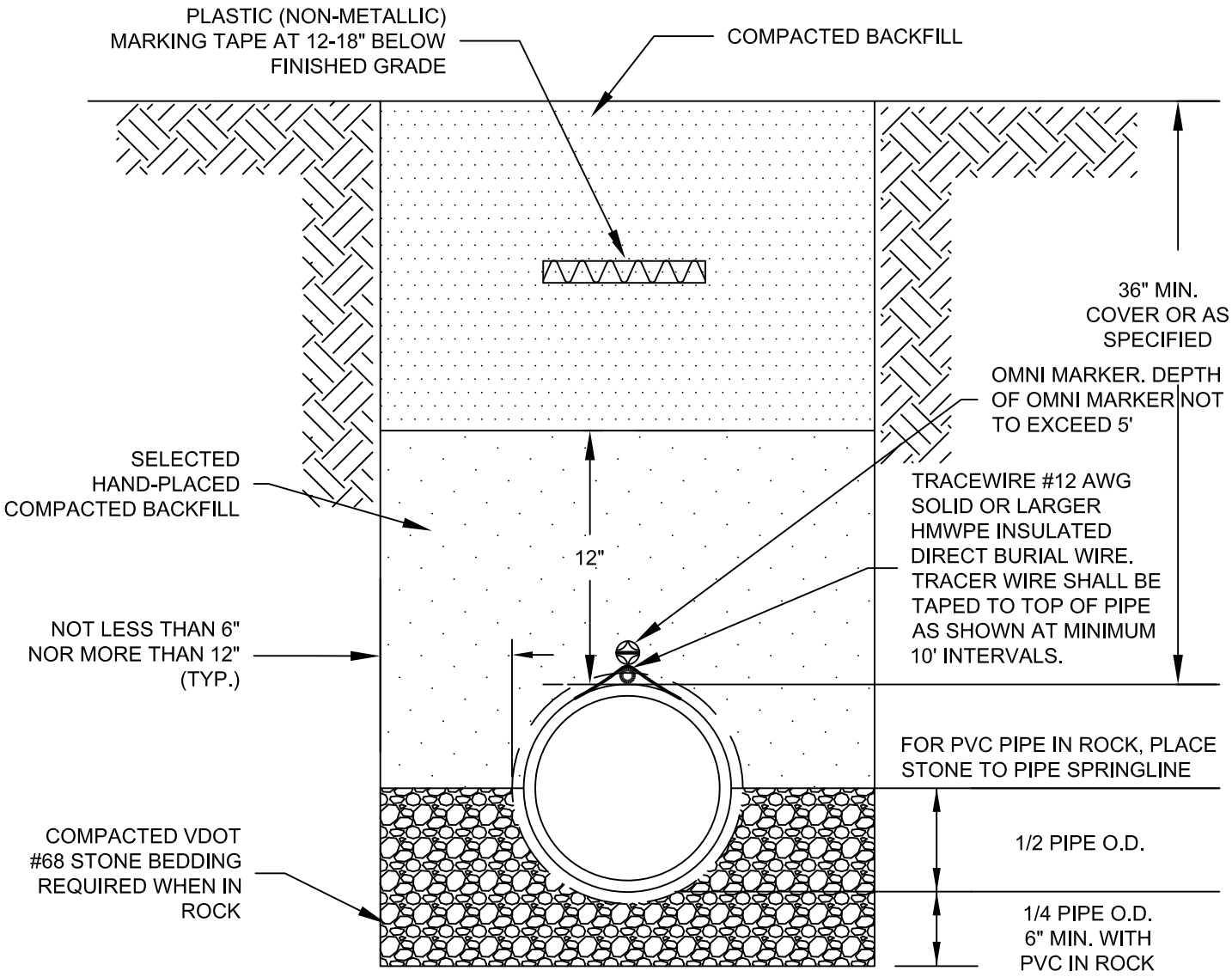

NOTE: THIS DETAIL APPLICABLE FOR DEPTHS LESS THAN 14 FEET. SEE PLANS FOR MODIFICATIONS IN DEEPER TRENCHES.

Bedford Regional Water Authority

No.	Date
1	August 20, 2012
2	October 6, 2017
3	
4	

PRESSURE MAIN TRENCH BED

Detail: **TB-3**

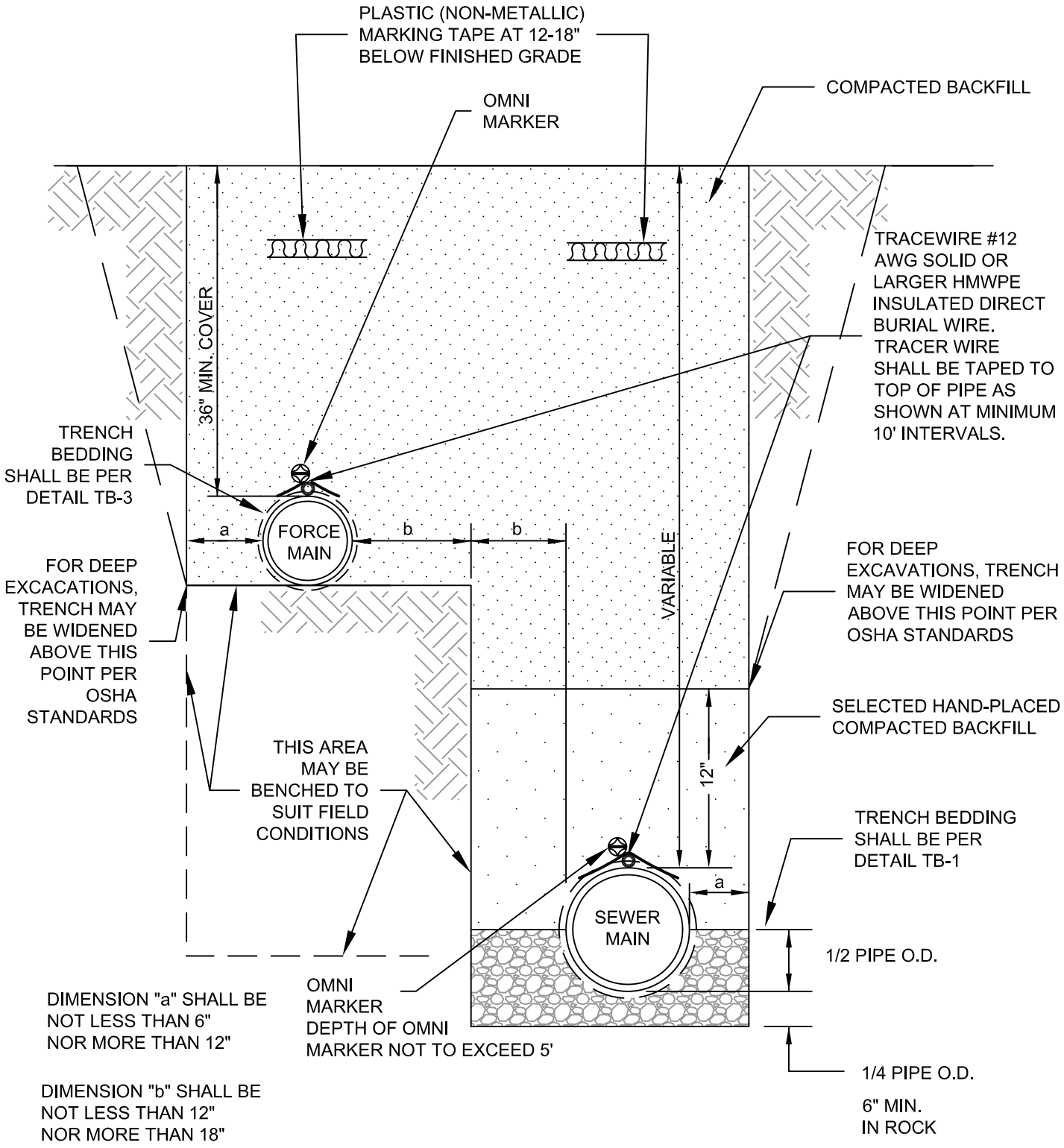

Bedford Regional Water Authority

No.	Date
1	August 20, 2012
2	October 6, 2017
3	
4	

FORCE MAIN / SANITARY SEWER
PARALLEL INSTALLATION TRENCH BED

Detail:

TB-4

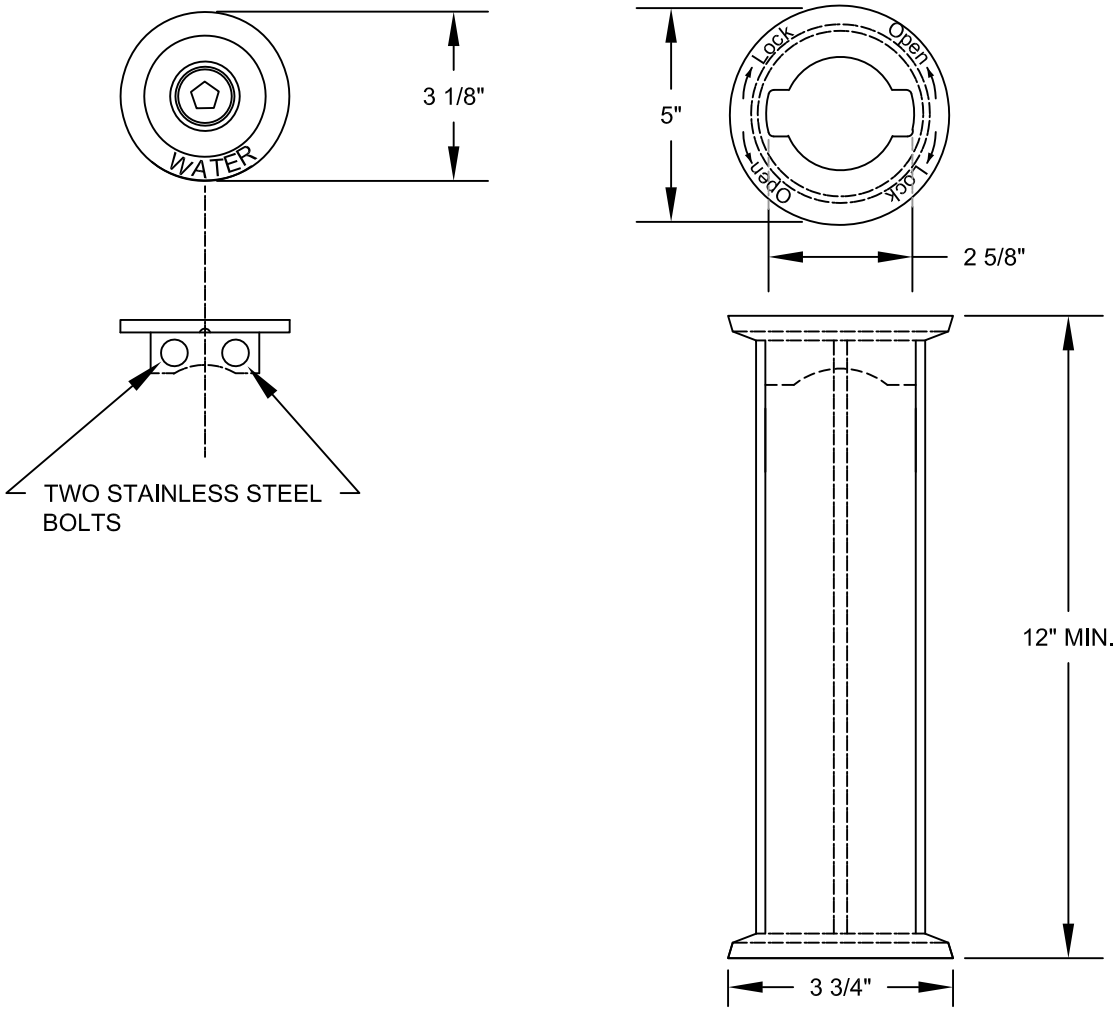

NOTES:

1. CAST IRON TRACER WIRE ACCESS BOX SHALL BE AS MANUFACTURED BY DRAINAGE & WATER SOLUTIONS, INC. OR APPROVED EQUAL AS FOLLOWS.:

   MODEL # LMKTWAB - WATER TRACER WIRE ACCESS BOX
   MODEL # LMKSEWAB - SEWER TRACER WIRE ACCESS BOX

2. ADJUSTABLE CAST IRON TRACER WIRE ACCESS BOXES SIMILAR TO MODELS TWABADJ18 AND SEWABADJ18 BY DRAINAGE & WATER SOLUTIONS, INC. SHALL BE USED IN NEW DEVELOPMENTS WHERE FINAL GRADE ADJUSTMENTS ARE EXPECTED.

3. TRACER WIRE ACCESS BOX SHALL BE INSTALLED AT ALL WATER & SEWER APPURTENANCES. WHERE MULTIPLE ITEMS ARE IN CLOSE PROXIMITY TO EACH OTHER, THE NUMBER AND LOCATION OF TRACER WIRE ACCESS BOXES SHALL BE AS DIRECTED BY THE AUTHORITY INSPECTOR.

4. TRACER WIRE ACCESS BOX SHALL BE INSTALLED A MAXIMUM OF 12-INCHES HORIZONTAL DISTANCE FROM APPURTENANCE.

5. TRACER WIRE SHALL BE #12 AWG SOLID OR LARGER HMWPE INSULATED DIRECT BURIAL WIRE.

6. TRACER WIRE SHALL BE ABLE TO EXTEND A MINIMUM OF12-INCHES AND NO MORE THAN18-INCHES OUTSIDE THE TOP OF THE TRACER WIRE ACCESS BOX.

Bedford Regional Water Authority

No.	Date
1	August 20, 2012
2	October 6, 2017
3	
4	

TRACER WIRE ACCESS BOX

Detail: **TW-1**

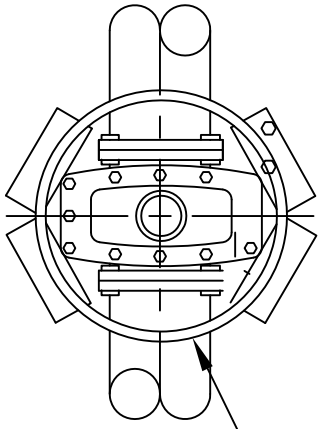

PLAN

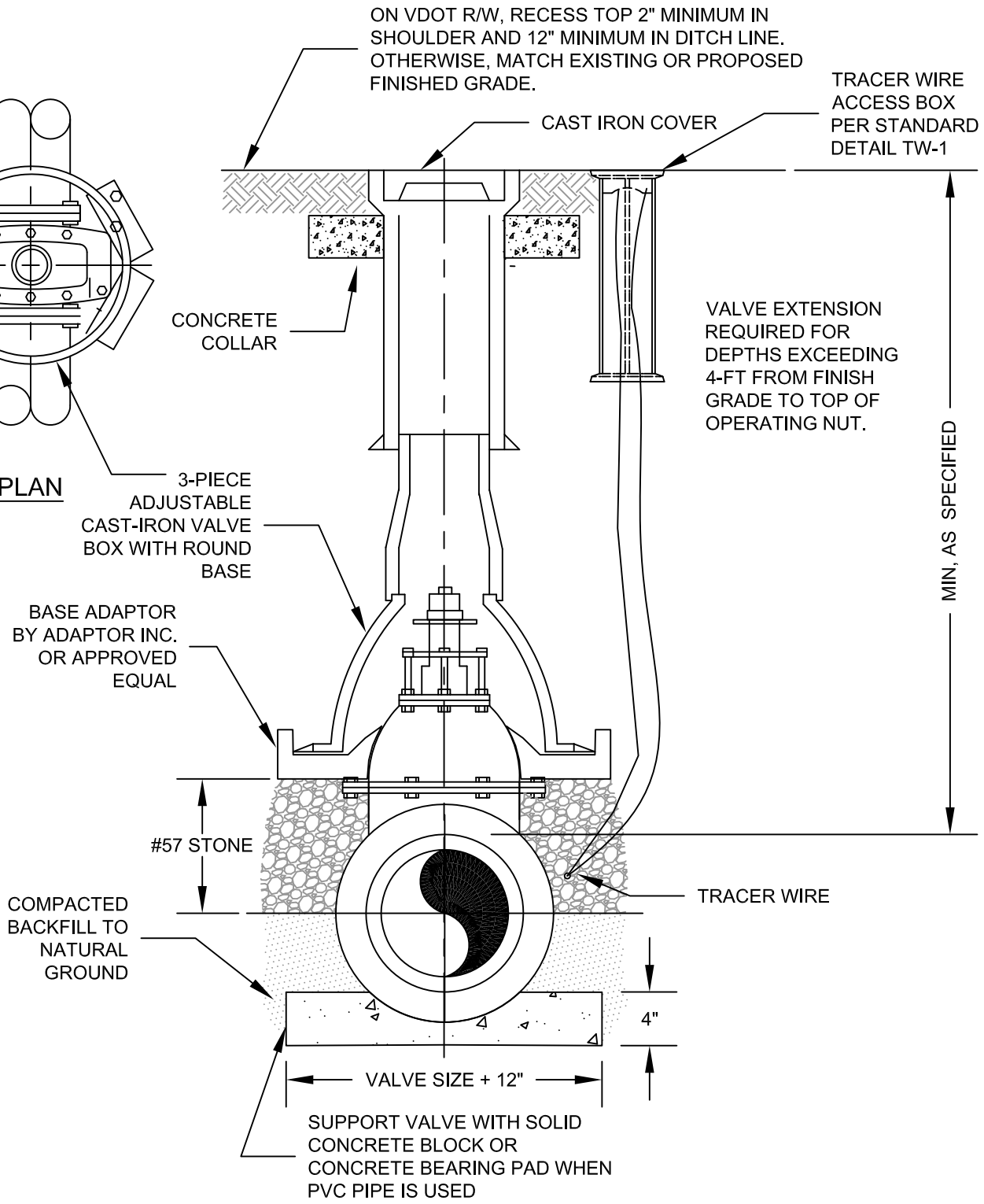

SECTION

Bedford Regional Water Authority

No.	Date
1	August 20, 2012
2	October 6, 2017
3	
4	

3-PIECE VALVE BOX INSTALLATION

Detail: **VB-1**

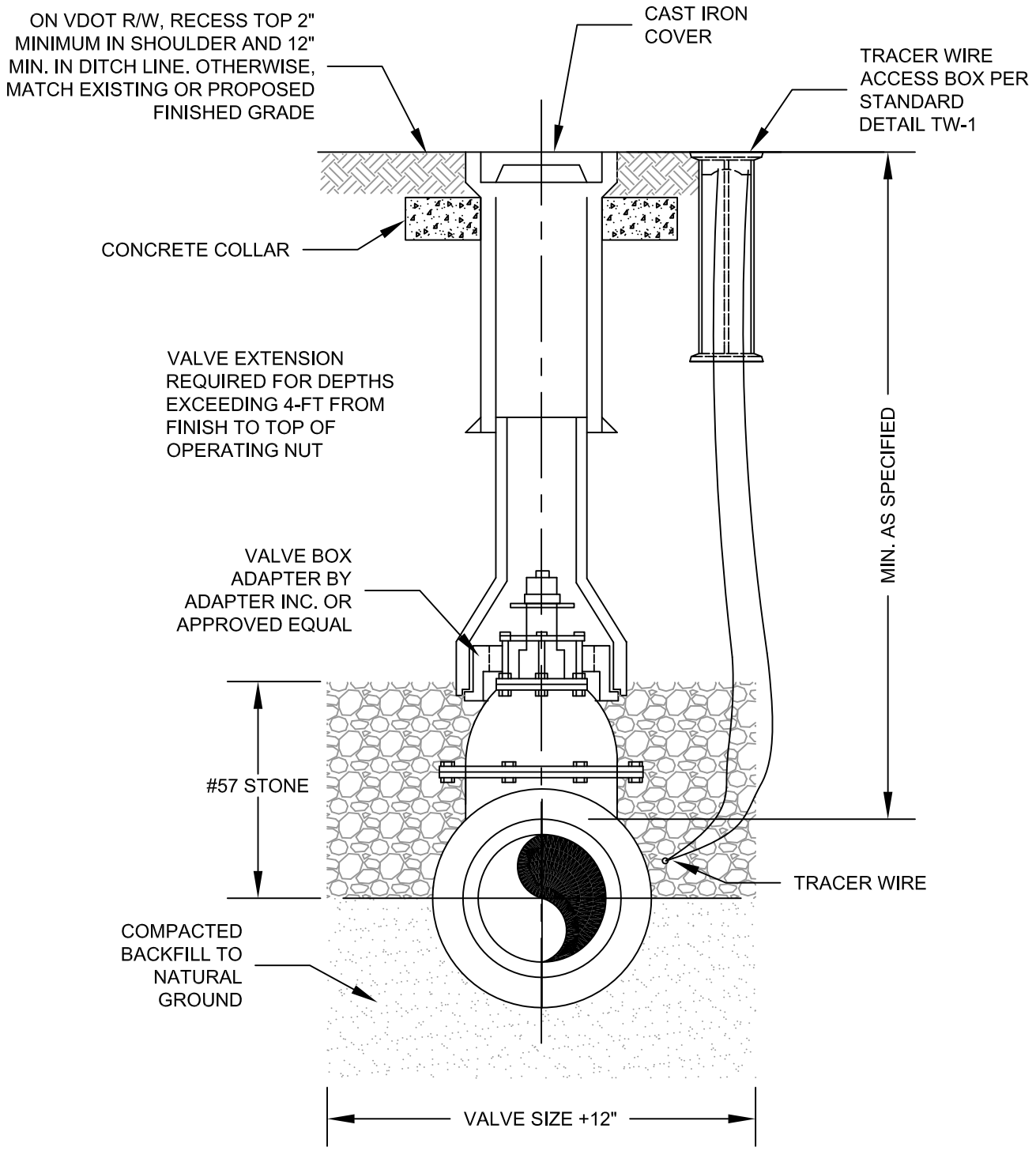

SECTION VIEW

Bedford Regional Water Authority

No.	Date
1	August 20, 2012
2	October 6, 2017
3	
4	

2-PIECE VALVE BOX INSTALLATION

Detail: **VB-2**

Appendix B

Waiver and Substitution Request Forms

REQUEST FOR WAIVER, MODIFICATION OR FIELD CHANGE

Bedford Regional Water Authority
Master Specifications

Item/Standard: _____

Specification Section Number: _____

Project: _____

Authority Project Number: _____

Station / Location: _____

Project Inspector: _____

Design Engineer: _____

Person Making Request: _____

Name & Title

_____ Company Name _____ Telephone Number _____ Email Address

Justification / Reason for Request:

_____

_____

_____

Inspector Comments:

_____

_____

_____

Design Engineer's Comments:

_____

_____

_____

Authority's Comments:

_____

_____

_____

☐ Approved ☐ Disapproved Signed: _____

Authority's Representative

SUBSTITUTION / OR EQUAL REQUEST

Bedford Regional Water Authority
Master Specifications

Item/Standard: _____

Specification Section Number: _____

Project: _____

Authority Project Number: _____

Station / Location: _____

Project Inspector: _____

Design Engineer: _____

Person Making Request: _____

Name & Title

_____ _____ _____

Company Name Telephone Number Email Address

Proposed Substitution: _____

Manufacturer: Model Number:

Differences between proposed substitution and specified product:

_____

_____

Reason for not providing specified item:

_____

_____

Similar Installations:

Project: _____

Contact/Owner: _____

Address: _____

Date Installed:

AUTHORITY'S REVIEW

- ☐ Substitution Approved
- ☐ Substitution Approved as noted
- ☐ Substitution Rejected - Use specified materials

Signed: _____

Authority's Representative

Appendix C

Test Tables
And Data Sheets

Air Test Data Sheet

Project:	Date:	Test #:
Contractor:	Project #:	
Design Engineer:	Plan Sheet #:	
Construction Technician:	Signature:	

Specified Maximum Pressure Drop = 1 PSIG
Allow line pressure to stabilize for 2 minutes.

MH # to MH #		Type of Pipe	Pipe Dia.	Pipe Length (LF)	Allowable Time (Use Table on page 33 03 00-20)	Initial Line Pressure	Start Pressure (psig)	Stop Pressure (psig)	Total Loss	Elapsed Time (min:sec)	Pass or Fail (P or F)

If test fails, complete:
Identify Section (s) that failed_____
Leak (was) (was not) located. Method Used:_____
Description of Leakage Found_____
Describe corrective action _____
_____
For test results after repair, refer to test #_____

Manhole Vacuum Test Records

Project:	Date:	Test #:
Contractor:	Project #:	
Design Engineer:	Plan Sheet #:	
Construction Technician:	Signature:	

Specified Vacuum Drop = 1 in Hg

Description/ Manhole Number	Station Number	Depth of Manhole (ft)	Diameter (inches)	Minimum test time (Min : Sec)	Start test in/Hg	End test in/Hg	Time Elapse (Use Table 1 on page 33 30 00-7)	Pass or Fail

If test fails, complete:
Identify Section (s) that failed_____
Leak (was) (was not) located. Method used_____ Plan Sheet___of____: Station_____+_____
Describe corrective action_____
For test results after repair, refer to test #_____, Technician_____.

Watermain Pressure Test Record

Owner_____ Water Main Leakage Test_____
Contractor_____ Criterion_____
Field Location_____ Test No._____ Sheet_____ of____
JN_____ Plan Sheet Reference_____ Calculated by:_____ Date:_____
Job_____ Checked by:_____ Date:_____

Pipe Under Test					Test Specifications			Field Test Data			
Type	From Station	To Station	L. Length (Ft.)	D. Dia. (In.)	Test Pressure (PSI)	Length of Test	Maximum Leakage (Use Formula)	Start Test	Stop Test	Total Leakage This Test	Pass or Fail

Construction Technician:_____
Signature:_____

Multiply by 2 for 2 hour test
(Refer to table on page 33 03 00-18)

$$L = \frac{SD\sqrt{P}}{148{,}000}$$

L = allowable leakage, in gallons per hour
S = length of pipe tested, in feet
D = nominal diameter of the pipe, in inches
P = average test pressure during the leakage test, in pounds per square inch (gauge)

If test fails, complete:
Identify Section (s) that failed_____
Leak (was) (was not) located. Describe leakage found_____
_____ Plan Sheet___of____: Station _____+_____
Describe corrective action _____
_____
For test results after repair, refer to test #_____, Technician_____

Appendix D

Bedford County
Erosion & Sediment Control Ordinance and Seeding Requirements

(To ensure latest version, refer to Bedford County Community Development Division of Natural Resources)

SEEDING REQUIREMENTS

Virginia Erosion and Sediment Control Regulation Minimum Standard #1

Permanent or temporary soil stabilization shall be applied to denuded areas within 7 days after final grade is reached on any portion of the site. Temporary soil stabilization shall be applied within 7 days to denuded areas that may not be at final grade but that will remain dormant (undisturbed) for longer than 30 days. Permanent stabilization shall be applied to areas that are to be left dormant for more that one year.

PERMANENT SEEDING (rates per acre):

For lawn stabilization

February 1 to May 15	100 lbs. tall fescue 15 lbs. annual rye 2 lbs. red clover
May 16 to July 31	120 lbs. tall fescue 10 lbs. foxtail millet 2 lbs. red clover
August 1 to September 15	100 lbs. tall fescue 15 lbs. annual rye 2 lbs. red clover
September 16 to January 31	120 lbs. tall fescue 10 lbs. cereale rye 2 lbs. red clover

For wildlife plantings or natural areas

Year-round broadcast rate	5 lbs. orchard grass 5 lbs. ladino clover OR 3 lbs. crown vetch OR 8 lbs. hairy vetch
For steeply-sloped areas	40 lbs. tall fescue 10 lbs. ladino clover

TEMPORARY SEEDING (rates per acre)

Winter	40 lbs. annual rye 40 lbs. cereale rye
Summer	40 lbs. annual rye 40 lbs. foxtail millet

FERTILIZER AND LIME (required for both temporary and permanent seeding and all seasons)

Fertilizer – 1500 lbs. of 10-18-10 per acre
Lime – 2 tons per acre

MULCHING

Straw at 80 bales per acre or an approved manufactured mulch/stabilization fabric or material

ARTICLE I. - EROSION AND SEDIMENT CONTROL[2]

Footnotes:

--- (**2**) ---

State Law reference— Erosion and Sediment Control Law, Code of Virginia, §§ 10.1-560-10.1-571; local control programs, § 10.1-562.

Sec. 7-1. - Title, purpose and authority.

This article shall be known as the "Erosion and Sediment Control Ordinance of Bedford County, Virginia." The purpose of this chapter is to conserve the land, water, air and other natural resources of the County of Bedford and the Town of Bedford by establishing requirements for the control of erosion and sediment deposition, and by establishing procedures whereby these requirements shall be administered and enforced.

(Ord. No. O060914-06, 6-9-2014)

State Law reference— Code of Virginia, § 62.1-44.15:51.

Sec. 7-2. - Definitions.

For the purpose of this article, the following words and terms shall have the meanings ascribed to them in this section:

Administrator: The representative of the board of supervisors (the permit issuing authority) who has been appointed to serve as the agent of the board of supervisors in administering this chapter.

Agreement in lieu of a plan: A contract between the plan-approving authority and the owner/person responsible for the carrying out the plan that specifies conservation measures which must be implemented in the construction of a single-family residence; the county, in lieu of a formal site plan, may execute this contract.

Applicant: Any person submitting an erosion and sediment control plan for approval or requesting the issuance of a permit, when required, authorizing land-disturbing activities to commence.

Board: The Virginia Soil and Water Conservation Board.

Certified inspector: An employee or agent of a program authority who: (i) holds a certificate of competence from the board in the area of project inspection; or (ii) is enrolled in the board's training program for project inspection and successfully completes such program within one (1) year after enrollment.

Certified plan reviewer: An employee or agent of a program authority who: (i) holds a certificate of competence from the board in the area of plan review; (ii) is enrolled in the board's training program for plan review and successfully completes such program within one (1) year after enrollment; or (iii) is licensed as a professional engineer, architect, certified landscape architect or land surveyor or professional soil scientist pursuant to Code of Virginia, article 1 (§ 54.1-400 et seq.) of chapter 4 of title 54.1.

Certified program administrator: An employee or agent of a program authority who: (i) holds a certificate of competence from the board in the area of program administration; or (ii) is enrolled in the board's training program for program administration and successfully completes such program within one (1) year after enrollment.

Clearing: Any activity that removes the vegetation or groundcover, including, but not limited to, the root mat or topsoil.

Common plan of development or sale: A contiguous area where separate and district construction activities may be taking place at different times on different schedules.

Conservation plan, erosion and sediment control plan or *plan:* A document containing material for the conservation of soil and water resources of a unit or groups of units of land. It shall include appropriate maps, appropriate soil and water inventories, and management information, with needed interpretations and a record of decisions contributing to conservation treatment. The plan shall contain all major conservation decisions to assure that the entire unit or units of land will be so treated to achieve the conservation objectives. The plan shall be signed and sealed by a professional engineer, land surveyor, architect or certified landscape architect, except for single-family dwellings.

Conservation standards or *standards:* The criteria, guidelines, techniques and methods for the control of erosion and sediment deposition as set forth in the Virginia Erosion and Sediment Control Handbook.

County: The County of Bedford, Virginia.

Department: The Department of Environmental Quality.

Development: A tract of land developed or to be developed as a single unit under single ownership or unified control, which is to be used for any residential, business, commercial, civic or industrial purpose, or for the purpose of marketing all or a portion of the tract.

Director: The Director of the Virginia Department of Environmental Quality.

Disturbed area: Any area subject to a land-disturbing activity including any area within a public utility easement.

Erosion and sediment control plan: A document containing material for the conservation of soil and water resources of a unit or group of units of land. It may include appropriate maps, an appropriate soil and water plan inventory and management information with needed interpretations and a record of decisions contributing to conservation treatment. The plan shall contain all major conservation decisions to ensure that the entire unit or units of land will be so treated to achieve the conservation objectives.

Erosion impact area: An area of land not associated with current land-disturbing activity but subject to persistent soil erosion resulting in the delivery of sediment onto neighboring properties or into state waters. This definition shall not apply to any lot or parcel of land of ten thousand (10,000) square feet or less used for residential purposes or to shorelines where the erosion results from wave actions or other shoreline processes.

Excavating: Any digging, scooping, or any other method of moving or removing earth material.

Filling: Any depositing or stockpiling of earth material.

Flooding: A volume of water that is too great to be confined within the banks or walls of the stream, waterbody or conveyance system and that overflows onto adjacent lands, thereby causing or threatening damage.

Grading: Any excavating or filling of earth material or any combination thereof, including the land in its excavated or filled condition.

Land-disturbing activity: Any land change which may result in soil erosion from water or wind and the movement of sediment into waters or onto lands, including but not limited to, clearing, grading, excavating, transporting, and filling of land, except that the term shall not include:

(1) Such minor activities as home gardens and individual home landscaping, repairs and maintenance work.

(2) Individual service connections.

(3) Installation, maintenance, or repair of any underground public utility lines, when such activity occurs on existing hard-surface road, street or sidewalk, provided such land-disturbing activity is confined to the area of the road, street, or sidewalk which is hard-surfaced.

(4) Septic tank line or drainage fields, unless included in an overall plan for a land-disturbing activity relating to construction of the building to be served by the septic tank system.

(5) Surface or deep mining.

(6) Exploration or drilling for oil and gas, including the well site, roads, feeder lines and off-site disposal areas.

(7) Tilling, planting, or harvesting of agricultural, horticultural, or forest crops, or livestock feed lot operations; including engineering operations as follows: construction of terraces, terrace outlets, check dams, desilting basins, dikes, ponds, ditches, strip cropping, lister furrowing, contour cultivating, contour furrowing, land drainage and land irrigation; however, this exception shall not apply to harvesting of forest crops unless the area on which harvesting occurs is reforested artificially or naturally in accordance with the provisions of Code of Virginia, ch. 11 (§ 10.1-1100 et seq.) is converted to bona fide agricultural or improved pasture use as described in Code of Virginia, § 10.1-1163B.

(8) Repair or rebuilding of the tracks, right-of-way, bridges, communicating facilities and other related structures and facilities of a railroad company.

(9) Agricultural engineering operations including, but not limited to, the construction of terraces, terrace outlets, check dams, desilting basins, dikes, ponds not required to comply with the provisions of the Dam Safety Act, Code of Virginia, article 2 (§ 10.1-604 et seq.) of chapter 6 of title 10.1, ditches, strip cropping, lister furrowing, contour cultivating, contour furrowing, land drainage and land irrigation.

(10) Disturbed land areas of less than ten thousand (10,000) square feet in size, unless otherwise included elsewhere in this chapter. The ten thousand (10,000) square foot minimum exemption shall not apply to any person who diverts or disturbs the channel of a stream or where there is probability of sediment being deposited into state waters or upon adjoining property owners. Such activity shall fall within the bounds of this chapter and all chapters and sections shall apply and a land-disturbing permit shall be required.

(11) Installation of fence and signposts or telephone and electric poles and other kinds of posts and poles.

(12) Emergency work to protect life, limb and property, and emergency repairs; however, if the land-disturbing activity would have required an approved erosion and sediment control plan if the activity were not an emergency, then the land area disturbed shall be shaped and stabilized immediately in accordance with the requirements of the plan-approving authority.

Land-disturbing permit: A permit issued by the county for clearing, filling, excavating, grading or transporting, or any combination thereof, on all lands, privately owned or otherwise, except those specifically excluded by this chapter.

Owner: The owner or owners of the freehold of the premises or lesser estate therein, a mortgage or vendee in possession, assignee of rents, receiver, executor, trustee, lessee or other person, firm or corporation in control of a property.

Permittee: The person to whom the permit authorizing land-disturbing activities is issued or the person who certifies that the approved erosion and sediment control plan will be followed.

Person: Any individual, partnership, firm, association, joint venture, public or private corporation, trust, estate, commission, board, public or private institution, utility, cooperative, county, town or other political subdivision of this state, any interstate body or any other legal entity.

Plan approving authority: The board, the program authority, or a department of the program authority, responsible for determining the adequacy of a plan submitted for land-disturbing activities on a unit or units

of land and for approving plans. The natural resources administrator or his/her designee is the plan approving authority for Bedford County.

Program authority: A district, county, city or town that has adopted a soil erosion and sediment control program which has been approved by the board. Bedford County is the program authority.

State waters: All waters on the surface and under the ground wholly or partially within or bordering the commonwealth or within its jurisdiction.

Transporting: Any movement of earth material from one place to another, when such movement results in destroying the vegetative cover, either by tracking or the buildup of earth materials, to the extent that erosion and sediment deposition will result from the area over which such transporting occurs.

Virginia Stormwater Management Program or *VSMP:* Means a program approved by the board after September 13, 2011, that has been established by a VSMP authority to manage the quality and quantity of runoff resulting from land-disturbing activities and shall include such items as local ordinances, rules, permit requirements, annual standards and specifications, policies and guidelines, technical materials, and requirements for plan review, inspection, enforcement, where authorized in the Act and associated regulations, and evaluation consistent with the requirements of the Stormwater Maintenance Act and associated regulations.

(Ord. No. O060914-06, 6-9-2014)

Sec. 7-3. - Local erosion and sediment control program.

There is hereby established a local erosion and sediment control program consisting of this chapter and the Virginia Erosion and Sediment Control Handbook, as amended from time to time. The Virginia Erosion and Sediment Control Regulations, as amended from time to time, are adopted and incorporated as a part of the county program. All construction practices and requirements shall comply with the specifications of the current edition of the Virginia Erosion and Sediment Control Handbook.

(Ord. No. O060914-06, 6-9-2014)

Sec. 7-4. - Plan submission, approval requirements and permit issuance.

(a) Except as provided in Code of Virginia, § 62.1-44.15:56 for state agency and federal entity land-disturbing activities, no person shall engage in any land-disturbing activity until he has submitted to the Virginia Erosion and Sediment Control Plan Authority (VESCP authority) an erosion and sediment control plan for the land-disturbing activity and the plan has been reviewed and approved. Upon the development of an online reporting system by the department, but no later than July 1, 2014, a VESCP authority shall then be required to obtain evidence of Virginia Stormwater Management Program permit coverage where it is required prior to providing approval to begin land disturbance. Where land-disturbing activities involve lands under the jurisdiction of more than one VESCP, an erosion and sediment control plan may, at the request of one or all of the VESCP authorities, be submitted to the department for review and approval rather than to each jurisdiction concerned. The department may charge the jurisdictions requesting the review a fee sufficient to cover the cost associated with conducting the review. A VESCP may enter into an agreement with an adjacent VESCP regarding the administration of multijurisdictional projects whereby the jurisdiction that contains the greater portion of the project shall be responsible for all or part of the administrative procedures.

    (1) Where the land-disturbing activity results from the construction of a single-family residence, an agreement in lieu of a plan may be substituted for an erosion and sediment control plan if executed by the permit issuing authority, however the permit-issuing authority reserves the right to require an erosion and sediment control plan and a land-disturbing permit for a single-family residence considering such factors as the square footage of disturbed area involved, topography, proximity to water sources or occurrence of violation.

(2) Additionally, any residential land-disturbing activity involving more than ten thousand (10,000) square feet of disturbed area and/or within two hundred (200) linear feet of any state water shall require an erosion and sediment control plan.

(b) When land-disturbing activity will be required of a contractor performing construction work pursuant to a construction contract, the preparation, submission and approval of an erosion and sediment control plan shall be the responsibility of the owner. However, any person contracted to perform land-disturbing work as provided in Code of Virginia, § 62.1-44.15:52, is equally responsible for the approval of an erosion and sediment control plan and issuance of a land-disturbing permit prior to commencement of land-disturbing activity.

(c) No land-disturbing, building or other permit shall be issued by the county for any work which involves land-disturbing activities for which a permit is required unless the applicant submits with his application an erosion and sediment control plan for approval by the administrator, and certifies by signature upon that application that the plan will be followed.

(d) Applications for a land-disturbing permit to do work in Bedford County, whether residential or commercial, shall adhere to the respective checklist as provided by the Bedford County Department of Natural Resources. If the items contained within the specific checklist are not included in the submittal for application of the land-disturbing permit, a review of the erosion and sediment control plan shall not occur until which time the owner or applicant provides all pertinent information for site development.

(e) Upon receipt of a plan submitted under this chapter, together with the required fees, the administrator shall act on such plan within sixty (60) days, by either approving the plan in writing or by disapproving the plan in writing, giving specific reasons for disapproval. The administrator shall approve the plan if the plan meets the conservation standards of the county's erosion and sediment control program and if the person responsible for carrying out the plan certifies that he will properly perform the erosion and sediment control measures included in the plan and will comply with all provisions of this chapter. In addition, as a prerequisite to land disturbance, the person responsible for carrying out the plan shall provide the name of an individual holding a certificate of competence, as provided by Code of Virginia, § 62.1-44.15:52, who will be in charge of and responsible for carrying out the land-disturbing activity.

If best management practices (BMP's) are a part of the approved plan, a stormwater facility maintenance agreement shall be required outlining in writing the person or party responsible for long-term maintenance on these BMP's. The agreement must be completed, signed, notarized and recorded prior to issuance of the land-disturbing permit.

(f) If a plan is determined to be inadequate, the administrator shall specify such modifications, terms and conditions as will permit approval of the plan and shall communicate such requirements to the party responsible for plan design.

(g) A plan approved under this chapter may be changed by the administrator in the following cases:

(1) Where inspection reveals the inadequacy of the plan to accomplish the objectives of the plan; or

(2) When it is found that, because of changed circumstances or for other reasons, the approved plan cannot be effectively carried out.

(h) In order to prevent further erosion and to protect adjoining land or water resources, the administrator may identify land as an erosion impact area and require an approved plan, regardless of size, type or location of the land disturbance.

(i) Any person who conducts land-disturbing activities on property having frontage along state waters must, as a requirement of his land-disturbing permit, install and maintain riprap or other specific shoreline protective measures which, as a minimum, shall protect the land area from erosion caused by wave action, water level fluctuation or other water movement, and shall also protect the water from deposition of sediment resulting from erosion of the shoreline. Riprap protection shall be installed according to section 3-19 of the Virginia Erosion and Sediment Control Handbook. Alternate natural methods of shoreline protection are encouraged and may be used, subject to approval of the plan approving authority and other governing organizations.

(j) Electric, natural gas and telephone utility companies, interstate and intrastate natural gas pipeline companies or railroad companies shall file general erosion and sediment control specifications annually with the board for review and written comments. If said utilities undertake any land-disturbing activities and have not filed an annual plan to the board, they shall be subject to all requirements and specifications within this chapter. If said utilities have filed an annual plan with the board and are proposing activities included in paragraphs (1) and (2) of this subsection, they shall be considered exempt from the provisions of this chapter.

(1) Construction, installation and maintenance of electric, natural gas and telephone utility lines and pipelines; and

(2) Construction of the tracks, rights-of-way, bridges, communication facilities and other related structures and facilities of the railroad company.

(3) Projects not included in paragraphs (1) and (2) of this subsection shall comply with the requirements of the county erosion and sediment control program.

(k) State agency projects are exempt from the provisions of this chapter except as provided for in the Code of Virginia, § 62.1-44.15:56.

(l) All projects in Bedford County that will disturb one (1) acre or more or are part of a common plan of development or sale are subject to the Department of Environmental Quality (DEQ), Virginia Stormwater Management Program (VSMP) permit. Common plans of development or sale are defined as plats that were approved and recorded on and after 1 July 2014 per DEQ.

(Ord. No. O060914-06, 6-9-2014)

Sec. 7-5. - Requirement of a project surety.

(a) Prior to the issuance of any land-disturbing permit, the administrator may require an applicant to submit a reasonable performance bond with surety, cash escrow, letter of credit, any combination thereof, or such legal arrangement acceptable to the county attorney to ensure that measures could be taken by the county at the applicant's expense should he fail, after proper notice, within the time specified to initiate or maintain appropriate conservation action which may be required of him by the approved plan as a result of land-disturbing activity. If the county takes such conservation action upon failure by the permittee, the county may collect from the permittee for the difference should the amount of the reasonable cost of such action exceed the amount of the security held.

(b) The bond requirement may be waived for county-supported agencies, such as the public service authority, school board, nursing home, recreation committee, and fire and rescue units.

(c) Upon achievement of adequate stabilization of the land-disturbing activity, or upon request from the owner, such bond, cash escrow, letter of credit or other legal arrangement or the unexpended or unobligated portion thereof, shall be refunded to the applicant or terminated. All projects approved with means of stormwater conveyance (channels, pipes, etc.) shall have design certification submitted to the plan approving authority prior to release of any surety providing reasonable assurance that all stormwater measures have been constructed as designed, are well stabilized and appear to be in proper working order.

(Ord. No. O060914-06, 6-9-2014)

Sec. 7-6. - Fees.

The fee for a single-family dwelling land-disturbing permit shall be fifty dollars ($50.00) per acre or fraction thereof, of the disturbed area, with a minimum fee of fifty dollars ($50.00). The fee for a land-disturbing permit for all other development shall be one hundred fifty dollars ($150.00) per acre, or fraction thereof, of the disturbed area, with a minimum fee of one hundred fifty dollars ($150.00). The disturbed area of a residential subdivision shall be calculated to include all the land within the public utility easement.

(Ord. No. O060914-06, 6-9-2014)

Sec. 7-7. - Standards to be used in preparation and consideration.

(a) The current issue of the Virginia Erosion and Sediment Control Handbook shall be used in preparing the plan required by this article. The administrator, in considering the adequacy of such plan, shall be guided by the guidelines and standards set out in such handbook.

(b) Plan submission checklists, as set forth in subsection 7-4(d) of this article, shall be used in erosion and sediment control plan submission. Both residential and commercial checklists, as amended from time to time, are available at the Bedford County Department of Natural Resources.

(c) All work and installation of materials shall be in accordance with the Virginia Erosion and Sediment Control Handbook, manufacturer's specifications, and/or approved and inspected by the plan approving authority of Bedford County.

(d) Alternative shoreline stabilization shall be allowed upon submittal and approval by the administrator and other governing organizations.

(e) If the project disturbs an acre or more or is in a common plan of development or sale (platted on 1 July 2004 or later), a Virginia Stormwater Management Program (VSMP) permit will be required. If a VSMP permit is not required, stormwater management will be addressed by Minimum Standard 19 found in 9VAC25-840-40: "Minimum Standards".

(f) Design flow summary tables are required with a commercial erosion and sediment control plan. Design flow summary information can be obtained through the Bedford County Department of Natural Resources.

(Ord. No. O060914-06, 6-9-2014)

Sec. 7-8. - Inspection of land-disturbing activities: correction of defects.

(a) Periodic inspections of land-disturbing activities (those with a land-disturbing permit as well as those under an agreement in lieu of a plan) shall be provided by certified personnel from one (1) of the following sources or a combination thereof:

    (1) Bedford County Department of Natural Resources personnel;

    (2) Bedford County Department of Building Inspections personnel; or

    (3) Other qualified Bedford County Code Enforcement personnel.

    Enforcement shall be the responsibility of the administrator; the administrator may require monitoring and reports from the person responsible for carrying out the plan to ensure compliance with the approved plan, and to determine whether the measures required in the plan are effective in controlling erosion and the movement of sediment. At which time the owner, permittee or person responsible for carrying out the plan makes application for the land-disturbing permit, they are hereby notified that inspections shall take place upon the property covered under the plan at any reasonable time and by the personnel listed in subsection (a) above, pursuant to 4VAC50-30-60(b) of the regulations.

(b) If the administrator or his or her designee determines that there is a failure to comply with the plan and/or the erosion and sediment control regulations, a notice of violation shall be communicated to the permittee or person responsible for carrying out the plan by telephone, mail or by delivery to the agent or employee supervising such activities. The notice shall specify the measures needed to comply with the plan and shall specify the time within which such measures shall be completed. Upon failure to comply within the time specified, a notice to comply shall be issued and the permittee or person responsible for carrying out the plan shall be deemed to be in violation of this article. A notice to comply shall specify all corrective action and provide a timeframe for completion.

(c) Projects that are under an agreement in lieu of a plan shall have the same notice of a violation as set forth in subsection (b) above, listing the timeframe for completion of corrective action. If the following inspection reveals that all corrective action has not been completed in the time allowed, a stop work order shall be posted and the owner shall be required to obtain a land-disturbing permit and correct all violations prior to commencement of any construction activities on the project site.

(d) If land-disturbing activities have commenced without an approved plan, the administrator shall require that all construction activities be stopped until an erosion and sediment control plan is submitted, erosion and sediment control measures are installed and all required permits are obtained.

(e) Where the alleged noncompliance is causing, or is in imminent danger of causing, harmful erosion of lands or sediment deposition in waters within the watersheds of the commonwealth, a stop work order may be issued whether or not the alleged violator has been issued a notice to comply as specified in subsection (b) above. The order shall be posted on-site and shall remain in effect for seven (7) days from the date of service pending application by the enforcing authority or alleged violator for appropriate relief to the Circuit Court of Bedford County. The owner may appeal the issuance of a stop work order to the Circuit Court of Bedford County. Any person violating or failing, neglecting or refusing to obey an order issued by the natural resources administrator or his designee may be compelled in a proceeding instituted in the Bedford County Circuit Court to obey same and to comply therewith by injunction, mandamus or other appropriate remedy. Upon completion and approval of corrective action and obtaining an approved plan and all required permits, the order shall immediately be lifted. Nothing in this section shall prevent the administrator or his designee from taking any other action specified in section 7-11.

(Ord. No. O060914-06, 6-9-2014)

Sec. 7-9. - Closure of land-disturbing activities.

(a) It shall be required that all developments shall have achieved final grade and adequate stabilization of the disturbed areas located within the project prior to issuance of the certificate of zoning compliance (CZC) and certificate of occupancy (CO). If weather or other extenuating circumstance prevents attainment of final grade and/or final stabilization, per section 30-10 of the Bedford County Zoning Ordinance, a temporary CZC shall be granted until which time the owner or person responsible for carrying out the plan can achieve final stabilization.

(b) Development projects that provide on-site stormwater management facilities (pipes, channels, ditches, basins, etc.) are hereby required to submit, upon completion and stabilization of the project, design certification for all manner of stormwater conveyance. Certification shall be provided by a licensed professional engineer and shall include language and/or as-built drawings as to the conformance of said structures to the plan, their stabilization and working order.

(Ord. No. O060914-06, 6-9-2014)

Sec. 7-10. - Severability.

If any section, subsection, sentence, clause or phrase of this article is for any reason held illegal, invalid, or unconstitutional by the decision of any court of competent jurisdiction, such decision shall not affect the validity of the remaining portions hereto. The county board of supervisors hereby declares that it would have passed this chapter and each section, subsection, sentence, clause, and phrase hereof, irrespective of the fact that any one or more section, subsections, sentences, clauses, or phrases be declared illegal, invalid, or unconstitutional.

(Ord. No. O060914-06, 6-9-2014)

Sec. 7-11. - Violations of penalty, injunctive relief, civil relief.

(a) A violation of any provision of this article shall be deemed a class 1 misdemeanor.

(b) Civil penalties:

(1) Failure to comply with any of the nineteen (19) minimum standards as set forth in the Commonwealth of Virginia Erosion and Sediment Control Regulations shall result in a one hundred dollar ($100.00) per violation per day penalty;

(2) Commencement of a land-disturbing activity without an approved land-disturbing permit as provided in section 7-2 shall result in a one thousand dollar ($1,000.00) per violation per day penalty;

(3) Failure to obey a stop work order shall result in a one thousand dollar ($1,000.00) per violation per day penalty; and

(4) Each day during which the violation is found to have existed shall constitute a separate offense. However, in no event shall a series of specified violation(s) arising from the same operative set of facts result in civil penalties which exceed a total of three thousand dollars ($3,000.00), except that a series of violations arising from commencement of land-disturbing activities without an approved plan for any site shall not result in civil penalties which exceed a total of ten thousand dollars ($10,000.00). The assessment of civil penalties according to this schedule shall be in lieu of criminal sanctions and shall preclude the prosecution of such violation as a misdemeanor under subsection (a) of this section.

(c) The county attorney shall, upon request of the county, take legal action to enforce the provisions of this article.

(d) Individuals who hold a responsible land disturber certification as issued by the Virginia Department of Environmental Quality (DEQ) are hereby considered to be the person responsible for carrying out the plan and upon repeated violations, will be reported to DEQ for revocation of their certification. A responsible land disturber is also accountable for any and all sanctions included in this article and is subject to the same penalties as the owner of a property.

(e) The county or board may apply to the Circuit Court of Bedford County for injunctive relief to enjoin a violation or a threatened violation of the article, without the necessity of showing that there does not exist an adequate remedy at law.

(f) In addition to any criminal or civil penalties provided, any person who violates any provision of this article may be liable to the county in a civil action for damages.

(g) Without limiting the remedies which may be obtained in this section, any person violating or failing, neglecting or refusing to obey any injunction, mandamus or other remedy obtained pursuant to this section shall be subject, in the discretion of the court, to a civil penalty not to exceed two thousand dollars ($2,000.00) for each violation. The county may bring a civil action for such violation or failure. Any civil penalties assessed by the court shall be paid into the Treasury of Bedford County, except that where the violator is the county or its agent, the court shall direct the penalty to be paid to the state treasury.

(h) With the consent of any person who has violated or failed, neglected or refused to obey any regulation or order of the administrator, or any condition of a permit or any provision of this article, the county may provide, in an order issued by the administrator against such persons, for the payment of civil charges for violations in specific sums not to exceed the limit specified in subsection (b) of this section. Such civil charges shall be instead of any appropriate civil penalty which could be imposed under subsections (b) or (f).

(i) Except when land-disturbance requiring a permit has begun without a permit, or when, in the opinion of the administrator, conditions pose an imminent danger to life, limb, property or to the waters of the commonwealth, this article shall be enforced in the following steps:

(1) Verbal or written notice of violation shall be issued listing the violations noted during inspection and the required corrective action.

(2) A notice to comply shall be issued when the following inspection reveals that the violations cited in the notice of violation have not been corrected. A notice to comply shall be issued either upon delivery in person or via certified mail, return receipt requested. Notice will allow five (5) days after receipt for implementation of the corrective actions.

(3) A stop work order shall be posted on the project site, requiring that all construction work on the site be stopped until the corrective measures noted in the notice to comply are implemented. The owner and/or person responsible for carrying out the plan, if not on-site at time of posting, will be notified by telephone of the order. As of this posting, all zoning and building permits will be temporarily suspended and no inspections will be provided for the project. A maximum period of seven (7) days after the receipt of the order shall be allowed to correct the violations. Upon the completion of the corrective actions, and issuance of a land-disturbing permit if so required, the stop work order is rescinded and zoning and building permits reinstated.

(4) Imposition of criminal or civil penalties. Either, but not both, of these penalties may be imposed if the seven-day period in the stop work order passes without the implementation of the necessary corrective actions. The timeframe for computing the number of days in violation shall not begin until the seven (7) days allowed for corrective action has expired unless work was not stopped as ordered.

(j) Compliance with the provisions of this article shall be prima facie evidence, in any legal or equitable proceeding for damages caused by erosion, siltation or sedimentation, that all requirements of law have been met and the complaining party must show negligence in order to recover any damages.

(Ord. No. O060914-06, 6-9-2014)

Sec. 7-12. - Appeals.

(a) Final decisions of the administrator under this article shall be subject to review by the board, provided an appeal is filed within thirty (30) days from the date of any written decision by the administrator which adversely affects the rights, duties or privileges of the person engaging in or proposing to engage in land-disturbing activities.

(b) Final decisions of the county under this article shall be subject to review by the Circuit Court of Bedford County, provided that an appeal is filed within thirty (30) days from the date of any written decision adversely affecting the rights, duties, or privileges of the person engaging in or proposing to engage in land-disturbing activities.

(c) Final decisions of the board either upon its own action or upon the review of the action of the administrator shall be subject to judicial review in accordance with the provisions of the Administrative Process Act.

(Ord. No. O060914-06, 6-9-2014)

Secs. 7-13—7-25. - Reserved.