BEDFORD REGIONAL WATER AUTHORITY
BEDFORD, VA

SMITH MOUNTAIN LAKE WTP &
RAW WATER PUMPING STATION / INTAKE

PROJECT MAP
NO SCALE

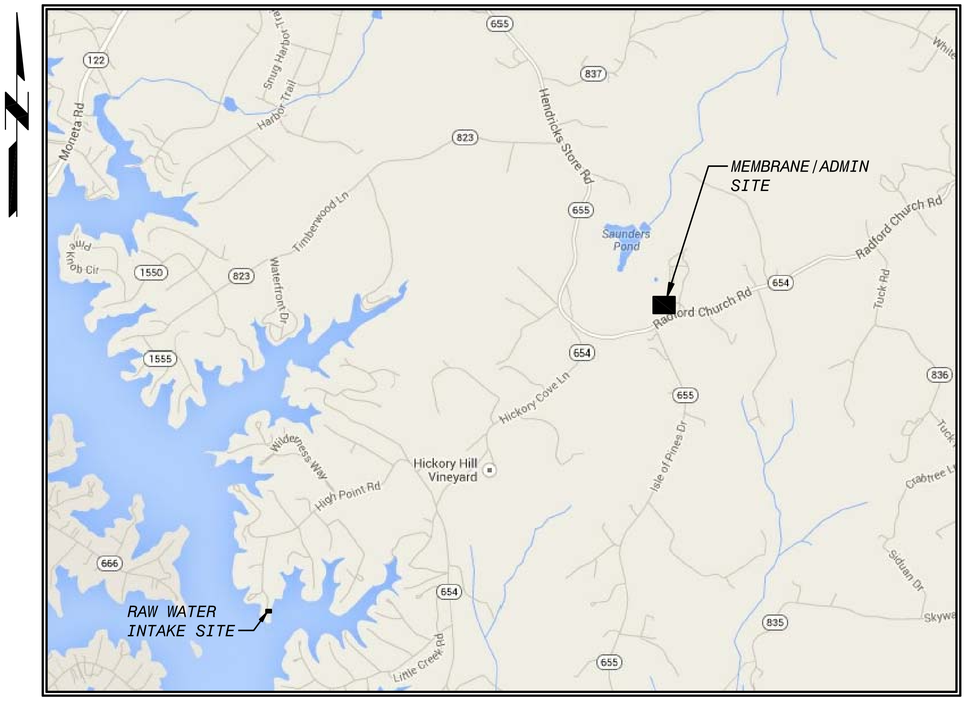

SITE LOCATION MAP
NO SCALE

PROJECT NO. 182262
LEVEL 2 SUBMITTAL
FEBRUARY 2015

GENERAL

G-00-001	COVER SHEET AND LOCATION MAPS
G-00-002	SHEET LIST
G-00-004	GENERAL NOTES
G-00-005	ABBREVIATIONS
G-00-006	LEGEND
G-00-007	CODE INFORMATION
G-00-008	HYDRAULIC PROFILE - MAIN PROCESS
G-00-010	PROCESS FLOW DIAGRAM

DEMOLITION

D-20-001	RAW WATER PUMP STATION ELECTRICAL BUILDING - DEMOLITION SITE PLAN AND DETAILS
D-20-002	RAW WATER PUMP STATION - PLAN AND SECTION

CIVIL

C-00-501	EROSION AND SEDIMENT CONTROL DETAILS
C-20-101	RAW WATER PUMP STATION - SITE PLAN
C-20-102	RAW WATER PUMP STATION - GRADING PLAN
C-20-301	RAW WATER PUMP STATION - PIPING PROFILE
C-30-101	MEMBRANE/ADMIN BUILDING - SITE PLAN
C-30-102	MEMBRANE/ADMIN BUILDING - GRADING PLAN
C-30-103	MEMBRANE/ADIM BUILDING - YARD PIPING AND UTILITY PLAN
C-30-104	MEMBRANE/ADMIN BUILDING - LANDSCAPING PLAN
C-30-301	MEMBRANE/ADMIN BUILDING - YARD PIPING PROFILES - SHEET 1 OF 2
C-30-302	MEMBRANE/ADMIN BUILDING - YARD PIPING PROFILES - SHEET 2 OF 2
C-30-501	DETAILS
C-30-502	DETAILS
C-30-503	DETAILS
C-30-504	DETAILS
C-30-505	DETAILS
C-30-506	EROSION AND SEDIMENT CONTROL DETAILS
C-30-507	EROSION AND SEDIMENT CONTROL DETAILS
C-30-508	DETAILS
C-30-509	DETAILS

STRUCTURAL

S-20-101	RAW WATER INTAKE PUMP STATION VAULT - PLAN, SECTIONS AND DETAIL
S-20-102	ELECTRICAL BUILDING - PLAN AND SECTION
S-20-501	DETAILS
S-20-301	RAW WATER PUMP STATION - SECTION
S-30-001	GENERAL NOTES AND DESIGN CRITERIA
S-30-102	MEMBRANE/ADMIN BUILDING - FOUNDATION/OPERATING FLOOR PLAN
S-30-301	MEMBRANE/ADMIN BUILDING - FOUNDATION SECTIONS
S-30-501	STANDARD DETAILS
S-30-502	STANDARD DETAILS
S-30-503	STANDARD DETAILS

ARCHITECTURAL

A-00-002	STANDARD DETAILS
A-30-101	MEMBRANE/ADMIN BUILDING - PARTIAL DETAIL REFERENCES PLAN
A-30-102	MEMBRANE/ADMIN BUILDING - OPERATING FLOOR PLAN
A-30-103	MEMBRANE/ADMIN BUILDING - ROOF PLAN
A-30-104	MEMBRANE/ADMIN BUILDING - REFLECTED CEILING PLAN
A-30-201	MEMBRANE/ADMIN BUILDING - BUILDING ELEVATIONS
A-30-202	MEMBRANE/ADMIN BUILDING - BUILDING ELEVATIONS
A-30-301	MEMBRANE/ADMIN BUILDING - BUILDING SECTIONS
A-30-401	MEMBRANE/ADMIN BUILDING - TOILET PLANS AND ELEVATIONS
A-30-601	MEMBRANE/ADMIN BUILDING - SCHEDULES AND DETAILS
A-30-602	MEMBRANE/ADMIN BUILDING - SCHEDULES AND DETAILS
A-30-801	MEMBRANE/ADMIN BUILDING - CASEWORK ELEVATIONS AND DETAILS

MECHANICAL

M-30-001	MEMBRANE/ADMIN BUILDING - OVERALL PERSPECTIVE
M-30-002	MEMBRANE/ADMIN BUILDING - PERSPECTIVES
M-30-101	MEMBRANE/ADMIN BUILDING - OPERATING FLOOR PLAN
M-30-301	MEMBRANE/ADMIN BUILDING - SECTIONS - SHEET 1 OF 5
M-30-302	MEMBRANE/ADMIN BUILDING - SECTIONS - SHEET 2 OF 5
M-30-303	MEMBRANE/ADMIN BUILDING - SECTIONS - SHEET 3 OF 5
M-30-304	MEMBRANE/ADMIN BUILDING - SECTIONS - SHEET 4 OF 5
M-30-305	MEMBRANE/ADMIN BUILDING - SECTIONS - SHEET 5 OF 5
M-30-401	MEMBRANE/ADMIN BUILDING - ENLARGED FLOOR PLAN A
M-30-402	MEMBRANE/ADMIN BUILDING - ENLARGED FLOOR PLAN B
M-30-403	MEMBRANE/ADMIN BUILDING - ENLARGED FLOOR PLAN C
M-30-404	MEMBRANE/ADMIN BUILDING - ENLARGED FLOOR PLAN D
M-30-501	DETAILS
M-30-502	DETAILS
M-30-503	DETAILS
M-30-504	DETAILS
M-30-505	DETAILS
M-30-506	DETAILS
M-30-507	DETAILS
M-30-508	DETAILS
M-60-101	GAC CONTACTOR AND PUMP AREA - PLAN
M-80-101	FINISHED WATER STORAGE TANK - PLAN AND SECTION
M-85-101	RAW WATER STORAGE TANK - PLAN AND SECTION
M-90-101	FLOW METER VAULT - PLANS, SECTIONS AND DETAILS
M-95-101	CHEMICAL VALVE VAULT - PLAN, SECTION AND DETAILS

HVAC

H-00-001	LEGEND, ABBREVIATIONS AND SYMBOLS
H-30-101	MEMBRANE/ADMIN BUILDING - FIRST FLOOR DUCTWORK PLAN - BASE BID
H-30-102-A	MEMBRANE/ADMIN BUILDING - FIRST FLOOR DUCTWORK PLAN - ALTERNATE
H-30-103	MEMBRANE/ADMIN BUILDING - CODED NOTES
H-30-501	MEMBRANE/ADMIN BUILDING - DETAILS
H-30-502	MEMBRANE/ADMIN BUILDING - DETAILS
H-30-503	MEMBRANE/ADMIN BUILDING - BASE BID DIAGRAMS
H-30-504	MEMBRANE/ADMIN BUILDING - ALTERNATE PLAN DIAGRAMS
H-30-601	MEMBRANE/ADMIN BUILDING - SCHEDULES
H-30-602	MEMBRANE/ADMIN BUILDING - SCHEDULES
H-30-603	MEMBRANE/ADMIN BUILDING - SCHEDULES
H-30-604	MEMBRANE/ADMIN BUILDING - SCHEDULES

PLUMBING

P-001	LEGEND, DETAILS AND SCHEDULES
P-101	ADMIN BUILDING - OPERATING FLOOR DRAINAGE AND VENT PIPING PLAN
P-30-102	MEMBRANE BUILDING - OPERATING FLOOR DRAINAGE AND VENT PIPING PLAN
P-103	MEMBRANE/ADMIN BUILDING - OPERATING FLOOR POTABLE PIPING PLAN

INSTRUMENTATION

I-00-001	P&ID - LEGEND AND ABBREVIATIONS - SHEET 1 OF 3
I-00-002	P&ID - LEGEND AND ABBREVIATIONS - SHEET 2 OF 3
I-00-003	P&ID - LEGEND AND ABBREVIATIONS - SHEET 3 OF 3
I-00-004	P&ID - CONTROL BLOCK DIAGRAM
I-00-005	P&ID - RAW WATER STORAGE TANK
I-00-006	P&ID - SODIUM HYPOCHLORITE SYSTEM STORAGE TANKS
I-00-007	P&ID - SODIUM HYPOCHLORITE SYSTEM PRE-CLEARWELL FEED
I-00-008	P&ID - SODIUM HYPOCHLORITE SYSTEM POST-CLEARWELL FEED
I-00-009	P&ID - FINISHED WATER CLEARWELL
I-00-010	P&ID - HIGH SERVICE PUMP STATION
I-00-011	P&ID - GAC CONTACTOR
I-00-012	P&ID - FIRST STAGE MEMBRANE BACKWASH TREATMENT SYSTEM
I-00-013	INSTRUMENT INSTALLATION DETAILS - SHEET 1 OF 3
I-00-014	INSTRUMENT INSTALLATION DETAILS - SHEET 2 OF 3
I-00-015	INSTRUMENT INSTALLATION DETAILS - SHEET 3 OF 3
I-01-001	P&ID - LEGENDS AND ABBREVIATIONS - SHEET 1 OF 3
I-01-002	P&ID - LEGENDS AND ABBREVIATIONS - SHEET 2 OF 3
I-01-003	P&ID - LEGENDS AND ABBREVIATIONS - SHEET 3 OF 3
I-01-004	P&ID - CONTROL BLOCK DIAGRAM
I-01-005	P&ID - RAW WATER PUMP STATION - PUMP STATION
I-01-006	P&ID - RAW WATER PUMP STATION - INSTALLATION DETAILS

ELECTRICAL

E-00-001	LEGEND AND ABBREVIATIONS
E-20-101	RAW WATER PUMP STATION - SITE PLAN
E-20-401	RAW WATER PUMP STATION - POWER PLAN
E-20-402	RAW WATER PUMP STATION - LIGHTING PLAN
E-20-501	RAW WATER PUMP STATION - LIGHTING FIXTURE & PANELBOARD SCHEDULES AND DETAILS
E-20-701	MAIN SWITCHBOARD & PLC ONE-LINE DIAGRAMS
E-30-101	MEMBRANE/ADMIN BUILDING - SITE PLAN
E-30-102	MEMBRANE/ADMIN BUILDING - SITE LIGHTING PLAN
E-30-401	MEMBRANE/ADMIN BUILDING - PARTIAL POWER PLAN
E-30-402	MEMBRANE/ADMIN BUILDING - PARTIAL POWER PLAN
E-30-403	MEMBRANE/ADMIN BUILDING - PARTIAL POWER PLAN
E-30-404	MEMBRANE/ADMIN BUILDING - LIGHTING PLAN
E-30-405	MEMBRANE/ADMIN BUILDING - CONVENIENCE POWER AND SYSTEMS PLAN
E-30-406	MEMBRANE/ADMIN BUILDING - LIGHTING FIXTURE SCHEDULE
E-30-501	MEMBRANE/ADMIN BUILDING - DETAILS
E-30-701	MEMBRANE/ADMIN BUILDING - MCC-1 ONE-LINE DIAGRAM
E-30-702	MEMBRANE/ADMIN BUILDING - MCC-1 ONE-LINE DIAGRAM

PRELIMINARY - NOT FOR CONSTRUCTION

DATE	REVISIONS AND RECORD OF ISSUE	NO.	BY	CK	APP
02/20/15	GMP DRAWINGS	A			

50.3010 - General and Demo Drawings
G-00-002.dwg
XREF1:BORDER.dwg
SAVED:KOE49353, 3/5/2015 3:03:15 PM
XREF2:
PLOTTED:
XREF3:
USER:KOE49353
DWG VER:GMP Pricing
XREF4:

BLACK & VEATCH
Building a world of difference.
Black & Veatch Corporation
Virginia Beach, VA

BEDFORD REGIONAL WATER AUTHORITY
SMITH MOUNTAIN LAKE WTP &
RAW WATER PUMPING STATION / INTAKE

GENERAL
SHEET LIST

DESIGNED:
DETAILED:
CHECKED:
APPROVED:
DATE:

0 1/2 1
IF THIS BAR DOES NOT MEASURE 1" THEN DRAWING IS NOT TO FULL SCALE

PROJECT NO.
182262

G-00-002
SHEET
OF

FD7000_PW
D7000

GENERAL NOTES

1. HORIZONTAL CONTROL: COORDINATES ARE BASED ON (Designer insert the basis of the control datum.). COORDINATES ON STRUCTURES DEPICT THE EXTERIOR FACE OF THE CONCRETE SUBSTRUCTURE FOUNDATION WALL OR FOOTING WALL.

2. VERTICAL CONTROL: ELEVATIONS ARE BASED ON (Designer insert the basis of the control datum.). BENCHMARKS AND/OR STRUCTURE ELEVATIONS FROM EXISTING SURVEYS OR REFERENCE DRAWINGS MAY RESULT IN VARIANCES WITH ELEVATIONS INDICATED ON THE DRAWINGS FOR EXISTING FACILITIES. (Designer should indicate here the example of any known differences between datum basis. include individual benchmark reference information in the project specific notes or at the appropriate location on the drawings.)

3. THE PROJECTED 100 YEAR FLOOD ELEVATION IS (Designer insert data) AND THE PROJECTED 500 YEAR FLOOD ELEVATION IS (Designer to insert data).

4. EXISTING UTILITIES AND STRUCTURES (UNDERGROUND, SURFACE, OR OVERHEAD) ARE INDICATED ONLY TO THE EXTENT THAT SUCH INFORMATION WAS KNOWN, OR MADE AVAILABLE TO, OR DISCOVERED BY THE ENGINEER IN PREPARING THE DRAWINGS. THE LOCATIONS, CONFIGURATIONS, AND ELEVATIONS OF SUBSURFACE FACILITIES AND UTILITIES ARE APPROXIMATE, AND NOT ALL UTILITIES AND FACILITIES MAY BE INDICATED. OVERHEAD UTILITIES ARE NOT INDICATED IN ARCHITECTURAL ELEVATIONS, PROFILE OR SECTION DRAWINGS. THE ENGINEERING INVESTIGATIONS, LOCATION, AND DESIGNATION OF SUBSURFACE UTILITIES INDICATED IN THESE CONTRACT DOCUMENTS HAS BEEN PERFORMED TO QUALITY LEVEL C IN ACCORDANCE WITH GENERALLY ACCEPTED ENGINEERING PRINCIPLES AND PRACTICES AS OUTLINED IN ASCE STANDARD AND GUIDELINE BULLETIN CI/ASCE 38-02 UNLESS OTHERWISE DESIGNATED. WHERE SUCH ACTIVITIES HAVE BEEN TO A HIGHER LEVEL OF QUALITY, THE HIGHER QUALITY LEVEL FOR THE AFFECTED AREAS IS INDICATED IN THE CONTRACT DOCUMENTS.

5. "SCREENED" (LIGHT) DELINEATION INDICATED ON THE DRAWINGS DENOTES EXISTING FACILITIES. "SCREENED" INFORMATION WAS TAKEN FROM EXISTING CONSTRUCTION DRAWINGS AND DATA, IS FOR REFERENCE ONLY, AND SHALL BE FIELD VERIFIED BY THE CONTRACTOR PRIOR TO THE ORDERING OF MATERIALS AND BEGINNING OF CONSTRUCTION. "BOLD" DELINEATION IS NEW WORK TO BE CONSTRUCTED UNDER THIS CONTRACT.

6. CONTRACTOR'S STAGING, PARKING AND MATERIAL STORAGE SHALL BE LIMITED TO THE SPACE(S) DESIGNATED ON THE DRAWINGS. PROVIDING ADDITIONAL STORAGE OR PARKING SHALL BE THE RESPONSIBILITY OF THE CONTRACTOR.

7. CALL BEFORE YOU DIG. CONTRACTOR SHALL VERIFY PRECISE LOCATIONS AND ELEVATIONS OF ALL UTILITIES AND STRUCTURES, WHETHER INDICATED ON THE DRAWINGS OR NOT, IN THE FIELD IN ADVANCE OF EXCAVATING, BY CONTACTING ALL UTILITIES AND OTHER AGENCIES, AND BY PROSPECTING. CONTRACTOR SHALL BE RESPONSIBLE FOR REMOVAL, DEMOLITION, RECONSTRUCTION, AND RECONNECTION OF EXISTING FACILITIES AS REQUIRED TO COMPLETE THE WORK. IF REQUIRED AFTER FIELD VERIFICATION, CONTRACTOR SHALL COORDINATE WITH THE ENGINEER TO DETERMINE ANY NECESSARY MODIFICATIONS TO PROPOSED NEW WORK.

8. BEFORE CONSTRUCTION IS STARTED, CONTRACTOR SHALL COORDINATE WITH THE OWNER OF EACH UTILITY AND DEFINE THE REQUIREMENTS AND METHODS TO ACCOMMODATE THE PROTECTION, TEMPORARY SUPPORT, ADJUSTMENT, OR RELOCATION OF ANY UTILITIES AFFECTED BY THE PROPOSED NEW WORK.

9. CONTRACTOR SHALL COMPLY WITH THE GOVERNING AGENCY NPDES CONSTRUCTION REQUIREMENTS, AND SHALL PROVIDE APPROPRIATE MITIGATION MEASURES OR PROTECTION AND RESTORATION AT ALL LOCATIONS AS REQUIRED BY THEIR OPERATIONS, AND AS DIRECTED BY ENGINEER. SPECIAL CONSTRUCTION REQUIREMENTS, TEMPORARY PROTECTIVE FENCING OR BARRICADES, SHEETING, SHORING, EROSION PROTECTION, AND SURFACE RESTORATION AT CERTAIN LOCATIONS ARE INDICATED ON THE DRAWINGS TO BRING CONTRACTOR'S ATTENTION TO SENSITIVE AREAS.

10. THE CONTRACTOR SHALL BE RESPONSIBLE FOR THE PROTECTION OF ALL PROPERTY CORNER MARKERS. PROPERTY CORNER MARKERS DAMAGED BY CONSTRUCTION ACTIVITIES SHALL BE REESTABLISHED BY A PROFESSIONAL SURVEYOR LICENSED IN THE STATE OF VIRGINA.

11. THE LOCATION OF TEST HOLES INDICATED ON THE DRAWINGS IS APPROXIMATE. CONTRACTOR SHALL REFER TO THE GEOTECHNICAL REPORT FOR ACTUAL TEST HOLE LOCATIONS AND THE FINDINGS OF THE GEOTECHNICAL INVESTIGATIONS.

12. CONTRACTOR SHALL PROTECT AND MAINTAIN ALL EXISTING TREES, SHRUBS, AND PLANTS UNLESS OTHERWISE NOTED.

13. CONTRACTOR SHALL INSTALL ALL PIPELINES, PAVING, WALKWAYS, AND CURB AND GUTTER AT A UNIFORM GRADE BETWEEN ELEVATIONS DEPICTED ON THE DRAWINGS.

14. FOR ALL SITE GRADING, SMOOTH PARABOLIC TRANSITIONS SHALL BE MADE BETWEEN CHANGES IN SLOPE. PARABOLIC ROUNDING SHALL APPLY TO ALL CUT AND FILL SECTIONS.

15. FINISHED GRADE ELEVATION AT THE BUILDING FACE, WHERE NOT ADJACENT TO PAVEMENT, SHALL BE APPROXIMATELY 6 INCHES BELOW FINISHED FLOOR ELEVATION UNLESS OTHERWISE NOTED. FINISHED GRADE ELEVATION ADJACENT TO BASINS SHALL BE APPROXIMATE AS INDICATED BY CONTOURS, OR AS REQUIRED TO MEET STAIR LANDINGS.

16. THE CONTRACTOR'S OPERATIONS SHALL CONFORM TO THE RULES AND REGULATIONS OF THE STATE CONSTRUCTION SAFETY ORDERS PERTAINING TO EXCAVATION AND TRENCHING.

17. RESTRAINED JOINTS SHALL BE PROVIDED FOR BURIED PIPING AS INDICATED ON THE DRAWINGS AND/OR AS SCHEDULED IN THE SPECIFICATIONS.

18. THE DRAWINGS INDICATE TYPES OF PIPE SUPPORT SYSTEMS AT VARIOUS LOCATIONS. HOWEVER, All PIPE SUPPORTS, HANGERS, BRACKETS, INSERTS OR BRACES ARE NOT SHOWN. CONTRACTOR SHALL REFER TO THE SPECIFICATIONS AND PROVIDE A COMPLETE SUPPORT SYSTEM AS REQUIRED.

19. THE TERM "PROPOSED" AS INDICATED ON THE DRAWINGS MEANS THE ITEM IS DESIGNED OR PLANNED TO BE PROVIDED BY OWNER OR OTHERS SEPARATE FROM THIS CONTRACT. THE TERM "FUTURE" AS INDICATED ON THE DRAWINGS REFERS TO THE ENGINEER'S INTERPRETATION OF THE ITEM FOR THE FUTURE, BASED ON AVAILABLE INFORMATION.

20. THE EXISTING PROCESS FACILITIES SHALL REMAIN IN OPERATION CONTINUOUSLY THROUGHOUT THE CONSTRUCTION ACTIVITIES. INDIVIDUAL PROCESS FACILITIES CAN BE TAKEN OUT OF SERVICE FOR LIMITED PERIODS OF TIME TO FACILITATE CONSTRUCTION AS SPECIFIED IN THE CONTRACT DOCUMENTS.

21. STRUCTURES SUCH AS CURBS AND GUTTERS, CONCRETE AND ASPHALT DRIVES AND WALKWAYS, PAVING BRICKS, FENCING, RETAINING WALLS, ETC., CROSSED BY THE PIPELINE ARE NOT ALL INDICATED IN PROFILE. CONTRACTOR SHALL RESTORE ANY EXISTING STRUCTURES THAT ARE DISTURBED, DAMAGED OR REMOVED BY CONSTRUCTION.

22. CONTRACTOR SHALL REPLACE EXISTING PIPE CULVERTS THAT ARE REMOVED TO INSTALL THE NEW PIPELINE WITH NEW PIPE CULVERTS OF THE SAME SIZE, MATERIAL AND CONSTRUCTION AT THE SAME LOCATION AND INVERT ELEVATION AS THOSE THAT WERE REMOVED, AND SHAPE THE DITCH TO DRAIN WITH THE REPLACED CULVERT. CONTRACTOR SHALL PROVIDE ANY TEMPORARY CULVERTS THAT MAY BE REQUIRED FOR CONTRACTOR'S OPERATIONS. CONTRACTOR SHALL COORDINATE REMOVAL AND REPLACEMENT OF ANY CULVERTS WITHIN PUBLIC RIGHT-OF-WAY WITH THE REGULATING AGENCY.

23. HORIZONTAL STATIONING ALONG ANY PIPELINE ALIGNMENT IS FOR LEVEL LINE MEASUREMENT AND FOR PAYMENT OF THE PIPELINES. CONTRACTOR SHALL PROVIDE THE ACTUAL PIPE LENGTH TO BE DETERMINED BY THE SLOPE OR CURVE ON WHICH THE PIPE IS INSTALLED.

24. UNLESS OTHERWISE SPECIFIED, INDICATED ON THE DRAWINGS, OR DIRECTED BY THE ENGINEER, INSTALL ALL PIPELINES SLOPING DOWNWARD FROM AN AIR VALVE MINIMUM _'-_" COVER AT MANHOLE OR AT MANUAL ARV TO A BLOWOFF, AND PROVIDE THE SPECIFIED MINIMUM PIPE COVER. MINIMUM PIPE COVER SHALL BE FROM THE EXISTING, PROPOSED, OR FUTURE GROUND SURFACE OR ROAD PROFILE, WHICHEVER GROUND SURFACE OR ROAD PROFILE IS APPLICABLE AS INDICATED ON THE DRAWINGS. IF THE PROPOSED GROUND SURFACE IS ABOVE THE EXISTING GROUND SURFACE INDICATED ON THE DRAWINGS AND IS NOT THE ACTUAL GROUND SURFACE AT THE TIME OF PIPELINE INSTALLATION, INSTALL THE PIPELINE TO PROVIDE MINIMUM PIPE COVER FROM THE ACTUAL GROUND SURFACE IF ACCEPTABLE TO THE ENGINEER. HIGH POINTS IN THE PIPELINE WILL NOT BE PERMITTED EXCEPT AT LOCATIONS OF AIR VALVES AS INDICATED ON THE DRAWINGS. REVIEW THE PIPELINE PROFILE REQUIREMENTS WITH THE ENGINEER PRIOR TO PREPARING LAYING SCHEDULES AND PERFORMING FIELD STAKING.

25. CONTRACTOR SHALL FIELD VERIFY PRECISE LOCATION, ELEVATION, AND ARRANGEMENT OF CONNECTIONS OF NEW PIPELINES WITH EXISTING PIPELINES BASED ON FIELD CONDITIONS, INCLUDING EXPOSING EXISTING PIPING PRIOR TO FABRICATING NEW PIPING. CONTRACTOR SHALL PROVIDE FITTINGS, ADAPTERS, SOLID SLEEVE CLOSURES, AND HARNESSED MECHANICAL COUPLING; ROTATE FITTINGS; DEFLECT JOINTS; AND MODIFY EXISTING PIPING AS APPLICABLE AND AS REQUIRED TO MAKE CONNECTIONS, INCLUDING ADJUSTMENTS FOR ANY OFFSETS IN CENTERLINE ELEVATIONS BETWEEN PIPELINES. CONTRACTOR SHALL PROVIDE TEMPORARY PLUG WITH FACTORY OUTLET SIZED AS REQUIRED FOR CONTRACTOR'S TESTING AND DISINFECTION WORK BEFORE MAKING CONNECTION, WHEN APPLICABLE. CONTRACTOR SHALL COORDINATE MAKING EACH CONNECTION WITH THE OWNER.

PRELIMINARY - NOT FOR CONSTRUCTION

NO.	BY	CK	APP	DATE	REVISIONS AND RECORD OF ISSUE
A				02/20/15	GMP DRAWINGS

50.3010 - General and Demo Drawings
G-00-004.dwg
XREF1:BORDER.dwg
SAVED: KOE49353, 2/25/2015 6:44:52 AM
XREF2:
PLOTTED:
XREF3:
USER: KOE49353
DWG VER: GMP Pricing
XREF4:

BLACK & VEATCH
Building a world of difference.
Black & Veatch Corporation
Virginia Beach, VA

BEDFORD REGIONAL WATER AUTHORITY
SMITH MOUNTAIN LAKE WTP &
RAW WATER PUMPING STATION / INTAKE

GENERAL
GENERAL NOTES

DESIGNED:
DETAILED:
CHECKED:
APPROVED:
DATE:

0 1/2 1
IF THIS BAR DOES NOT MEASURE 1" THEN DRAWING IS NOT TO FULL SCALE

PROJECT NO.
182262

G-00-004
SHEET
OF

FD7000_PW
D7000

A	ACID, AMBER INDICATING LIGHT,AMP
AB	ANCHOR BOLT
ABS	ACID BATH SINK
AC	ALTERNATING CURRENT
A/C	AIR CONDITIONER, (ING)
ACP	ASBESTOS CEMENT PIPE
ACST	ACOUSTIC, (AL
AD	ACCESS DOOR, AREA DRAIN, AIR DAMPER, ANODE
ADD	ADDITIONAL
ADH	ADHESIVE
ADJ	ADJUSTABLE, ADJACENT
ADMIN	ADMINISTRATION
AF	AIR FLOW
AFF	ABOVE FINISH FLOOR
AH	AHEAD
AHU	AIR HANDLING UNIT
AL	ACTIVE LEAF
ALT	ALTERNATE, (IVE)
ALUM	ALUMINUM
AM	AMMETER
AMP	AMPERE
ANOD	ANODIZED
AP	ACCESS PANEL
APPR	APPROACH
APPROX	APPROXIMATE, (LY)
AR	ALARM RELAY
ARCH	ARCHITECTURAL
AS	AMMETER SWITCH
ASSY	ASSEMBLY
AUTO	AUTOMATIC
AUX	AUXILIARY
AVS	AUTOMATIC VALVE STATION
AWG	AMERICAN WIRE GAGE
B	BEAM
B TO B	BACK TO BACK
BA	BEARING AREA
BAL	BALANCE
BAT	BATTERY
BC	BEGIN CURVE
BD	BOARD
BEJ	BRICK EXPANSION JOINT
BF	BLIND FLANGE
BHP	BRAKE HORSEPOWER
BITUM	BITUMINOUS
BKR	BREAKER
BLDG	BUILDING
BLK	BLOCK
BM	BENCHMARK
BOF	BOTTOM OF FOOTING
BOT	BOTTOM
BP	BACK PRESSURE
BPMK NO	BASEPLATE MARK NUMBER
BRG	BEARING
BRK	BRICK
BS	BOTH SIDES
B&S	BELL AND SPIGOT
BSMT	BASEMENT
BTU	BRITISH THERMAL UNIT
BTUH	BRITISH THERMAL UNIT-HOUR
BU	BELL-UP
BUR	BUILT UP ROOFING
BVC	BEGIN VERTICAL CURVE
C	COUNTER
C TO C	CENTER TO CENTER
CB	CATCH BASIN
CD	CEILING DIFFUSER
C/EJ	CONTRACTION/EXPANSION JOINT
CFM	CUBIC FEET PER MINUTE
C&G	CURB AND GUTTER
CHKD	CHECKERED
CI	CAST IRON
CIMH	CAST IRON MANHOLE
CIMHS	CAST IRON MANHOLE STEPS
CIP	CAST IRON PIPE
CISP	CAST IRON SOIL PIPE
CJT	CONTROL JOINT
CKT	CIRCUIT
CL	CLASS
C/L	CENTERLINE
CLG	CEILING
CLO	CLOSET
CLR	CLEAR, (ANCE)
CMP	CORRUGATED METAL PIPE
CMU	CONCRETE MASONRY UNIT
CO	CLEAN OUT, COMPANY
COD	CHEMICAL OXYGEN DEMAND
COL	COLUMN
COMB	COMBINATION
COMB SWR	COMBINED SEWER
COMP	COMPRESSOR, (ED)
CONC	CONCRETE
CONN	CONNECTION
CONST	CONSTRUCTION
CONT	CONTINUOUS, CONTINUATION, CONTROL
CONTR	CONTRACTOR
COR	CORNER
CORR	CORRIDOR, CORRUGATED
CP	CONTROL PANEL
CPLG	COUPLING
CPT	CONTROL POWER TRANSFORMER
CRS	COURSES, (ING)
CS	CONTROL SWITCH, CONTROL STATION, CUP SINK
CSK	COUNTERSUNK, (INK)
CT	CERAMIC TILE, CYCLE TIMER
CT	CURRENT TRANSFORMER
CTR(S)	CENTER(S)
CU	CUBIC
CU YD	CUBIC YARD
CW	COLD WATER
D	DOOR
DBL	DOUBLE
DC	DIRECT CURRENT
DEG	DEGREE
DEPT	DEPARTMENT
DET	DETAIL
DF	DRINKING FOUNTAIN
DH	DOOR HEIGHT
DI	DROP INLET, DUCTILE IRON
DIA	DIAMETER
DIFF	DIFFUSER
DIM	DIMENSION
DIP	DUCTILE IRON PIPE
DISCH	DISCHARGE
DISP	DISPENSER
DIST	DISTRIBUTION
DIV	DIVISION
DL	DEAD LOAD
DM	DAMPER MOTOR
DMJ	DOUBLE MECHANICAL JOINT
DN	DOWN
DO	DOOR OPENING, DISSOLVED OXYGEN
DPDT	DOUBLE POLE DOUBLE THROW
DR	DRAIN
DS	DOWNSPOUT
DT	DISTRIBUTION TRANSFORMER
DV	DRAIN VALVE
DWG(S)	DRAWING(S)
DWL(S)	DOWEL(S)
E	EAST, ELECTRICAL
EA	EACH
EAT	ENTERING AIR TEMPERATURE
EC	END CURVE
ECC	ECCENTRIC
ECC RED	ECCENTRIC REDUCER
EEW	EMERGENCY EYEWASH
EF	EACH FACE
EFF	EFFLUENT
EJ	EXPANSION JOINT
EL	ELEVATION
ELB	ELBOW
ELEC	ELECTRIC, (AL)
ELEV	ELEVATOR
EMER	EMERGENCY
ENC	ENCASEMENT
ENCL	ENCLOSURE|
ENT	ENTRANCE
EOL	END OF LINE
EQ	EQUAL
EQUIP	EQUIPMENT
EW	EACH WAY
EW	EMERGENCY EYEWASH
EWEF	EACH WAY EACH FACE
EXCH	EXCHANGER
EXH	EXHAUST
EXIST	EXISTING
EXP	EXPANSION, EXPOSED
EXP JT	EXPANSION JOINT
EXT	EXTENSION, EXTERIOR, EXTERNAL
F	FAN
F TO F	FACE TO FACE
FB	FACE BRICK
FC	FLEXIBLE CONNECTION, FLOW CONTROL
FCA	FLANGED COUPLING ADAPTER
FD	FLOOR DRAIN
FDN	FOUNDATION
FDPR	FIRE DAMPER
FE	FIRE EXTINGUISHER
FEC	FIRE EXTINGUISHER CABINET
FH	FLAT HEAD, FIRE HYDRANT
FHMS	FLAT HEAD MACHINE SCREW
FIG	FIGURE
FIN	FINISH
FIN GR	FINISH GRADE
FL	FLOOR, FLOW LINE
FLEX	FLEXIBLE
FLG	FLANGE, FLASHING
FM	FORCE MAIN
FO	FUEL OIL
FOB	FLAT ON BOTTOM
FOM	FACE OF MASONRY
FOS	FACE OF STUDS
FOT	FLAT ON TOP
FRP	FIBERGLASS REINFORCED PLASTIC
FS	FAR SIDE, FLOOR SLEEVE, FLOAT SWITCH
FT	FOOT
FTG	FOOTING
FURN	FURNISH, FURNISHED
FV	FLAP VALVE
FWD	FORWARD
G	GAS
GA	GAUGE
GAL	GALLON
GALV	GALVANIZED
GC/MS	GAS CHROMATOGRAPH/MASS SPECTROMETER
GEN	GENERAL, GENERATOR
GM	GAS METER
GPM	GALLONS PER MINUTE
GR	GRADE
GWB	GYPSUM WALLBOARD
GYP	GYPSUM
H	HIGH, HOUR, HYDROGEN
HB	HOSE BIBB
HC	HOLLOW CORE
HDR	HEADER
HE	HEAT EXCHANGER
HEX	HEXAGONAL
HF	HOSE FAUCET
HGT	HEIGHT
HH	HANDHOLE
HLS	HIGH LEVEL SWITCH
HMC	HARNESSED MECHANICAL COUPLING
HMD	HOLLOW METAL DOOR
HMJ	HARNESSED MECHANICAL JOINT
HORIZ	HORIZONTAL
HP	HIGH POINT, HORSEPOWER
HR	HOUR, HANDRAIL
HS	HIGH STRENGTH
HV	HOSE VALVE
HVAC	HEATING,VENTILATING AND AIR CONDITIONING
HW	HOT WATER
HWY	HIGHWAY
HYDRO	HYDROPNEUMATIC
I	INDICATOR
ID	INSIDE DIAMETER
IF	INSIDE FACE
I/I	CURRENT TO CURRENT BOOSTER
IN	INCHES
INC	INCORPORATED
INCL	INCLUDING
INCR	INCREASE
INST	INSTRUMENT, (ATION)
INSUL	INSULATE, (ED), (ING)
INT	INTERIOR, INTERNAL
INV	INVERT
IPS	IRON PIPE SIZE
JAN	JANITOR
JB	JUNCTION BOX
JF	JOINT FILLER
JT	JOINT
K	KIPS
KIT	KITCHEN
KO	KNOCK OUT
KS	KITCHEN SINK
KV	KILOVOLT
KVA	KILOVOLT AMPERE
KW	KILOWATT
KWH	KILOWATT HOUR
L	LOUVER
LAB	LABORATORY
LAM	LAMINATE(D)
LAT	LEAVING AIR TEMPERATURE
LAT	LATERAL
LAV	LAVATORY
LB(S)	POUNDS
LG	LENGTH, LONG
LH	LEFT HAND
LIN	LINEAL, LINEAR
LL	LIVE LOAD
LO	LOUVER OPENING
LS	LEVEL SWITCH
LT	LEFT, LAB TABLE
MA	MILLIAMPERE
MACH	MACHINE
MAINT	MAINTENANCE
MAN	MANUAL
MAS	MASONRY
MAX	MAXIMUM
MB	MACHINE BOLT
MC	MECHANICAL COUPLING
MCC	MOTOR CONTROL CENTER
MECH	MECHANICAL
MED	MEDIUM
MET	METAL
MEZ	MEZZANINE
MFM	MAGNETIC FLOWMETER
MFR(S)	MANUFACTURER(S)
MG	MILLION GALLONS
MGD	MILLION GALLONS PER DAY
MH	MANHOLE
MIN	MINIMUM, MINUTE
MISC	MISCELLANEOUS
MJ	MECHANICAL JOINT
MJRG	MECHANICAL JOINT RETAINER GLAND
MJTR	MECHANICAL JOINT WITH TIE ROD
MO	MASONRY OPENING, MOTOR OPERATED
MP	METERING PUMP
MRD	METAL ROOF DECK
MS	MACHINE SCREW
MSL	MEAN SEA LEVEL
MTD	MOUNTED
MTL	MATERIAL
MTR	MOTOR
N	NORTH
N/A	NOT APPLICABLE
NBC	NAIL IN BOTTLE CAP
NC	NORMALLY CLOSED
NEUT	NEUTRAL
NF	NEAR FACE
N.O.	NORMALLY OPEN
NO.(S)	NUMBER(S)
NOM	NOMINAL
NORM	NORMAL
NPT	NATIONAL PIPE THREAD
NPW	NONPOTABLE WATER
NS	NEAR SIDE
NTS	NOT TO SCALE
OC	ON CENTER, ODOR CONTROL
OD	OUTSIDE DIAMETER
OF	OUTSIDE FACE, OVERFLOW
OH	OVERHEAD
OL	OVERLOAD
OPER	OPERATING
OPNG	OPENING
OPP	OPPOSITE
OSL	OUTSTANDING LEG
OZ	OUNCE
PC	POINT OF CURVE
PCC	POINT OF COMPOUND CURVATURE
PCCP	PRESTRESSED CONCRETE CYLINDER PIPE
PCP	PIER CUTOFF POINT
PD	PLAN DIMENSION
PE	PLAIN END
PG	PRESSURE GAUGE
PH	PIPE HANGER, PENTHOUSE
PI	POINT OF INTERSECTION
PIVC	POINT OF INTERSECTION ON VERTICAL CURVE
PL	PLATE
PLYWD	PLYWOOD
PNL(S)	PANEL(S)
POLY	POLYMER
POT	POINT ON TANGENT
PP	POWER POLE
PR	PAIR
PROJ	PROJECTION
PRS	PRESSURE REDUCING STATION
PRV	POWER ROOF VENTILATOR
PS	PIPE SUPPORT
PSF	POUNDS PER SQUARE FOOT
PSI	POUNDS PER SQUARE INCH
PT	POINT, POINT OF TANGENCY
PVC	POLYVINYL CHLORIDE, POINT ON VERTICAL CURVE
PVCP	POLYVINYL CHLORIDE PIPE
PVMT	PAVEMENT
PW	POTABLE WATER
R	RADIUS, RISER
RAS	RETURN ACTIVATED SLUDGE
RCP	REINFORCED CONCRETE PIPE
RCCP	REINFORCED CONCRETE CYLINDER PIPE
RCHEP	REINFORCED CONCRETE HORIZONTAL ELLIPTICAL PIPE
RD	ROOF DRAIN, ROAD
RDL	ROOF DRAIN LEADER
RECEP	RECEPTION
RECIRC	RECIRCULATING
RECP	RECEPTACLE
RED	REDUCER, REDUCING
REG	REGULATOR, REGULATING
REF	REFERENCE
REFR	REFRIGERATION, REFRIGERATOR
REINF	REINFORCING
REM	REMOVABLE
REQD	REQUIRED
RET	RETURN
REV	REVISION, REVISED, REVERSED
RFG	ROOFING
RG	RETAINER GLAND
RH	ROOF HOOD, RIGHT HAND, ROUND HEAD, RED HEAD
RHMS	ROUND HEAD MACHINE SCREW
RHWS	ROUND HEAD WOOD SCREW
RM	ROOM
RO	ROUGH OPENING
RPM	REVOLUTIONS PER MINUTE
RR	RAILROAD
RS	RAW SLUDGE, RAW SEWAGE, ROLLED STEEL
RT	RIGHT
R/W	RIGHT OF WAY
S	SOUTH, SPEAKER
SAN SWR	SANITARY SEWER
SCHED	SCHEDULE
SD	STORM DRAIN, SOAP DISH
SEC	SECOND
SECT	SECTION
SER SK	SERVICE SINK
SG	SLUICE GATE, SUPPLY GRILLE
SH	SHEET
SHR	SHOWER
SHD	SHOWER DOOR
SIM	SIMILAR
SKL	SKYLIGHT
SM	SHEET METAL
SP	SUMP PUMP
SPA	SPACING, SPACES
SPEC(S)	SPECIFICATION(S)
SPLY	SUPPLY
SQ	SQUARE
SR	SUPPLY REGISTER
SS	STAINLESS STEEL
SS	SANITARY SEWER
SSK	SERVICE SINK
ST	SELF TAPPING
ST SWR	STORM SEWER
STA	STATION
STD	STANDARD
STL	STEEL
STOR	STORAGE
STR	STRUCTURAL
SUP	SUPPLY
SUSP	SUSPENDED
SV	SHUTOFF VALVE
SW	SWITCH
SWBD	SWITCHBOARD
SWGR	SWITCHGEAR
SWS	SEAL WATER SOLENOID
SYM	SYMMETRICAL
SYS	SYSTEM
T	THERMOSTAT, TREAD, TOTALIZER
T	TRANSFORMER, TELEPHONE, TOP
TAN	TANGENT
TB	TERMINAL BOX
T&B	TOP AND BOTTOM
TBE	THREAD BOTH ENDS
TBM	TEMPORARY BENCHMARK
TC	TOWEL CABINET, TOP OF CURB
TC	TERMINAL CABINET
TEL	TELESCOPING
TEMP	TEMPERATURE, TEMPORARY
TERM	TERMINAL
T&G	TONGUE & GROOVE
TH	TEST HOLE
THK	THICK, THICKNESS
THR	THRESHOLD
TI	TOTALIZING INDICATOR, TEMPERATURE INDICATOR
TIR	TOTALIZING INDICATING RECORDER
TOF	TOP OF FOOTING
TOM	TOP OF MASONRY
TOS	TOP OF STEEL
TP	TWISTED PAIR COUPLE, TOWEL PIN
TRANS	TRANSFORMER, TRANSMITTER, TRANSFER
TS	TEMPERATURE SWITCH
TV	TELEVISION
TYP	TYPICAL
UDM	ULTRASONIC DENSITY METER
UGND	UNDERGROUND
UH	UNIT HEATER
UNO	UNLESS NOTED OTHERWISE
UR	URINAL
USGS	UNITED STATES GEOLOGICAL SURVEY
V	VALVE, VOLT, VENT
VAC	VACUUM
VAT	VINYL ASBESTOS TILE
VBF	VALVE, AWWA BUTTERFLY
VBI	VALVE, INDUSTRIAL BUTTERFLY
VBL	VALVE, BALL
VBM	VALVE, BALL MISCELLANEOUS
VC	VERTICAL CURVE, VICTAULIC COUPLING
VCD	VERTICAL CONTROL DAMPER
VCK	VALVE, CHECK
VCN	VALVE, CONE
VCP	VITRIFIED CLAY PIPE
VG	VALVE, GATE
VGD	VALVE, DOUBLE DISC GATE
VGL	VALVE, GLOBE
VERT	VERTICAL
VF	VACUUM FILTER
VIB	VIBRATION
VKG	VALVE, KNIFE GATE
VM	VOLT METER
VNR	VENEER
VPC	VALVE, PRESSURE REGULATING
VPG	VALVE, PLUG
VPL	VALVE, ECCENTRIC PLUG
VPR	VALVE, PRESSURE REDUCING
VSP	VALVE, PRESSURE RELIEF
VSPV	VALVE, PRESSURE/VACUUM RELIEF
VSV	VALVE, VACUUM RELIEF
VV	VENT VALVE
VVB	VACUUM BREAKER
W	WEST, WIDE, WINDOW, WATT, WATER
W/	WITH
WAS	WASTE ACTIVATED SLUDGE
WB	WALLBOARD
WC	WATER CLOSET
WD	WOOD, WIDTH
WF	WALL FITTING
WH	WALL HYDRANT
WL	WATER LEVEL
WM	WATER METER, WATTMETER
WO	WINDOW OPENING
W/O	WITHOUT
WOM	WOMEN
WP	WATERPROOF, WORKING POINT
WR	WASTE RECEPTACLE
WS	WATERSTOP
WT	WEIGHT
WW	WETWELL
WWF	WELDED WIRE FABRIC
x	BY,TIMES
YH	YARD HYDRANT
&	AND
@	AT
<	DEFLECTION ANGLE
#	NUMBER
%	PER CENT

PRELIMINARY - NOT FOR CONSTRUCTION

DATE	REVISIONS AND RECORD OF ISSUE	NO.	BY	CK	APP
02/20/15	GMP DRAWINGS	A			

50.3010 - General and Demo Drawings
G-00-005.dwg
XREF1:BORDER.dwg
SAVED:KOE49353, 4/30/2014 7:53:50 AM
XREF2:
PLOTTED:
XREF3:
USER:KOE49353
DWG VER:GMP Pricing
XREF4:

BLACK & VEATCH
Building a world of difference.

Black & Veatch Corporation
Virginia Beach, VA

BEDFORD REGIONAL WATER AUTHORITY
SMITH MOUNTAIN LAKE WTP &
RAW WATER PUMPING STATION / INTAKE

GENERAL
ABBREVIATIONS

DESIGNED:
DETAILED:
CHECKED:
APPROVED:
DATE:

0 1/2 1
IF THIS BAR DOES NOT MEASURE 1" THEN DRAWING IS NOT TO FULL SCALE

PROJECT NO.
182262

G-00-005
SHEET
OF

FD7000_PW
D7000

GENERAL LEGEND

- SURFACED STREET, ROAD OR DRIVE
- SURFACED STREET, ROAD OR DRIVE WITH CURBS
- NON-SURFACED STREET, ROAD OR DRIVE
- CONCRETE WALK
- CB — CATCH BASIN
- MANHOLE
- DRAINAGE COURSE OR FLOW LINE
- 326 — EXISTING GROUND CONTOUR
- 326 — FINISH GRADE CONTOUR
- BANK OR SLOPE LINES
- #3 OR T.H.#3 B3 — TEST HOLE AND NUMBER
- SURVEY LINE WITH PI, PT, OR POT
- CONCRETE ENCASEMENT-PLAN
- CONCRETE REACTION BLOCKING AT BEND, PLUG OR TEE
- DRAINS OR CULVERTS
- TUNNEL CASING - PLAN
- SMALLER THAN 24" / 24" AND LARGER — EXISTING
- GENERAL LAYOUT YARD PIPING
- SMALLER THAN 24" / 24" AND LARGER — NEW
- NEW WATER LINE OR SEWER IN PROFILE
- NON-CONNECTING PIPING
- CE/L — CONSTRUCTION EASEMENT LINE
- E/L — EASEMENT LINE
- R/W — RIGHT-OF-WAY LINE
- PL — PROPERTY LINE
- PE/L — PERMANENT EASEMENT LINE
- TE/L — TEMPORARY EASEMENT LINE
- UE/L — UTILITY EASEMENT LINE
- S/L — SURVEY LINE SECTION LINE
- W — WATER LINE
- G — GAS LINE
- T — TELEPHONE (UNDERGROUND)
- E — ELECTRICAL (UNDERGROUND)
- P — T — POWER OR TELEPHONE LINES (OVERHEAD)
- (G) (W) — WATER OR GAS VALVE
- (WM) (GM) — WATER OR GAS METER
- TELEPHONE OR POWER POLE WITH GUY ANCHOR
- FIRE HYDRANT
- Y — YARD HYDRANT
- STREET LIGHT POLE
- TRAFFIC SIGNAL
- TRAFFIC SIGN
- S — STOPSIGN
- HEDGE, BRUSH, SHRUBS, WOODS
- 10" — DECIDUOUS TREE AND TRUNK DIAMETER
- 4" — CONIFEROUS TREE AND TRUNK DIAMETER
- SWAMP

- BUILDINGS, STRUCTURES
- STRUCTURES UNDERGROUND
- FUTURE BUILDINGS, STRUCTURES
- CLOTHES LINE
- SWING SET
- FENCE
- FENCE, WOOD
- RAILROAD, EACH TRACK
- CENTERLINE
- 1 / AC45 — SECTION NUMBER OR DETAIL LETTER; DRAWING NUMBER ON WHICH SECTION OR DETAIL APPEARS; OR WHERE SECTION IS CUT OR DETAIL IS NOTED
- DOOR, WINDOW AND LOUVER SCHEDULE REFERENCE
- 1 / A045 — WALL ELEVATION
- ABBREVIATION
- D / 4 — SCHEDULE NUMBER
- F102 — ROOM NUMBER; AREA DESIGNATION
- PV / 10 — EQUIPMENT OR VALVE IDENTIFICATION CODE; EQUIPMENT NUMBER
- PV-10 — EQUIPMENT OR VALVE IDENTIFICATION CODE; EQUIPMENT NUMBER
- EQUIP CALLOUT — EQUIPMENT REPRESENTATION WITH CALLOUT
- EXISTING FACILITY TO BE DEMOLISHED OR REMOVED

MATERIALS LEGEND

- EARTH OR GRADE
- GRANULAR FILL (CRUSHED ROCK OR GRAVEL)
- ROCK
- NEW CONCRETE
- EXISTING CONCRETE, PRECAST OR PRESTRESSED CONCRETE
- BRICK, FACE
- BRICK, COMMON
- CONCRETE MASONRY UNITS (CMU)
- CUT STONE OR SAND FILL, GROUT, MORTAR, AND PLASTER
- WOOD, SHEATHING, PANELING, DECKING, ETC.
- WOOD, STUDS, BEAMS, JOISTS, ETC.
- RIPRAP
- CHECKERED PLATE
- STEEL (FOR 1"SCALE & LARGER)
- STEEL OR ALUMINUM (FOR 3/4" SCALE & SMALLER)
- BAR GRATING (LINES IN DIRECTION OF SPAN)
- ALUMINUM
- INSULATION (BATT)
- INSULATION (RIGID)

PIPING SYSTEMS

NEW PIPING	CDWR	CONDENSER WATER RETURN	HWR	HEATING SYSTEM WATER RETURN	NPW	WATER, NON-POTABLE
UNDERGROUND PIPING	CDWS	CONDENSER WATER SUPPLY	HWS	HEATING SYSTEM WATER SUPPLY	NPHW	WATER, NON-POTABLE HOT
EXISTING PIPING	Co2(G)	CARBON DIOXIDE GAS	HW	WATER, POTABLE HOT	OX	OXYGEN
FUTURE PIPING	Co2(S)	CARBON DIOXIDE SOLUTION	HWC	HOT WATER CIRCULATING	OZ	OZONE
AIR (COMPRESSED)	CW	WATER, COLD	IA	INSTRUMENT AIR	OF	OVERFLOW
ALUMINUM SULFATE - (ALUM)	DW	DISTILLED WATER	PERM	POTASSIUM PERMANGANATE	POLY	POLYMER SOLUTION
ARGON	FeCl	FERRIC CHLORIDE	LIME	LIME	RF	REFRIGERANT
CHEMICAL RESISTANT ACID WASTE	FeS	FERRIC SULFATE	PG	LP GAS (PROPANE)	ST	STORM DRAIN
CHEMICAL RESISTANT ACID WASTE VENT	F	FIRE PROTECTION WATER SYSTEM	N	NITROGEN	SG	SLUDGE GAS
TEMPERED OR BLENDED WATER	FL	FLUORIDE	SA	SODA ASH	SI	SILICA
CARBON SLURRY	FOR	FUEL OIL RETURN	NaOH	SODIUM HYDROXIDE	PD	SUMP PUMP DISCHARGE
ACETYLENE	FOS	FUEL OIL SUPPLY	SP	SODIUM HEXAMETAPHOSPHATE (PHOSPHATE)	SAN	SANITARY SEWER
CHILLED WATER RETURN	FOV	FUEL OIL VENT	NaOCL	SODIUM HYPOCHLORITE	V	VENT
CHILLED WATER SUPPLY	G	GAS, NATURAL	AMM(G)	AMMONIA GAS	VAC	VACUUM
CHLORINE GAS	H	HYDROGEN	AMM(S)	AMMONIA SOLUTION	W	WATER
CHLORINE LIQUID	HE	HELIUM	NO	NITROUS OXIDE		
CHLORINE SOLUTION	HP	HYDROGEN PEROXIDE				
	PA	PHOSPHORIC ACID				

PIPING ACCESSORIES LEGEND

- BLIND FLANGE
- CAP OR PLUG
- CO — CLEANOUT
- CROSS
- DIAPHRAGM SEAL
- ELBOW
- ELBOW DOWN
- ELBOW TURNING UP
- SIZE — HOSE CONNECTION
- Q — QUICK COUPLING
- REDUCER
- RUPTURE DISK
- TEE
- TEE LINE DOWN
- TEE LINE UP
- WYE
- S — WYE STRAINER
- S — WYE STRAINER WITH BLOWOFF
- DRAIN OR BELL-UP
- CALIBRATING COLUMN
- TRAP
- UNION
- WALL SLEEVE
- AT — AUTOMATIC DRAIN TRAP
- DT — DRIP TRAP
- S / S — DUPLEX STRAINER
- EXPANSION COMPENSATOR
- F — INLINE FILTER
- FLEXIBLE HOSE OR TUBING
- FLEXIBLE CONNECTOR
- HOSE REEL
- INJECTOR, EDUCTOR, BLENDER
- ORIFICE PLATE
- PIPE GUIDE
- S — SEDIMENT TRAP
- S — STRAINER
- SUCTION DIFFUSER
- PIPE DIFFUSER
- SURGE CHAMBER
- VENT - SCREENED
- VENT
- P — PRESSURE GAUGE W/SNUBBER
- T — TEMPERATURE INDICATOR
- THERMOMETER
- ELECTROMAGNETIC/ULTRASONIC FLOWMETER
- PITOT TUBE
- ROTAMETER
- TURBINE OR PROPELLOR FLOWMETER
- M — SET STOP METER
- VENTURI
- FM — FLOW METER

MISCELLANEOUS EQUIPMENT

- STATIC MIXER
- VERTICAL MIXER
- SIGHT GLASS
- CENTRIFUGE
- CHANNEL DIFFUSER
- COMPRESSOR OR BLOWER
- PIPE ANCHOR
- PUMP
- SLUICE GATE
- SLIDE GATE
- STOP PLATE
- BAR SCREEN
- EXPANSION TANK
- SCREW (LIFT) PUMP
- FLUME
- WEIR

VALVE LEGEND

- PINCH VALVE
- PLUG VALVE, ECCENTRIC
- PLUG VALVE, NON-ECCENTRIC
- BUTTERFLY VALVE
- GATE VALVE
- BALL VALVE
- GLOBE VALVE
- CHECK VALVE
- 3 WAY VALVE
- 4 WAY VALVE
- ANGLE VALVE
- CHLORINE INSTITUTE VALVE
- DIAPHRAGM VALVE
- THROTTLING VALVE
- FLAME ARRESTER OR CHECK
- BACKWATER VALVE
- INLINE PRESSURE RELIEF VALVE
- PRESSURE REGULATING VALVE
- PRESSURE SUSTAINING OR MAINTAINING VALVE
- VACUUM BREAKER
- THERMAL SHUTOFF VALVE
- EXPLOSION RELIEF VALVE
- HOSE FAUCET
- HOSE FAUCET W/VACUUM BREAKER
- HOSE VALVE W/HOSE NIPPLE
- BACKFLOW PREVENTER
- SAFETY RELIEF VALVE
- V — VACUUM RELIEF CHECK VALVE
- PRESSURE VACUUM RELIEF VALVE

ACTUATOR LEGEND

- E — ELECTRIC
- FLOAT
- DIAPHRAGM
- P/O — AIR/OIL TANDEM
- S — SOLENOID
- A — AIR

NOTE :
SYMBOLS ON THIS SHEET WHICH ARE TO BE SHOWN AS EXISTING SHALL BE DELINEATED AS SCREENED
THOSE SYMBOLS WHICH ARE TO BE SHOWN AS NEW SHALL BE DELINEATED AS SOLID (HEAVY)

PRELIMINARY - NOT FOR CONSTRUCTION

DATE	REVISIONS AND RECORD OF ISSUE	NO.	BY	CK	APP
02/20/15	GWP DRAWINGS	A			

50.3010 - General and Demo Drawings
G-00-006.dwg
SAVED: VAW16843, 12/20/2014 7:13:02 AM
PLOTTED:
USER: KOE49353
XREF1: BORDER.dwg
XREF2:
XREF3:
XREF4:
DWG VER: GWP Pricing

BLACK & VEATCH
Building a world of difference.
Black & Veatch Corporation
Virginia Beach, VA

BEDFORD REGIONAL WATER AUTHORITY
SMITH MOUNTAIN LAKE WTP &
RAW WATER PUMPING STATION / INTAKE

GENERAL LEGEND

DESIGNED:
DETAILED:
CHECKED:
APPROVED:
DATE:

0 1/2 1
IF THIS BAR DOES NOT MEASURE 1" THEN DRAWING IS NOT TO FULL SCALE

PROJECT NO. 182262

G-00-006
SHEET
OF

FD7000_PW
D7000

CODE INFORMATION

APPLICABLE CODES AND STANDARDS

2009 VIRGINIA UNIFORM STATEWIDE BUILDING CODE (VUSBC)
2010 ADA STANDARDS FOR ACCESSIBLE DESIGN, SEPTEMBER 15, 2010

USE GROUP AND OCCUPANCY CLASSIFICATION (SECTION 302)

B BUSINESS
F-2 UTILITY

CONSTRUCTION CLASSIFICATION (SECTION 602): IIB

SECTION 903: AN AUTOMATIC SPRINKLER SYSTEM IS NOT REQUIRED PER SECTION 903.

SECTION 906: PORTABLE FIRE EXTINGUISHERS ARE REQUIRED AS INDICATED.

SECTION 907 - FIRE ALARM AND DETECTION SYSTEM:
NO AUTOMATIC FIRE ALARM SYSTEM IS TO BE INSTALLED, PER 907.2.2 (GROUP B) AND 907.2.4 (GROUP F)

TABLE 503 - ALLOWABLE BUILDING HEIGHTS AND AREAS (IIB CONST.)

BUILDING AREA	NEW CONSTRUCTION	ALLOWABLE
# OF STORIES	1 STORY/25 FT	3 STORIES/55 FT
PROCESS AREA (F-2, FACTORY)	~~11,407~~ 11,650 SF	69,000 SF
ADMIN AREA (B, BUSINESS)	8,000 SF	69,000 SF
TOTAL NET FLOOR AREA	~~20,407~~ 19,650 SF	

SECTION 508 - BUILDING AREA MODIFICATIONS
NO AREA MODIFICATION NEEDED
NO HEIGHT MODIFICATION NEEDED

508.3: THE OCCUPANCIES ARE NON-SEPARATED

TABLE 1016.1: EXIT ACCESS TRAVEL DISTANCE B 200 FT
F-2 300 FT
MAXIMUM CALCULATED TRAVEL DISTANCE 125 FT

TABLE 1018.1: CORRIDOR FIRE-RESISTANCE RATING B,F-2 1 HOUR IF OCCUPANT LOAD GREATER THAN 300

TABLE 1004.1.1: MAXIMUM FLOOR AREA ALLOWANCES PER OCCUPANT
BUSINESS 100 GSF
ACCESSORY STORAGE, MECHANICAL 300 GSF

1004.1.1 MAXIMUM FLOOR AREA ALLOWANCES PER OCCUPANT:
ADMIN (B) OCCUPANCY (100 GROSS) 80
PROCESS (F-2) OCCUPANCY (FAB/MANUF AREA) 49
TOTAL CALCULATED BUILDING OCCUPANCY 129

IPC - TABLE 403.1 MINIMUM NUMBER OF REQUIRED PLUMBING FIXTURES:

		WATER CLOSETS	LAVATORIES	DRINK FOUNTAINS	SERVICE SINK
B	BUSINESS	1 PER 25 FIRST 50 1 PER 50 AFTER	1 PER 40 FIRST 80 1 PER 80 AFTER	1 PER 100	1 SERVICE SINK
F-2	FACTORY	1 PER 100	1 PER 100	1 PER 400	1 SERVICE SINK

TABLE 601: FIRE RESISTANCE RATING FOR BUILDING ELEMENTS

BUILDING ELEMENT		WALLS & STRUCTURE	OPENINGS
PRIMARY STRUCTURAL FRAME		0 HR (TABLE 601)	NR
BEARING WALLS	EXTERIOR	0 HR (TABLE 601)	NR
	INTERIOR	0 HR (TABLE 601)	NR
NONBEARING WALLS	EXTERIOR	0 HR (TABLE 602)	NR
	INTERIOR	0 HR (TABLE 601)	NR
FLOOR CONSTRUCTION		0 HR (TABLE 601)	NR
ROOF CONSTRUCTION		0 HR (TABLE 601)	NR

NOTE: NR = NO REQUIREMENT

TABLE 307.1 (1): MAXIMUM QUANTITY PER CONTROL AREA

MATERIAL	DESCRIPTION	CLASS	STORAGE LIQUID GALLONS
UNSTABLE (REACTIVE)	SODIUM HYPOCHLORITE (12%)	1	NL
UNSTABLE (REACTIVE)	SODIUM BISULFITE (38%)	1	NL
UNSTABLE (REACTIVE)	HYDROGEN CHLORIDE (33%)	1	NL
UNSTABLE (REACTIVE)	SODIUM HYDROXIDE	1	NL
LIQUID	CITRIC ACID (50%)	0	NL

NOTE: NL = NO LIMIT

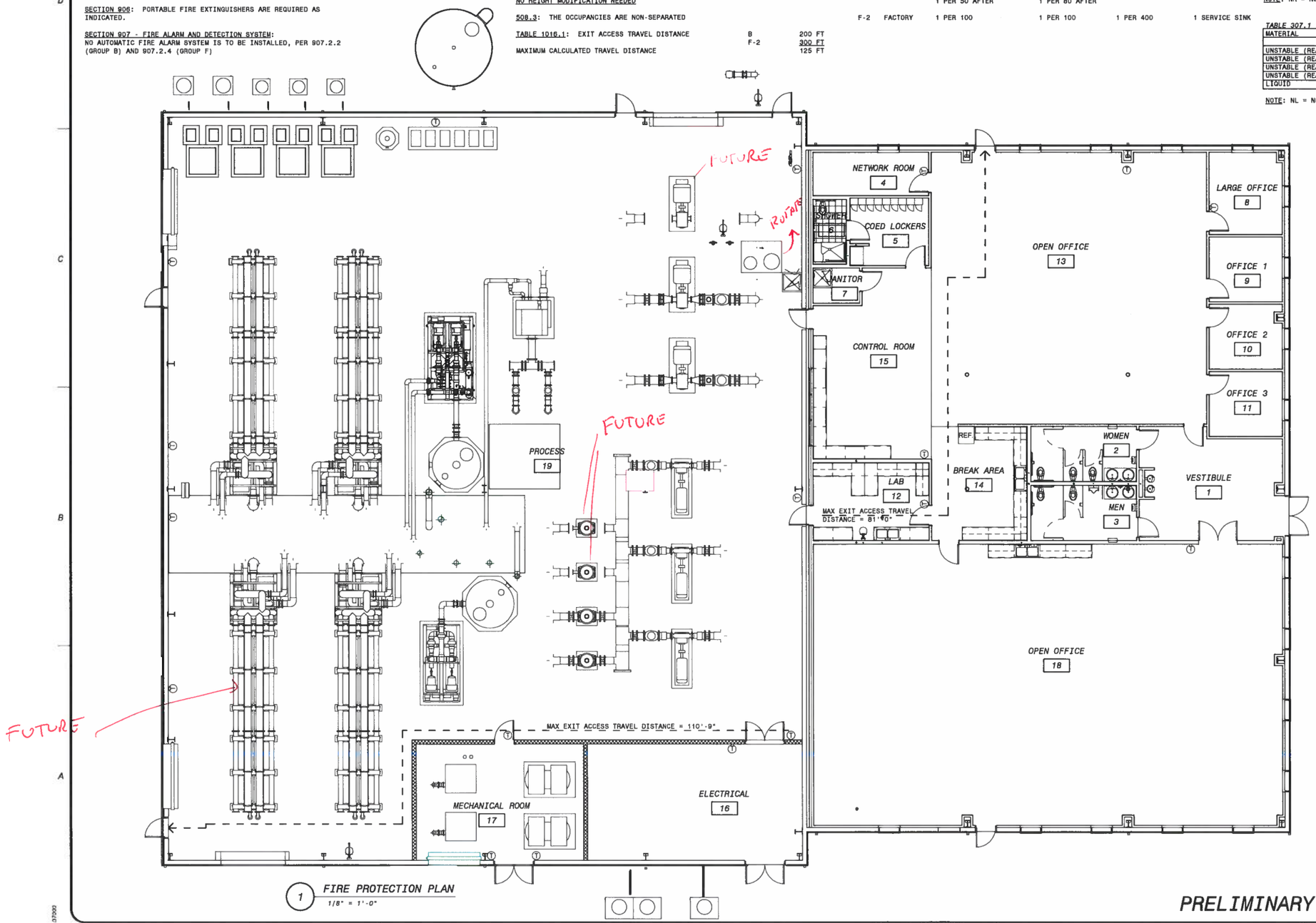

1 FIRE PROTECTION PLAN
1/8" = 1'-0"

PRELIMINARY - NOT FOR CONSTRUCTION

THE LANE GROUP
124 DEPOT AVENUE
CHILHOWIE, VA 24319
P: 276.646.2020 F: 276.646.2380

DATE	REVISIONS AND RECORD OF ISSUE	NO.	BY	CHK	APP

PW: C:\Users\hellison\Documents\Bedford WTP_hellison.rvt
SW: SAVED: 2/27/2015 4:47:57 PM
PLOTTED:
USER:
XREF1:
XREF2:
XREF3:
XREF4:
DWG VER:

BLACK & VEATCH
Building a world of difference.
Black & Veatch Corporation
Kansas City, Missouri

BEDFORD REGIONAL WATER AUTHORITY
SMITH MOUNTAIN LAKE WTP & LAKES TO FOREST WATER LINE EXTENSION

ARCHITECTURAL
MEMBRANE/ADMIN BUILDING
CODE INFORMATION

DESIGNED: DCC
DETAILED: AHW
CHECKED: DCC
APPROVED: Approver
DATE: Issue Date

0 1/2 1
IF THIS BAR DOES NOT MEASURE 1" THEN DRAWING IS NOT TO FULL SCALE

CHA PROJECT NO.
000000

G-00-006

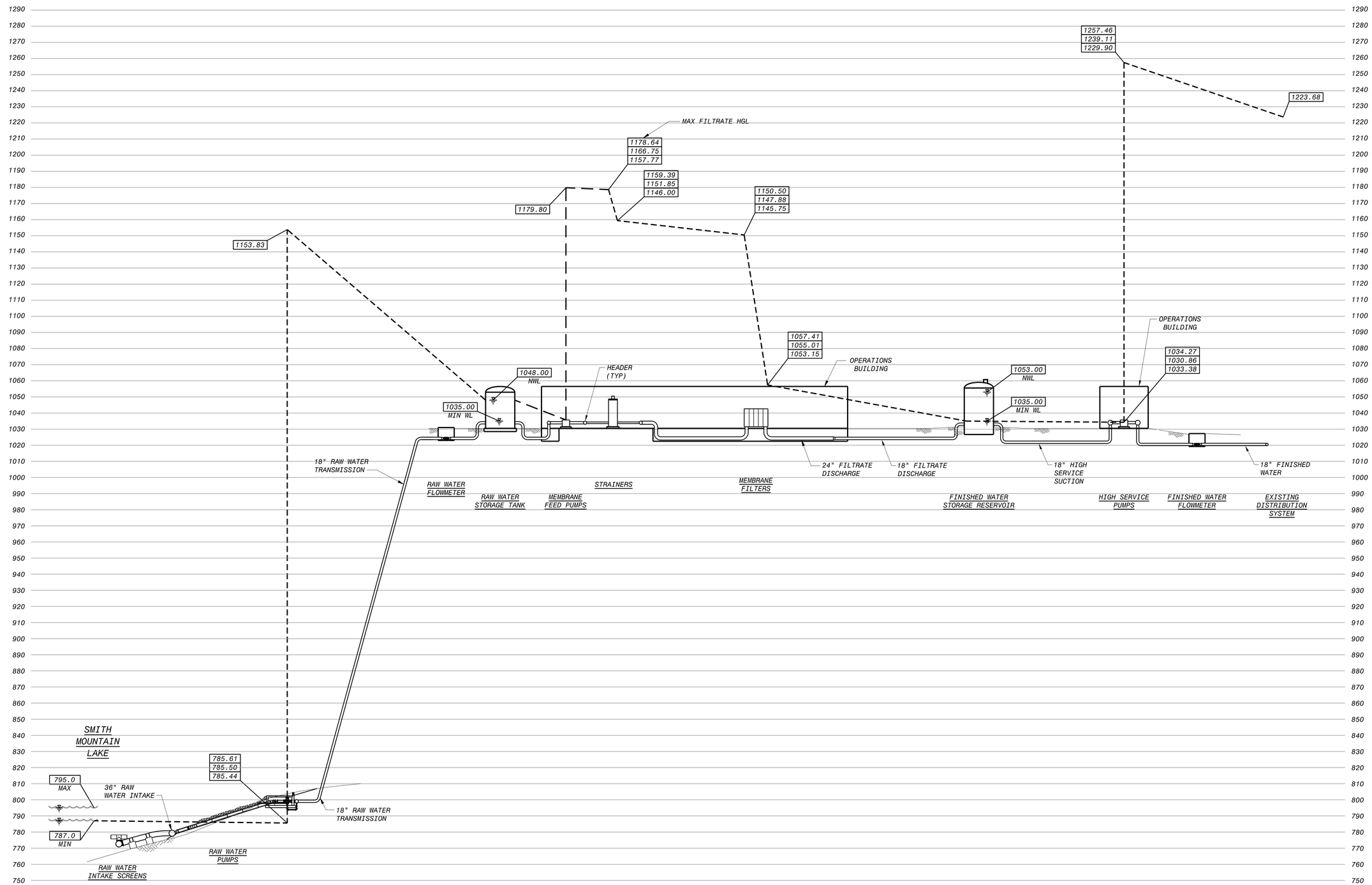

LEGEND

6.0 MGD FILTRATE
4.0 MGD FILTRATE
2.5 MGD FILTRATE

- - - - - MAX. FILTRATE HGL

INTAKE AND TREATMENT PROCESS HYDRAULIC PROFILE

VERT.: 1"=30'
HORIZ.: NOT TO SCALE

NOTE:

1. HYDRAULIC GRADIENTS SHOWN IN TERMS OF MGD FILTRATE. FLOWS VARY THROUGH PROCESS.

30' 20' 10' 0 30' 60'
1"=30'

PRELIMINARY - NOT FOR CONSTRUCTION

DATE	REVISIONS AND RECORD OF ISSUE	NO.	BY	CK	APP
02/20/15	GMP DRAWINGS	A			

50.3010 - General and Demo Drawings
G-00-008.dwg
XREF1:BORDER.dwg
XREF2:
XREF3:
XREF4:
SAVED: KOE49353, 2/25/2015 7:08:15 AM
PLOTTED:
USER: KOE49353
DWG VER: 1000

BLACK & VEATCH
Building a world of difference.

Black & Veatch Corporation
Virginia Beach, VA

BEDFORD REGIONAL WATER AUTHORITY
SMITH MOUNTAIN LAKE WTP &
RAW WATER PUMPING STATION / INTAKE

GENERAL
HYDRAULIC PROFILE
MAIN PROCESS

DESIGNED:
DETAILED:
CHECKED:
APPROVED:
DATE:

0 1/2 1
IF THIS BAR DOES NOT MEASURE 1" THEN DRAWING IS NOT TO FULL SCALE

PROJECT NO.
182262

G-00-008
SHEET
OF

FD7000_PW
D7000

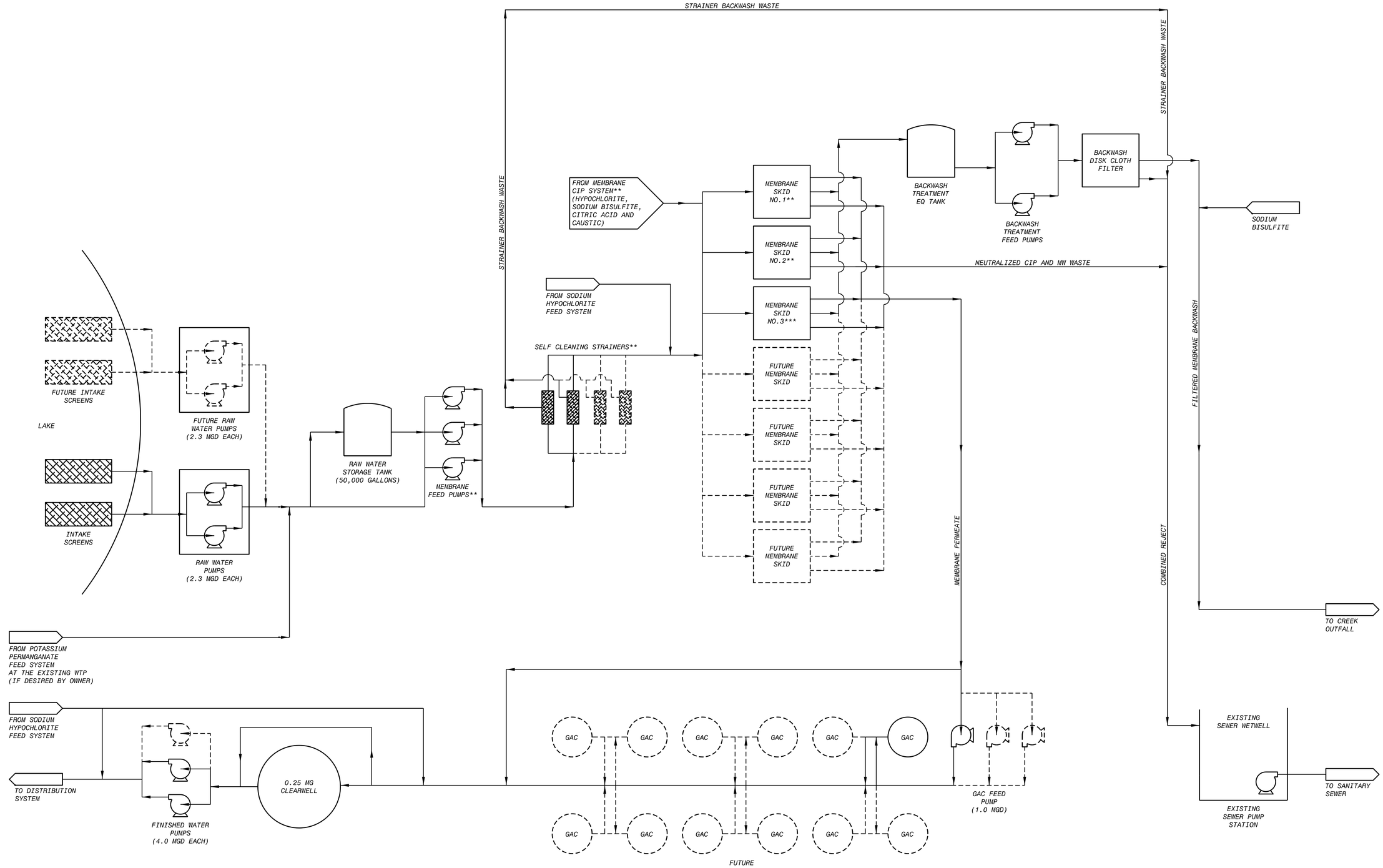

LEGEND	
**	PROVIDED BY MSS
MSS	MEMBRANE SYSTEM SUPPLIER
- - -	FUTURE

PRELIMINARY - NOT FOR CONSTRUCTION

NO.	BY	CK	APP
A			

DATE	REVISIONS AND RECORD OF ISSUE
02/20/15	GMP DRAWINGS

50.3010 - General and Demo Drawings
G-00-010.dwg
XREF1:BORDER.dwg
SAVED: KDE49353, 2/25/2015 6:35:56 AM
XREF2:
PLOTTED:
XREF3:
USER: KDE49353
DWG VER: 1003
XREF4:

BLACK & VEATCH
Building a world of difference.
Black & Veatch Corporation
Virginia Beach, VA

BEDFORD REGIONAL WATER AUTHORITY
SMITH MOUNTAIN LAKE WTP &
RAW WATER PUMPING STATION / INTAKE

GENERAL
PROCESS FLOW DIAGRAM

DESIGNED:
DETAILED:
CHECKED:
APPROVED:
DATE:

0 1/2 1
IF THIS BAR DOES NOT MEASURE 1" THEN DRAWING IS NOT TO FULL SCALE

PROJECT NO.
182262

G-00-010
SHEET
OF

FD7000_PW
D7000

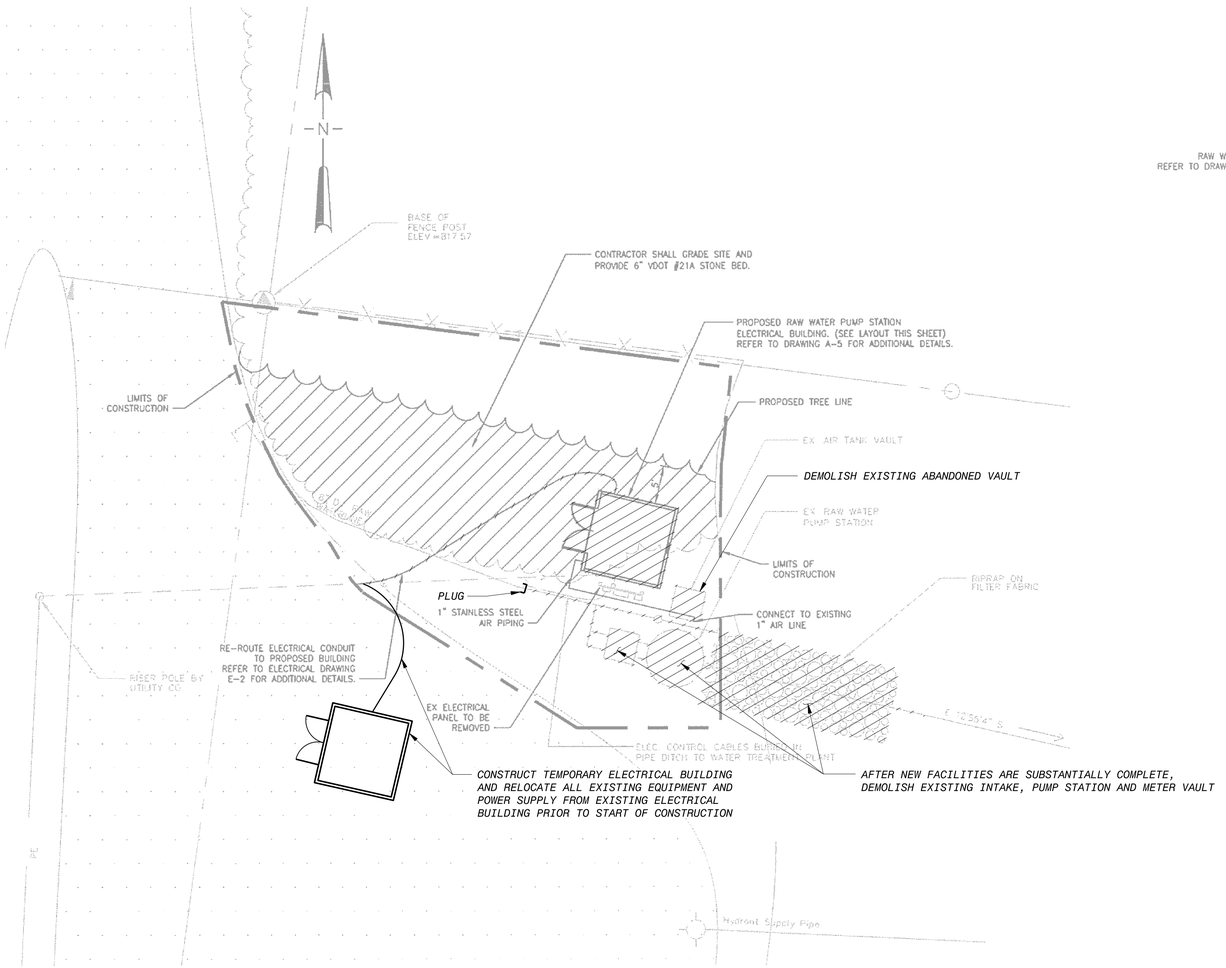

RAW WATER ELECTRICAL BUILDING SITE PLAN

SCALE: 1"=10'-0"

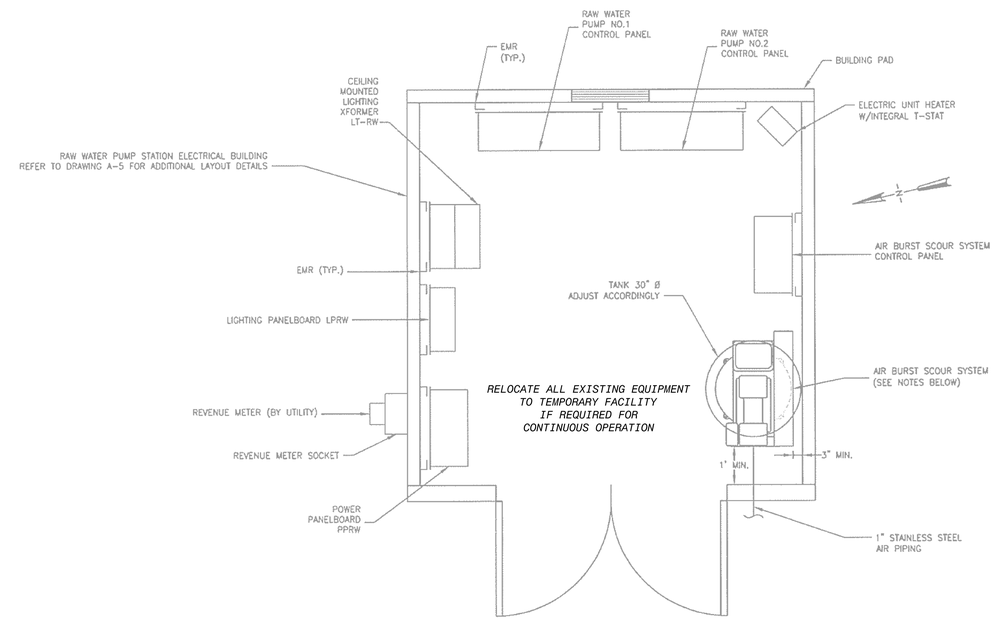

RAW WATER ELECTRICAL BUILDING LAYOUT

SCALE: 1/2"=1'-0"

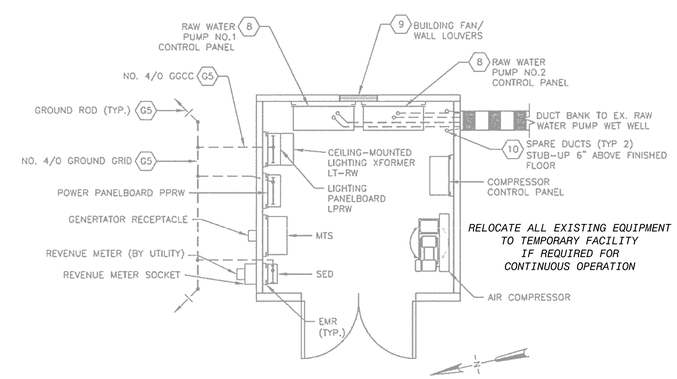

RAW WATER PUMP STATION POWER & CONTROL PLAN

SCALE: 1/4" = 1'-0"

NOTES

1. AFTER NEW FACILITIES ARE SUBSTANTIALLY COMPLETE, DEMOLISH EXISTING PUMP STATION, INTAKE AND METER VAULT.
2. EXISTING FACILITIES MUST REMAIN IN SERVICE THROUGH CONSTRUCTION.
3. TEMPORARY SHUTDOWNS WILL BE LIMITED TO 8 HOURS OR LESS IN DURATION. 7 DAYS ADVANCE NOTICE REQUIRED AND ONLY ONE SHUTDOWN PER WEEK WILL BE ALLOWED.
4. THE OWNER RESERVES THE RIGHT TO KEEP ANY OF THE REMOVED EQUIPMENT.
5. AFTER DEMOLITION, CONTRACTOR TO RETURN SURROUNDING GRADE TO SIMILAR CONDITION AS SURROUNDING AREA.

PRELIMINARY - NOT FOR CONSTRUCTION

NO.	BY	CK	APP
A			

DATE	REVISIONS AND RECORD OF ISSUE
02/20/15	GMP DRAWINGS

50.3010 - General and Demo Drawings

D-20-001.dwg

XREF1:
XREF2:
XREF3:
XREF4:

SAVED: VAH16843, 2/12/2015 1:22:38 PM
PLOTTED:
USER: ADE49353
DWG VER: 1001

BLACK & VEATCH
Building a world of difference.

Black & Veatch Corporation
Virginia Beach, VA

BEDFORD REGIONAL WATER AUTHORITY
SMITH MOUNTAIN LAKE WTP &
RAW WATER PUMPING STATION / INTAKE

DEMOLITION
RAW WATER PUMP STATION ELECTRICAL BUILDING
SITE PLAN AND DETAILS

DESIGNED: ADE
DETAILED: VVV
CHECKED:
APPROVED:
DATE: DECEMBER 2014

0 1/2 1
IF THIS BAR DOES NOT MEASURE 1" THEN DRAWING IS NOT TO FULL SCALE

PROJECT NO.
182262

D-20-001
SHEET
OF

FD7000
D7000

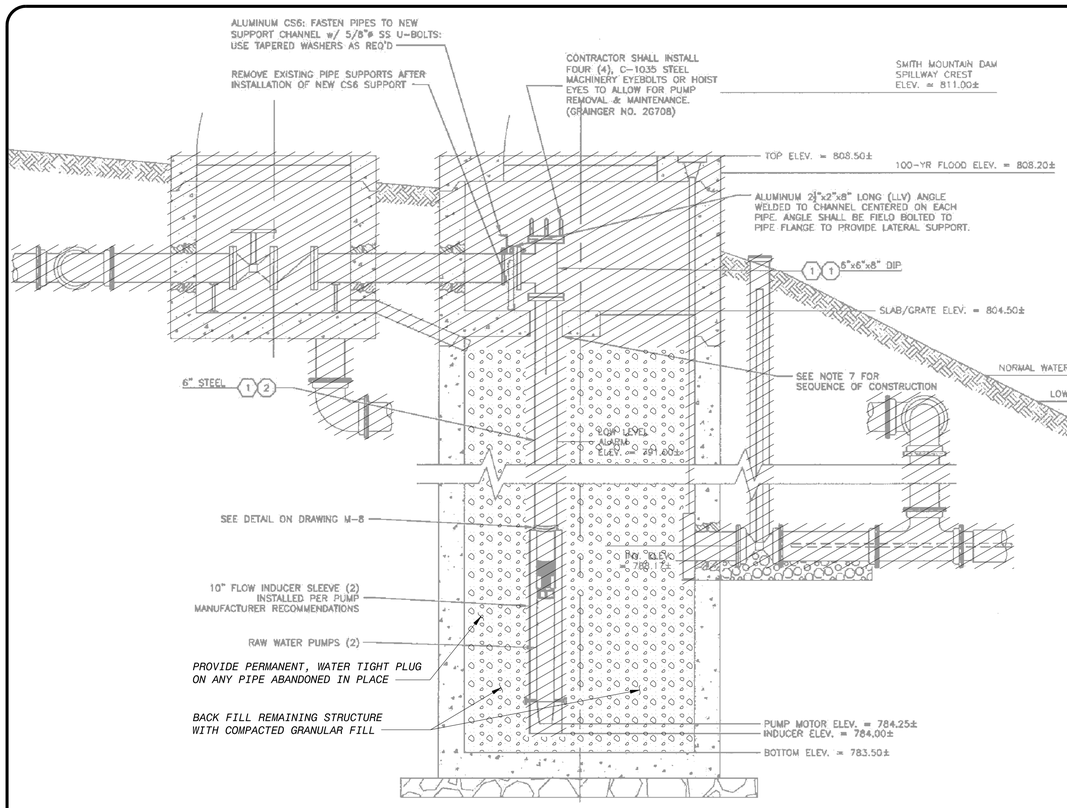

PUMP STATION CROSS-SECTION 1 M-1

SCALE: 1/2"=1'

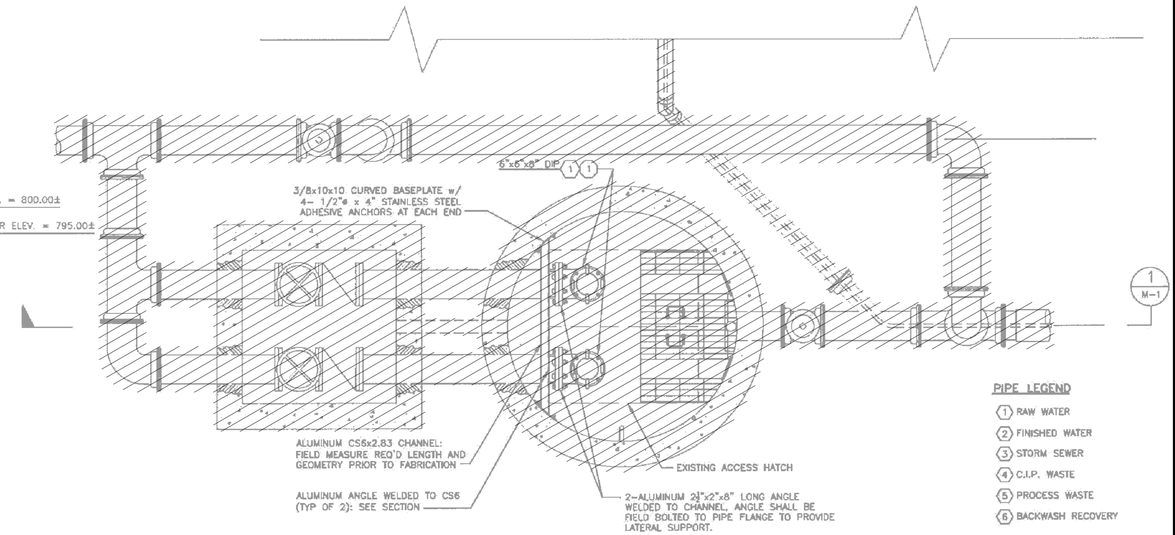

PLAN VIEW

SCALE: 1/2"=1'

PIPE LEGEND

1. RAW WATER
2. FINISHED WATER
3. STORM SEWER
4. C.I.P. WASTE
5. PROCESS WASTE
6. BACKWASH RECOVERY

VALVE/FITTING LEGEND

1. TEE W/ BLIND FLANGE
2. PIPE W/ WELDED FLANGE END AND THREADED END (SEE CONNECTION DETAIL)

NOTES

1. AFTER NEW FACILITIES ARE SUBSTANTIALLY COMPLETE, DEMOLISH EXISTING PUMP STATION, INTAKE AND METER VAULT.
2. EXISTING FACILITIES MUST REMAIN IN SERVICE THROUGH CONSTRUCTION.
3. TEMPORARY SHUTDOWNS WILL BE LIMITED TO 8 HOURS OR LESS IN DURATION. 7 DAYS ADVANCE NOTICE REQUIRED AND ONLY ONE SHUTDOWN PER WEEK WILL BE ALLOWED.
4. THE OWNER RESERVES THE RIGHT TO KEEP ANY OF THE REMOVED EQUIPMENT.
5. AFTER DEMOLITION, CONTRACTOR TO RETURN SURROUNDING GRADE TO SIMILAR CONDITION AS SURROUNDING AREA.

PRELIMINARY - NOT FOR CONSTRUCTION

NO.	BY	CK	APP
A			

DATE	REVISIONS AND RECORD OF ISSUE
02/20/15	GMP DRAWINGS

50-3010 - General and Demo Drawings
D-20-002.dwg

XREF1:
XREF2:
XREF3:
XREF4:

SAVED: VAN16843, 2/12/2015 1:24:25 PM
PLOTTED:
USER: ADE49353 DWG VER: 1001

BLACK & VEATCH
Building a world of difference.

Black & Veatch Corporation
Virginia Beach, VA

BEDFORD REGIONAL WATER AUTHORITY
SMITH MOUNTAIN LAKE WTP &
RAW WATER PUMPING STATION / INTAKE

DEMOLITION
RAW WATER PUMP STATION
PLAN AND SECTION

DESIGNED: ADE
DETAILED: VVV
CHECKED:
APPROVED:
DATE: DECEMBER 2014

0 1/2 1
IF THIS BAR DOES NOT MEASURE 1" THEN DRAWING IS NOT TO FULL SCALE

PROJECT NO.
182262

D-20-002
SHEET
OF

FD7000
D7000

EROSION AND SEDIMENT CONTROL NARRATIVE

PROJECT DESCRIPTION

THE SMITH MOUNTAIN LAKE WTP AND INTAKE/RAW WATER PUMP STATION WILL PROVIDE FACILITIES TO DELIVER AN INITIAL FINISHED WATER FLOW OF FOUR (4) MILLION GALLONS PER DAY (MGD) FOR THE BEDFORD REGIONAL WATER AUTHORITY (BRWA) THROUGHOUT BEDFORD COUNTY, WITH PROVISIONS INCLUDED TO ALLOW FOR FUTURE PLANT EXPANSION. THE PROJECT WILL ENTAIL A NEW INTAKE, RAW WATER PUMP STATION AND A NEW WATER TREATMENT BUILDING WHERE NEARLY ALL TREATMENT FACILITIES WILL BE LOCATED INDOORS, INCLUDING ALL CHEMICAL FEED AND STORAGE. IN ADDITION TO THE NEW WATER TREATMENT BUILDING, THERE WILL BE A GRANULAR ACTIVATED CARBON CONTACTOR AND RAW AND FINISHED WATER STORAGE TANKS ALSO LOCATED OUTDOORS. FINALLY, ADDITIONAL SITE WORK WILL INCLUDE PAVED AND GRAVEL ROADS AND PARKING LOTS AS WELL AS FACILITY FENCING.

EXISTING SITE CONDITIONS:

EXISTING CONDITIONS ARE SHOWN ON THE ATTACHED PLAN SHEETS.

ADJACENT PROPERTY:

OWNERSHIP, TAX MAP NUMBER, RELEVANT AND AVAILABLE EASEMENT REFERENCES, STREAMS AND ROADS ARE SHOWN ON THE PLAN SHEETS FOR EACH ADJACENT AND/OR AFFECTED PROPERTY.

SOILS:

THE FOLLOWING SOILS INFORMATION IS IN THE PROJECT SOILS REPORT.

CRITICAL EROSION AREAS:

EARLY ESTABLISHMENT AND PROPER MAINTENANCE OF PERIMETER CONTROLS WILL PROVIDE SEDIMENTATION CONTROL. STABILIZE AND MAINTAIN DITCHES AND FILL SLOPES THROUGHOUT PROJECT CONSTRUCTION TO CONTROL EROSION.

STRUCTURAL PRACTICES

SILT FENCE - 3.05: SILT FENCE SEDIMENT BARRIERS SHALL BE INSTALLED DOWNSLOPE OF AREAS WITH MINIMAL GRADES TO FILTER SEDIMENT-LADEN RUNOFF FROM SHEET FLOW AS INDICATED.

VEGETATIVE PRACTICES

TEMPORARY SEEDING - 3.31: ALL DENUDED AREAS WHICH WILL BE LEFT DORMANT FOR MORE THAN 30 DAYS SHALL BE SEEDED WITH FAST GERMINATING TEMPORARY VEGETATION IMMEDIATELY FOLLOWING GRADING OF THOSE AREAS. SELECTION OF THE SEED MIXTURE SHALL DEPEND ON THE TIME OF YEAR IT IS APPLIED.
PERMANENT SEEDING-3.32: ESTABLISHMENT OF PERMANENT VEGETATIVE COVER BY PLACING SEED ON ROUGH GRADED AREAS THAT WILL NOT BE BROUGHT TO FINAL GRADE FOR A YEAR OR MORE.
MULCHING - 3.35: APPLICATION OF PLANT RESIDUES OR OTHER SUITABLE MATERIALS TO DISTURBED SURFACES TO PREVENT EROSION AND REDUCE OVERLAND FLOW VELOCITIES.

PERMANENT STABILIZATION

ALL NON-PAVED AREAS DISTURBED BY CONSTRUCTION SHALL BE STABILIZED WITH PERMANENT SEEDING IMMEDIATELY FOLLOWING FINISH GRADING. SEEDING SHALL BE IN ACCORDANCE WITH STD. & SPEC. 3.32, PERMANENT SEEDING. SEED TYPE SHALL BE AS SPECIFIED FOR "MINIMUM CARE LAWNS" AND "GENERAL SLOPES" IN THE HANDBOOK. MULCH (STRAW OR FIBER) SHALL BE USED ON ALL SEEDED SURFACES. IN ALL SEEDING OPERATIONS SEED, FERTILIZER AND LIME SHALL BE APPLIED PRIOR TO MULCHING.

MANAGEMENT STRATEGIES

1. CONSTRUCTION SHALL BE SEQUENCED SO THAT GRADING OPERATIONS CAN BEGIN AND END AS QUICKLY AS POSSIBLE.
2. ISOLATE EXCAVATION AND DRAINAGE FROM DOWNSTREAM CONVEYANCES IN ORDER TO MINIMIZE PERIMETER CONTROLS.
3. ALL CUT AND FILL SLOPES SHALL BE SEEDED WITHIN SEVEN (7) DAYS OF ACHIEVING FINAL GRADE.
4. ALL EROSION AND SEDIMENT CONTROL PRACTICES SHALL BE MAINTAINED UNTIL THEY ARE NO LONGER REQUIRED TO COMPLY WITH THE CONTRACT DOCUMENTS OR STATE LAW. ONLY AFTER INSPECTION AND APPROVAL FROM WVWA MAY ITEMS BE REMOVED FOLLOWING THE STABILIZATION OF CONTRIBUTING AREAS.

INSPECTIONS

THE GENERAL CONTRACTOR SHALL INSPECT DISTURBED AREAS OF THE SITE THAT HAVE NOT BEEN FINALLY STABILIZED, AND AREAS USED FOR STORAGE OF MATERIALS THAT ARE EXPOSED TO PRECIPITATION, STRUCTURAL CONTROL MEASURES, AND THE AREA OF CONSTRUCTION VEHICLE ACCESS AT LEAST EVERY FOURTEEN (14) CALENDAR DAYS, AND WITHIN FORTY-EIGHT (48) HOURS OF THE END OF A STORM EVENT PRODUCING 1/2" OR GREATER OF PRECIPITATION. WHERE AREAS HAVE BEEN FINALLY OR TEMPORARILY STABILIZED OR RUNOFF IS UNLIKELY DUE TO WINTER CONDITIONS (SITE IS COVERED WITH SNOW, ICE, OR FROZEN GROUND EXISTS) SUCH INSPECTIONS SHALL BE CONDUCTED AT LEAST ONCE EVERY MONTH.

INSPECT DISTURBED AREAS AND AREAS OF MATERIALS STORAGE THAT ARE EXPOSED TO PRECIPITATION FOR EVIDENCE OF, OR THE POTENTIAL FOR SEDIMENT ENTERING THE STORM DRAIN SYSTEM. INSPECT E&S CONTROLS IN ACCORDANCE WITH REQUIREMENTS STATED HEREIN, AND INSPECT POINTS OF STORM DRAIN DISCHARGE FOR EXCESSIVE SEDIMENTATION. CORRECT SITE CONTROLS AS REQUIRED TO REDUCE SEDIMENTATION OF STORM DRAINS, CULVERTS, AND RECEIVING CHANNELS. IF CONTROLS OR SEDIMENT PREVENTION AREAS ARE FOUND TO BE IN NEED OF REPAIR OR MODIFICATION, THE GENERAL CONTRACTOR SHALL PROVIDE ADDITIONAL MEASURES OR MODIFICATIONS TO EXISTING MEASURES AS REQUIRED. ANY ADDITIONAL MEASURES OR MODIFICATIONS TO EXISTING MEASURES SHALL BE RECORDED AS FIELD REVISIONS TO THESE PLANS. IN THE EVENT THAT ADDITIONAL CONTROLS ARE FOUND TO BE REQUIRED, THE GENERAL CONTRACTOR SHALL BE RESPONSIBLE FOR IMPLEMENTING THESE CONTROLS BEFORE THE NEXT ANTICIPATED STORM EVENT. IF IMPLEMENTATION BEFORE THE NEXT STORM EVENT IS IMPRACTICAL, THEY SHALL BE IMPLEMENTED AS SOON AS PRACTICAL.

A REPORT SUMMARIZING THE SCOPE OF INSPECTIONS, NAME OF INSPECTOR, INSPECTOR'S QUALIFICATIONS, DATES OF INSPECTIONS, MAJOR OBSERVATIONS PERTAINING TO THE IMPLEMENTATION OF THESE EROSION CONTROL PLANS, AND ACTIONS TAKEN SHALL BE MADE AND RETAINED AS A PART OF THESE PLANS. MAJOR OBSERVATIONS OF THESE REPORTS SHALL INCLUDE: THE LOCATIONS OF EXCESSIVE SEDIMENTATION FROM THE SITE; LOCATIONS OF CONTROLS IN NEED OF REPAIR; LOCATIONS OF FAILED OR INADEQUATE CONTROLS; AND LOCATIONS WHERE ADDITIONAL CONTROLS ARE NEEDED.

GENERAL EROSION AND SEDIMENT CONTROL NOTES

ES-1: UNLESS OTHERWISE INDICATED, CONSTRUCT AND MAINTAIN ALL VEGETATIVE AND STRUCTURAL EROSION AND SEDIMENT CONTROL PRACTICES ACCORDING TO MINIMUM STANDARDS AND SPECIFICATIONS OF THE VIRGINIA EROSION AND SEDIMENT CONTROL HANDBOOK, AND VIRGINIA REGULATIONS VR 625-02-00 EROSION AND SEDIMENT CONTROL REGULATIONS.

ES-2: INSPECTORS WILL MAKE A CONTINUING REVIEW AND EVALUATION OF THE METHODS AND EFFECTIVENESS OF THE E.S.C. PLAN.

ES-3: PLACE ALL EROSION AND SEDIMENT CONTROL MEASURES PRIOR TO OR AS THE FIRST STEP IN CLEARING, GRADING, OR LAND DISTURBANCE.

ES-4: MAINTAIN A COPY OF THE APPROVED EROSION AND SEDIMENT CONTROL PLAN ON THE SITE AT ALL TIMES.

ES-5: PRIOR TO COMMENCING LAND-DISTURBING ACTIVITIES IN AREAS OTHER THAN INDICATED ON THESE PLANS (INCLUDING, BUT NOT LIMITED TO, OFFSITE BORROW OR WASTE AREA), SUBMIT A SUPPLEMENTARY EROSION CONTROL PLAN TO THE ARCHITECT/ENGINEER FOR REVIEW AND ACCEPTANCE.

ES-6: PROVIDE ADDITIONAL EROSION CONTROL MEASURES NECESSARY TO PREVENT EROSION AND SEDIMENTATION AS DETERMINED BY THE LOCAL AUTHORITY HAVING JURISDICTION.

ES-7: ALL DISTURBED AREAS SHALL DRAIN TO APPROVED SEDIMENT CONTROL MEASURES AT ALL TIMES DURING LAND-DISTURBING ACTIVITIES AND DURING SITE DEVELOPMENT.

ES-8: DURING DEWATERING OPERATIONS, PUMP WATER INTO AN APPROVED FILTERING DEVICE.

ES-9: INSPECT ALL EROSION CONTROL MEASURES DAILY AND AFTER EACH RUNOFF-PRODUCING RAINFALL EVENT. MAKE ANY NECESSARY REPAIRS OR CLEANUP TO MAINTAIN THE EFFECTIVENESS OF THE EROSION CONTROL DEVICES IMMEDIATELY.

MINIMUM STANDARDS

THE FOLLOWING STANDARDS ARE TO BE PROVIDED OR ADDRESSED ON EVERY DEVELOPMENT PROJECT EXCEEDING 10,000 SF IN AREA OF DISTURBANCE. THESE STANDARDS ARE CONSIDERED A MINIMUM AND MAY REQUIRE ADDITIONAL MEASURES AS DEEMED NECESSARY BY THE LOCAL APPROVING AUTHORITY OR THE CONSULTING ENGINEER.

NO.	CRITERIA, TECHNIQUE OR METHOD	PRACTICES PROVIDED
1	PERMANENT OR TEMPORARY SOIL STABILIZATION SHALL BE APPLIED TO DENUDED AREAS WITHIN SEVEN (7) DAYS AFTER FINAL GRADE HAS BEEN REACHED ON ANY PORTION OF THE SITE. TEMPORARY SOIL STABILIZATION SHALL BE APPLIED WITHIN SEVEN (7) DAYS TO DENUDED AREAS THAT MAY BE AT FINAL GRADE BUT WILL REMAIN DORMANT (UNDISTURBED) FOR LONGER THAN THIRTY (30) DAYS. PERMANENT STABILIZATION SHALL BE APPLIED TO AREAS THAT ARE TO BE LEFT DORMANENT FOR MORE THAN 1 YEAR.	TS PS MU FOR ALL DENUDED AREAS
2	DURING CONSTRUCTION OF THE PROJECT, SOIL STOCKPILES SHALL BE STABILIZED OR PROTECTED WITH SEDIMENT TAPPING MEASURES. THE CONTRACTOR IS RESPONSIBLE FOR THE TEMPORARY PROTECTION AND PERMANENT STABILIZATION OF ALL SOIL STOCKPILES ON SITE AS WELL AS SOIL INTENTIONALLY TRANSPORTED FROM THE PROJECT SITE.	TS PS MU FOR PROVIDED STOCKPILE
3	A PERMANENT VEGETATIVE COVER SHALL BE ESTABLISHED ON DENUDED AREAS NOT OTHERWISE PERMANENTLY STABILIZED. PERMANENT VEGETATION SHALL NOT BE CONSIDERED ESTABLISHED UNTIL A GROUND COVER IS ACHIEVED THAT, IN THE OPINION OF THE WVWA, IS UNIFORM, MATURE ENOUGH TO SURVIVE AND WILL INHIBIT EROSION.	TS PS MU FOR ALL DENUDED AREAS
4	SEDIMENT BASINS AND TRAPS, PERIMETER DIKES, SEDIMENT BARRIERS AND OTHER MEASURES INTENDED TO TRAP SEDIMENT SHALL BE CONSTRUCTED AS A FIRST STEP IN ANY LAND-DISTURBING ACTIVITY AND SHALL BE MADE FUNCTIONAL BEFORE UPSLOPE AND DISTURBANCE TAKES PLACE.	ST FOR ALL DRAINAGE DIVIDES
5	STABILIZATION METHODS SHALL BE APPLIED TO EARTHEN STRUCTURES SUCH AS DAMS, DIKES AND DIVERSIONS IMMEDIATELY AFTER INSTALLATION.	TS PS MU FOR ALL EARTHEN STRUCTURES
6	SEDIMENT TRAPS AND BASINS SHALL BE DESIGNED AND CONSTRUCTED BASED UPON THE TOTAL DRAINAGE AREA TO BE SERVED BY THE TRAP OR BASIN.	SEE SUPPLEMENTAL CALCULATIONS
7	CUT AND FILL SLOPES SHALL BE CONSTRUCTED IN A MANNER THAT WILL MINIMIZE EROSION. SLOPES THAT ARE FOUND TO BE ERODING EXCESSIVELY WITHIN ONE YEAR OF PERMANENT STABILIZATION SHALL BE PROVIDED WITH ADDITIONAL SLOPE STABILIZATION MEASURES UNTIL THE PROBLEM IS CORRECTED.	TS PS MU FOR ALL ERODING SLOPES
8	CONCENTRATED RUNOFF SHALL NOT FLOW DOWN CUT OR FILL SLOPES UNLESS CONTAINED WITHIN AN ADEQUATE TEMPORARY OR PERMANENT CHANNEL, FLUME OR SLOPE DRAINAGE STRUCTURE.	SCC
9	WHENEVER WATER SEEPS FROM A SLOPE FACE, ADEQUATE DRAINAGE OR OTHER PROTECTION SHALL BE PROVIDED.	SHOULD STEEPS OCCUR IN ANY EXISTING OR NEW CUT OR FILL SLOPE, THE CONTRACTOR SHALL FIRST INSURE THAT THERE ARE NOT AREAS OF PONDED WATER AT THE SLOPES, AND THEN SHALL CONTACT BOTH THE DESIGN ENGINEER AND THE PROJECT GEOTECHNICAL ENGINEER FOR ON-SITE EVALUATION OF THE AREAS OF SEEPAGE.
10	ALL STORM SEWER INLETS THAT ARE MADE OPERABLE DURING CONSTRUCTION SHALL BE PROTECTED SO THAT SEDIMENT-LADEN WATER CANNOT ENTER THE CONVEYANCE SYSTEM WITHOUT FIRST BEING FILTERED OR OTHERWISE TREATED TO REMOVE SEDIMENT.	IP CIP FOR ALL STORMWATER INTAKES
11	BEFORE NEWLY CONSTRUCTED STORMWATER CONVEYANCE CHANNELS ARE MADE OPERATIONAL, ADEQUATE OUTLET PROTECTION AND ANY REQUIRED TEMPORARY OR PERMANENT CHANNEL LINING SHALL BE INSTALLED IN BOTH THE CONVEYANCE CHANNEL AND RECEIVING CHANNEL.	RR OP FOR ALL STORMWATER OUTLETS
12	WHEN WORK IN A LIVE WATERCOURSE IS PERFORMED, PRECAUTIONS SHALL BE TAKEN TO MINIMIZE ENCROACHMENT, CONTROL SEDIMENT TRANSPORT AND STABILIZE THE WORK AREA TO THE GREATEST EXTENT POSSIBLE DURING CONSTRUCTION. NONERODIBLE MATERIAL SHALL BE USED FOR THE CONSTRUCTION OF CAUSEWAYS AND COFFERDAMS. EARTHEN FILL MAY BE USED FOR THESE STRUCTURES IF ARMORED BY NONERODIBLE COVER MATERIALS.	SF FOR THE PROTECTION OF THE NATURAL WATERCOURSE
13	WHEN A LIVE WATERCOURSE MUST BE CROSSED BY CONSTRUCTION VEHICLES MORE THAN TWICE IN ANY SIX (6) MONTH PERIOD, A TEMPORARY STREAM CROSSING CONSTRUCTED OF NONERODIBLE MATERIAL.	PERMANENT CROSSING
14	ALL APPLICABLE FEDERAL, STATE AND LOCAL REGULATIONS PERTAINING TO WORKING IN OR CROSSING LIVE WATERCOURSES SHALL BE MET. THE BEDS AND BANKS OF ANY WATERCOURSE SHALL BE STABILIZED IMMEDIATELY AFTER WORK IN THE WATERCOURSE IS COMPLETED.	TS PS MU
15	THE BEDS AND BANKS OF A WATERCOURSE SHALL BE STABILIZED IMMEDIATELY AFTER WORK IN THE WATERCOURSE IS COMPLETED.	TS PS MU
16	UNDERGROUND UTILITY LINES SHALL BE INSTALLED IN ACCORDANCE WITH THE FOLLOWING STANDARDS IN ADDITION TO OTHER APPLICABLE CRITERIA: 1) NO MORE THAN 500 LINEAR FEET OF ANY TRENCH MAY BE OPENED AT ONE TIME. 2) EXCAVATED MATERIAL SHALL BE PLACED ON THE UPHILL SIDE OF TRENCHES. 3) EFFLUENT FROM DEWATERING OPERATIONS SHALL BE FILTERED OR PASSED THROUGH AN APPROVED SEDIMENT TRAPPING DEVICEM OR BOTH, AND DISCHARGED IN A MANNER THAT DOES NOT ADVERSELY AFFECT FLOWING STREAMS OR OFF-SITE PROPERTY. 4) MATERIAL USED FOR BACKFILLING TRENCHES SHALL BE PROPERLY COMPACTED IN ORDER TO MINIMIZE EROSION AND PROMOTE STABILIZATION. 5) RESTABILIZATION SHALL BE ACCOMPLISHED IN ACCORDANCE WITH THESE REGULATIONS. 6) APPLICABLE SAFETY REGULATIONS SHALL BE COMPLIED WITH.	NOT APPLICABLE
17	WHERE CONSTRUCTION VEHICLES ACCESS ROUTES INTERSECT PAVED OR PUBLIC ROADS, PROVISIONS SHALL BE MADE TO MINIMIZE THE TRANSPORT OF SEDIMENT BY VEHICULAR TRACKING ONTO THE PAVED SURFACE. WHERE SEDIMENT IS TRANSPORTED ONTO A PAVED OR PUBLIC ROAD SURFACE, THE ROAD SURFACE SHALL BE CLEANED THOROUGHLY AT THE END OF EACH DAY. SEDIMENT SHALL BE REMOVED FROM THE ROADS BY SHOVELING OR SWEEPING AND TRANSPORTED TO A SEDIMENT CONTROL DISPOSAL AREA. STREET WASHING SHALL BE ALLOWED ONLY AFTER SEDIMENT IS REMOVED IN THIS MANNER.	CE FOR ALL POINTS OF INGRESS/EGRESS
18	ALL TEMPORARY EROSION AND SEDIMENT CONTROL MEASURES SHALL BE REMOVED WITHIN THIRTY (30) DAYS AFTER FINAL SITE STABILIZATION OR AFTER THE TEMPORARY MEASURES ARE NO LONGER NEEDED, UNLESS OTHERWISE AUTHORIZED BY THE LOCAL PROGRAM ADMINISTRATOR. TRAPPED SEDIMENT AND THE DISTURBED SOIL AREAS RESULTING FROM THE DISPOSITION OF TEMPORARY MEASURES SHALL BE PERMANENTLY STABILIZED TO PREVENT FURTHER EROSION AND SEDIMENTATION.	TS PS MU
19	PROPERTIES AND WATERWAYS DOWNSTREAM FROM DEVELOPMENT SITES SHALL BE PROTECTED FROM SEDIMENT DISPOSITION, EROSION AND DAMAGE DUE TO INCREASES IN VOLUME, VELOCITY AND PEAK FLOW RATE OF STORMWATER RUNOFF FOR THAT STATED FREQUENCY STORM OF 24-HOUR DURATION IN ACCORDANCE WITH THE APPLICABLE CRITERIA.	SELF-EXPANATORY SEE PLANS AND CALCULATIONS

SILT FENCE DROP INLET PROTECTION

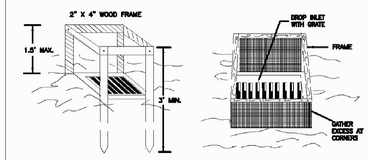

PERSPECTIVE VIEWS

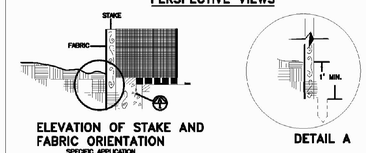

ELEVATION OF STAKE AND FABRIC ORIENTATION

DETAIL A

SPECIFIC APPLICATION

THIS METHOD OF INLET PROTECTION IS APPLICABLE WHERE THE INLET DRAINS A RELATIVELY FLAT AREA (SLOPE NO GREATER THAN 5%) WHERE THE INLET SHEET OR OVERLAND FLOWS (NOT EXCEEDING 1 C.F.S.) ARE TYPICAL. THIS METHOD SHALL NOT APPLY TO INLETS RECEIVING CONCENTRATED FLOWS, SUCH AS IN STREET OR HIGHWAY MEDIANS.

BLOCK AND GRAVEL CURB INLET SEDIMENT FILTER

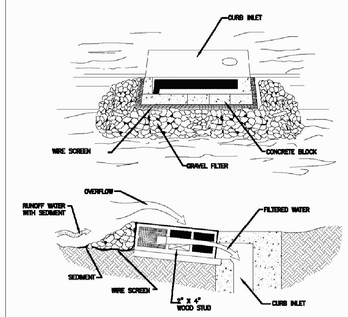

SPECIAL APPLICATION

THIS METHOD OF INLET PROTECTION IS APPLICABLE AT CURB INLETS WHERE AN OVERFLOW CAPABILITY IS NECESSARY TO PREVENT EXCESSIVE PONDING IN FRONT OF THE STRUCTURE.

* GRAVEL SHALL BE VDOT #3, #357 OR #5 COARSE AGGREGATE

TRAPEZOIDAL RIPRAP LINED CHANNEL

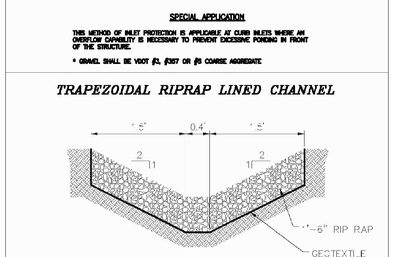

FENCING AND ARMORING

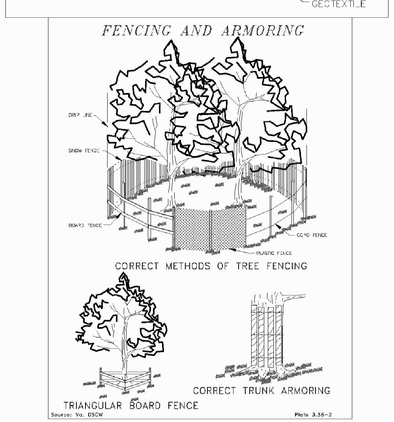

PRELIMINARY - NOT FOR CONSTRUCTION

NO.	REVISIONS AND RECORD OF ISSUE	BY	CK	APP
A	02/20/15 GMP DRAWINGS			

50.3130 - Civil Drawings
C-00-501.dwg
SAVED: VAN16843, 12/29/2014 7:44:55 AM
PLOTTED:
USER: KOE49353
DWG VER: 1000
XREF1:
XREF2:
XREF3:
XREF4:

BLACK & VEATCH
Building a world of difference.
Black & Veatch Corporation
Virginia Beach, VA

BEDFORD REGIONAL WATER AUTHORITY
SMITH MOUNTAIN LAKE WTP & RAW WATER PUMPING STATION / INTAKE

CIVIL
EROSION AND SEDIMENT CONTROL DETAILS

DESIGNED:
DETAILED:
CHECKED:
APPROVED:
DATE:

0 1/2 1
IF THIS BAR DOES NOT MEASURE 1" THEN DRAWING IS NOT TO FULL SCALE

PROJECT NO. 182262

C-00-501
SHEET
OF

F07000
D7000

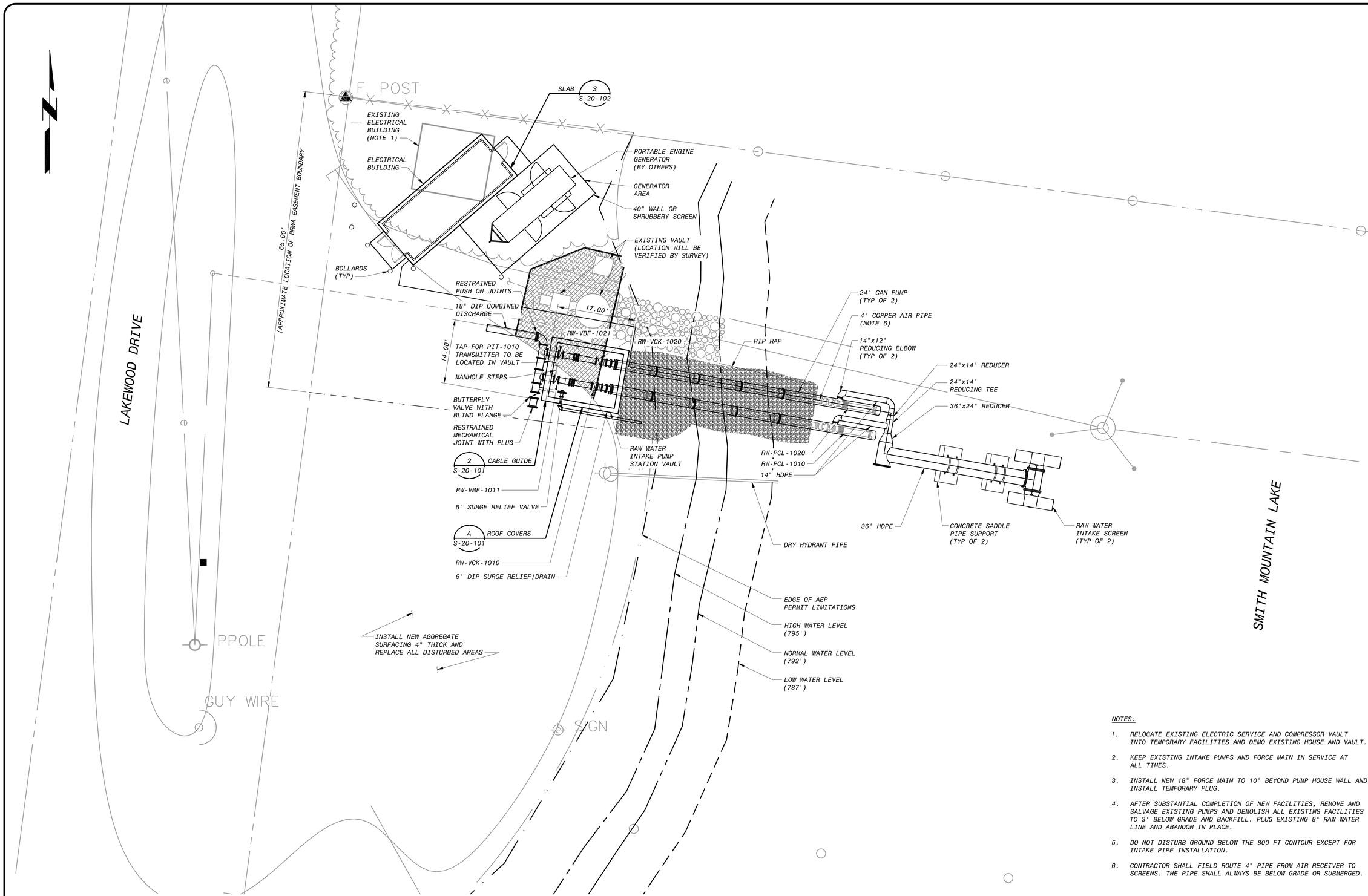

RAW WATER PUMP STATION - SITE PLAN

1" = 10'-0"

NOTES:

1. RELOCATE EXISTING ELECTRIC SERVICE AND COMPRESSOR VAULT INTO TEMPORARY FACILITIES AND DEMO EXISTING HOUSE AND VAULT.
2. KEEP EXISTING INTAKE PUMPS AND FORCE MAIN IN SERVICE AT ALL TIMES.
3. INSTALL NEW 18" FORCE MAIN TO 10' BEYOND PUMP HOUSE WALL AND INSTALL TEMPORARY PLUG.
4. AFTER SUBSTANTIAL COMPLETION OF NEW FACILITIES, REMOVE AND SALVAGE EXISTING PUMPS AND DEMOLISH ALL EXISTING FACILITIES TO 3' BELOW GRADE AND BACKFILL. PLUG EXISTING 8" RAW WATER LINE AND ABANDON IN PLACE.
5. DO NOT DISTURB GROUND BELOW THE 800 FT CONTOUR EXCEPT FOR INTAKE PIPE INSTALLATION.
6. CONTRACTOR SHALL FIELD ROUTE 4" PIPE FROM AIR RECEIVER TO SCREENS. THE PIPE SHALL ALWAYS BE BELOW GRADE OR SUBMERGED.

10' 0 10' 20'

1"=10'

PRELIMINARY - NOT FOR CONSTRUCTION

NO.	BY	CK	APP
A			

DATE	REVISIONS AND RECORD OF ISSUE
02/20/15	GMP DRAWINGS

50.3130 - Civil Drawings

C-20-101.dwg

XREF1:
XREF2:
XREF3:
XREF4:

SAVED: KOE49353, 2/27/2015 9:22:31 AM
PLOTTED:
USER: KOE49353
DWG VER: 1000

BLACK & VEATCH
Building a world of difference.
Black & Veatch Corporation
Virginia Beach, VA

BEDFORD REGIONAL WATER AUTHORITY
SMITH MOUNTAIN LAKE WTP &
RAW WATER PUMPING STATION / INTAKE

CIVIL
INTAKE STRUCTURE
PLAN - 2 SUBMERSIBLE TURBINE PUMPS

DESIGNED:
DETAILED:
CHECKED:
APPROVED:
DATE:

0 1/2 1
IF THIS BAR DOES NOT MEASURE 1" THEN DRAWING IS NOT TO FULL SCALE

PROJECT NO.
182262

C-20-101
SHEET
OF

F07000
D7000

NOTES:

1. STRIP AND SAVE TOP SOIL.
2. REPAIR ALL DAMAGED GRAVEL SURFACING TO LIKE NEW CONDITION.
3. DO NOT DISTURB GROUND BELOW THE 800 FT CONTOUR EXCEPT FOR INTAKE PIPE INSTALLATION.

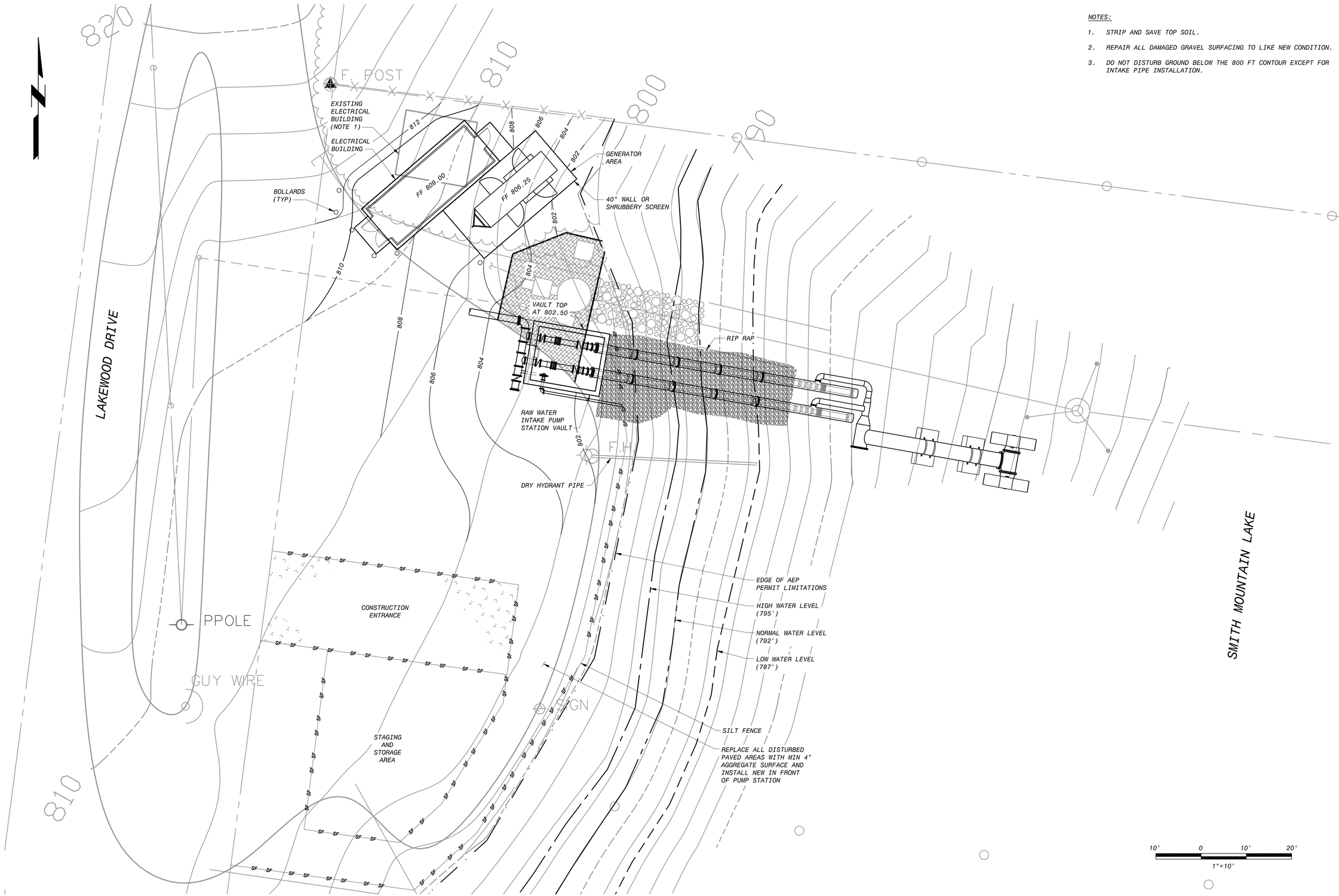

RAW WATER PUMP STATION - GRADING PLAN
1" = 10'-0"

PRELIMINARY - NOT FOR CONSTRUCTION

NO.	BY	CK	APP
A			

DATE	REVISIONS AND RECORD OF ISSUE
02/20/15	GMP DRAWINGS

50.3130 - Civil Drawings
C-20-102.dwg
SAVED: KOE49353, 2/24/2015 10:46:50 AM
PLOTTED:
USER: KOE49353
XREF1:
XREF2:
XREF3:
XREF4:
DWG VER: 1000

BLACK & VEATCH
Building a world of difference.
Black & Veatch Corporation
Virginia Beach, VA

BEDFORD REGIONAL WATER AUTHORITY
SMITH MOUNTAIN LAKE WTP &
RAW WATER PUMPING STATION / INTAKE

CIVIL
INTAKE STRUCTURE
GRADING PLAN

DESIGNED:
DETAILED:
CHECKED:
APPROVED:
DATE:

0 1/2 1
IF THIS BAR DOES NOT MEASURE 1" THEN DRAWING IS NOT TO FULL SCALE

PROJECT NO.
182262

C-20-102
SHEET
OF

F07000
D7000

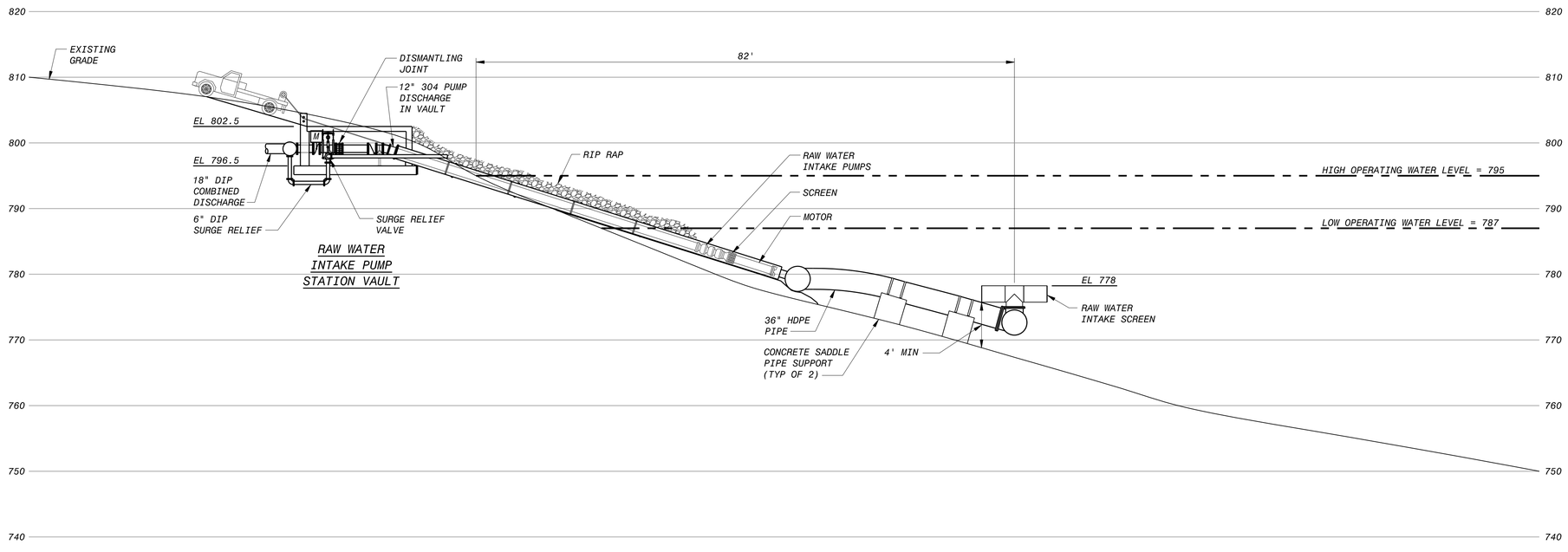

INTAKE STRUCTURE - PROFILE

SCALE 1"=10'

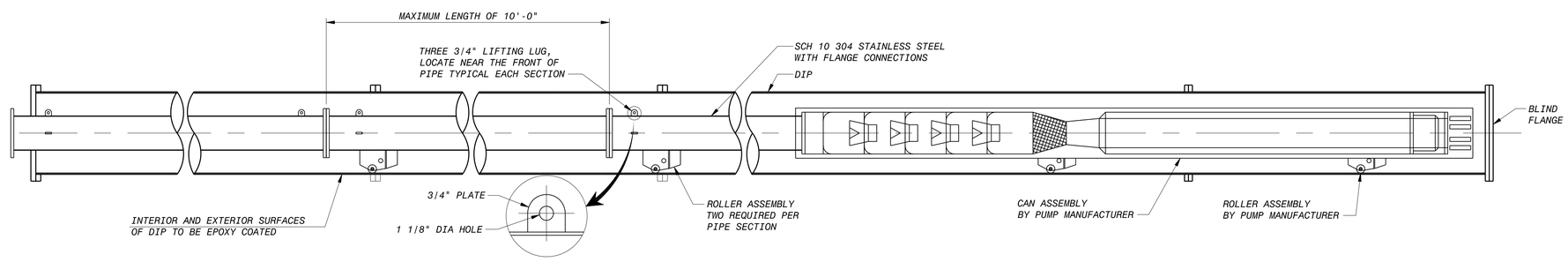

PUMP PROFILE

SCALE 3/8"=1'-0"

10' 0 10' 20'
1"=10'

12" 6" 0 1' 2' 3' 4' 5' 6' 7'
3/8"=1'-0"

PRELIMINARY - NOT FOR CONSTRUCTION

NO.	BY	CK	APP
A			

02/20/15 GMP DRAWINGS
DATE REVISIONS AND RECORD OF ISSUE

50.3130 - Civil Drawings
C-20-301.dwg

XREF1:
XREF2:
XREF3:
XREF4:

SAVED: KOE49353, 2/20/2015 8:37:00 AM
PLOTTED:
USER: KOE49353 DWG VER: 1001

BLACK & VEATCH
Building a world of difference.
Black & Veatch Corporation
Virginia Beach, VA

BEDFORD REGIONAL WATER AUTHORITY
SMITH MOUNTAIN LAKE WTP &
RAW WATER PUMPING STATION / INTAKE

CIVIL
INTAKE STRUCTURE
PROFILE - 2 SUBMERSIBLE TURBINE PUMPS

DESIGNED:
DETAILED:
CHECKED:
APPROVED:
DATE:

0 1/2 1
IF THIS BAR DOES NOT MEASURE 1" THEN DRAWING IS NOT TO FULL SCALE

PROJECT NO.
182262

C-20-301
SHEET
OF

FD7000
D7000

ORIGINAL
TAX #233-A-40B
PROPERTY OF
THE BOARD OF SUPERVISORS
OF BEDFORD COUNTY, VIRGINIA
PARCEL 1
77.2314

S 33°13'52" W
905.47'

S 83°42'30" W
953.30'

TAX #233-A-40A
COMMONWEALTH OF VIRGINIA
DEPARTMENT OF HIGHWAYS
AND TRANSPORTATION
D.B. 579, PG. 471
D.B. 966, PG. 644

ORIGINAL
TAX #233-A-40
PROPERTY OF
THE BOARD OF SUPERVISORS
OF BEDFORD COUNTY, VIRGINIA
PARCEL 2
15.9676

S 06°36'33" W
151.39'

N 83°32'08" W
87.34'

S 01°53'58" W
164.08'

GAC
CONTACTOR

PEDESTRIAN
GATE

EXISTING
BUILDING
TO REMAIN

SURFACE
TREATMENT
AREA

CHAIN LINK
FENCE

APPROXIMATE
LOCATION
TAX #233-A-38
CEMETERY
OWNER UNKNOWN
P.B. 38, PG. 307

45' DIA
25' DEEP
(250,000 GAL)
ABOVE GROUND
GLASS LINED
STEEL TANK

SEE SHEET
M-60-101

GAC PUMP
AREA

FIRE HYDRANT
(TYP OF 3)

SEE SHEET
M-80-101

HYPO FEED
MANHOLE

FLOW METER
VAULT
SEE SHEET
M-90-101

AUTOMATIC
GATE WITH
VOICE STANCHION

ASPHALT ROADWAY

BOLLARD
(TYP)

RADFORD CHURCH ROAD
VA. SEC ROUTE #654
(R/W VARIES)

MEMBRANE/ADMIN
BUILDING

ASPHALT
PARKING
LOT

ASPHALT
PARKING
LOT

STAGING AND
STORAGE AREA

60'x20'
CONSTRUCTION
ENTRANCE

PEDESTRIAN
GATE

SURFACE TREATMENT
ROADWAY

MANUAL GATE

SURFACE TREATMENT
ROADWAY

EXISTING ASPHALT ROADWAY

FLOW METER
VAULT
SEE SHEET
M-90-101

FUTURE
BULK WATER
FILL STATION

STORMWATER RETENTION
TREATMENT AREA

22' DIA RAW WATER
STORAGE TANK

BACK UP
GENERATOR PAD

EX. 28' PERMAMENT
S.S.E. AND ACCESS EASEMENT
P.B. 46, PG. 262

EX. 21' PERMAMENT
ACCESS EASEMENT
P.B. 46, PG. 262

N 70°58'14" E
929.72'

ORIGINAL
TAX #233-A-40D
PROPERTY OF
BEDFORD REGIONAL
WATER AUTHORITY
PARCEL 1
0.1952

EXISTING ASPHALT ROADWAY

EXISTING
PARKING LOT

EX. 21' PERMAMENT
S.S.E.
P.B. 46, PG. 262

N 03°07'07" W
1063.98'

40' 20' 0 40' 80'
1"=40'

MEMBRANE BUILDING - SITE PLAN
1" = 40'-0"

PRELIMINARY - NOT FOR CONSTRUCTION

NO.	BY	CK	APP
A			

DATE	REVISIONS AND RECORD OF ISSUE
02/20/15	GMP DRAWINGS

50.3130 - Civil Drawings
C-30-101.dwg
SAVED: VAW16843, 2/18/2015 2:14:39 PM
PLOTTED:
USER: KOE49353
DWG VER: 1001

XREF1: 182262-C-30-Membrane-01.dwg
XREF2: BORDER.dwg
XREF3: 2D-A-30-MEMBRANE.dwg
XREF4: 192262-C-30-Membrane-01-E.dwg

BLACK & VEATCH
Building a world of difference.

Black & Veatch Corporation
Virginia Beach, VA

BEDFORD REGIONAL WATER AUTHORITY
SMITH MOUNTAIN LAKE WTP &
RAW WATER PUMPING STATION / INTAKE

CIVIL
MEMBRANE BUILDING
SITE PLAN

DESIGNED:
DETAILED:
CHECKED:
APPROVED:
DATE:

0 1/2 1
IF THIS BAR DOES NOT MEASURE 1" THEN DRAWING IS NOT TO FULL SCALE

PROJECT NO.
182262

C-30-101
SHEET
OF

FD7000_PW
D7000

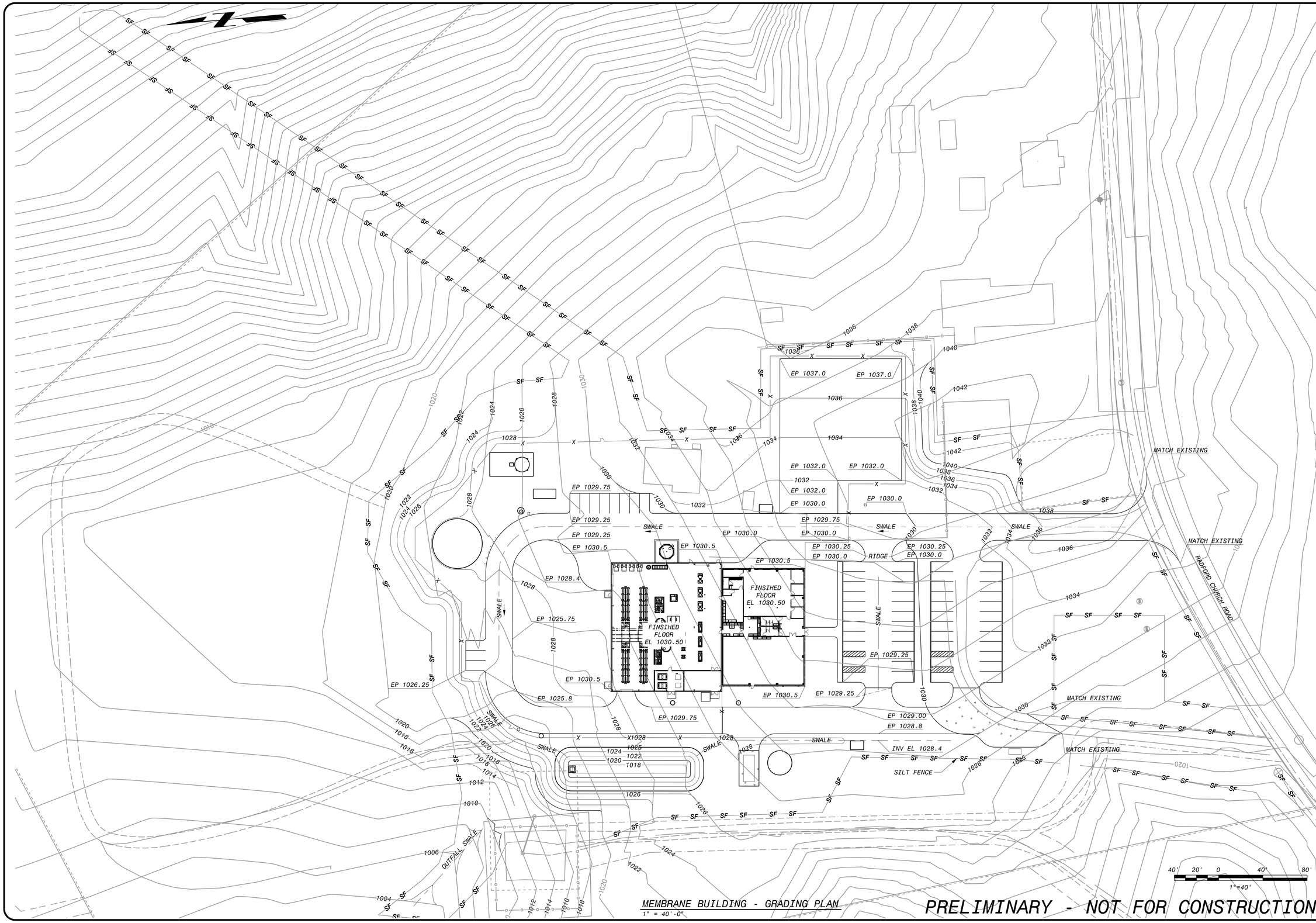

MEMBRANE BUILDING - GRADING PLAN
1" = 40'-0"

PRELIMINARY - NOT FOR CONSTRUCTION

NO.	BY	CK	APP
A			

DATE	REVISIONS AND RECORD OF ISSUE
02/20/15	GMP DRAWINGS

50-3130 - Civil Drawings
C-30-102.dwg
SAVED: KOE49353, 2/25/2015 8:11:36 AM
PLOTTED:
USER: KOE49353 | DWG VER: 1000

XREF1:20-S-30-MEMBRANE.dwg
XREF2:20-A-30-MEMBRANE.dwg
XREF3:192262-C-30-Membrane-01-E.dwg
XREF4:192262-C-30-Membrane-01.dwg

BLACK & VEATCH
Building a world of difference.
Black & Veatch Corporation
Virginia Beach, VA

BEDFORD REGIONAL WATER AUTHORITY
SMITH MOUNTAIN LAKE WTP & RAW WATER PUMPING STATION / INTAKE

CIVIL
MEMBRANE BUILDING
GRADING PLAN

DESIGNED:
DETAILED:
CHECKED:
APPROVED:
DATE:

0 1/2 1
IF THIS BAR DOES NOT MEASURE 1" THEN DRAWING IS NOT TO FULL SCALE

PROJECT NO.
182262

C-30-102
SHEET
OF

FD7000_PW
D7000

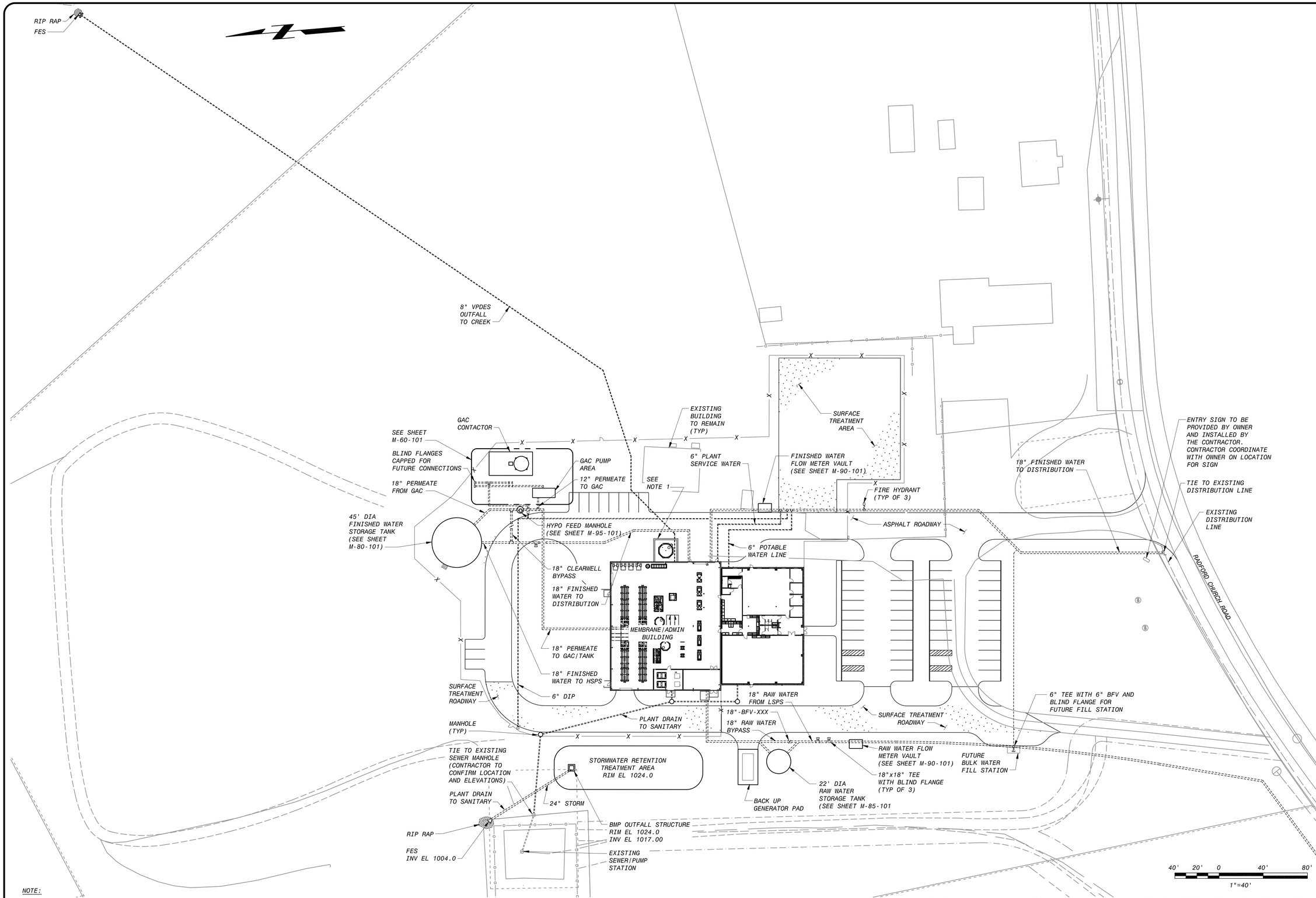

NOTE:

1. PROVIDE 12"x12"x12" SUMP WITH MUD VALVE AND 8" PIPE.

MEMBRANE BUILDING - YARD PIPING AND UTILITY PLAN

1" = 40'-0"

PRELIMINARY - NOT FOR CONSTRUCTION

NO.	BY	CK	APP
A			

DATE	REVISIONS AND RECORD OF ISSUE
02/20/15	GMP DRAWINGS

50-3130 - Civil Drawings

C-30-103.dwg

SAVED: KOE49353, 3/5/2015 8:05:39 AM

PLOTTED:

USER: KOE49353 | DWG VER: 1000

XREF1: 20-S-30-MEMBRANE.dwg

XREF2: 20-A-30-MEMBRANE.dwg

XREF3: 182262-C-30-Membrane-01.dwg

XREF4: 182262-C-30-Membrane-01-E.dwg

BLACK & VEATCH
Building a world of difference.

Black & Veatch Corporation
Virginia Beach, VA

BEDFORD REGIONAL WATER AUTHORITY
SMITH MOUNTAIN LAKE WTP &
RAW WATER PUMPING STATION / INTAKE

CIVIL
MEMBRANE BUILDING
YARD PIPING AND UTILITY PLAN

DESIGNED:
DETAILED:
CHECKED:
APPROVED:
DATE:

0 1/2 1

IF THIS BAR DOES NOT MEASURE 1" THEN DRAWING IS NOT TO FULL SCALE

PROJECT NO.
182262

C-30-103
SHEET
OF

FD7000_PW
D7000

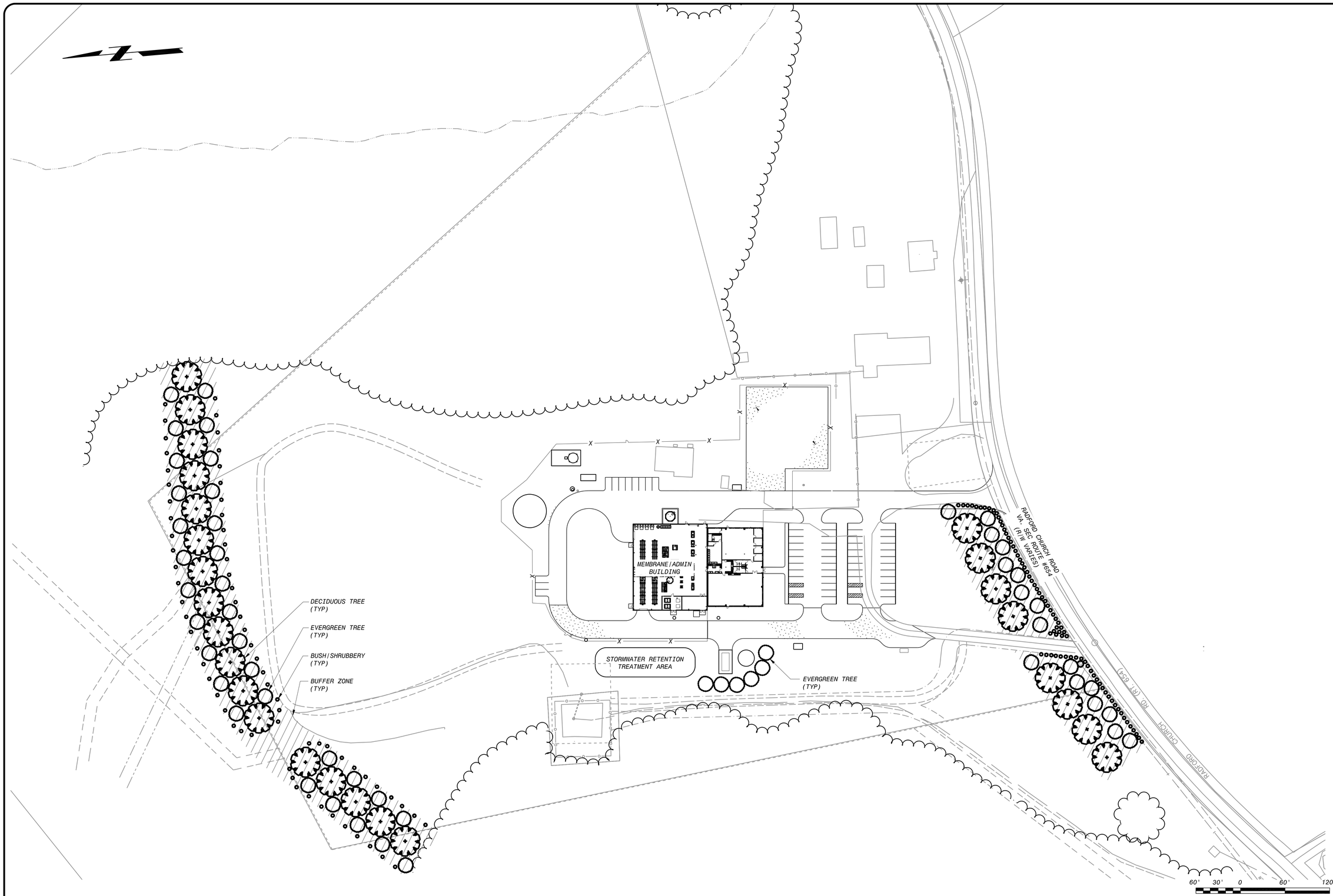

MEMBRANE BUILDING - LANSCAPING PLAN
1" = 60'-0"

PRELIMINARY - NOT FOR CONSTRUCTION

DATE	REVISIONS AND RECORD OF ISSUE	NO.	BY	CK	APP
02/20/15	GMP DRAWINGS	A			

50-3130 - Civil Drawings
C-30-104.dwg
SAVED: KOE49353, 3/5/2015 12:16:32 PM
PLOTTED:
USER: KOE49353
XREF1:2D-S-30-MEMBRANE.dwg
XREF2:2D-M-30-MEMBRANE-B1.dwg
XREF3:2D-C-30-LANDSCAPE.dwg
XREF4:2D-A-30-MEMBRANE-B1.dwg
DWG VER: 1000

BLACK & VEATCH
Building a world of difference.

Black & Veatch Corporation
Virginia Beach, VA

BEDFORD REGIONAL WATER AUTHORITY
SMITH MOUNTAIN LAKE WTP &
RAW WATER PUMPING STATION / INTAKE

CIVIL
MEMBRANE/ADMIN BUILDING
LANDSCAPING PLAN

DESIGNED:
DETAILED:
CHECKED:
APPROVED:
DATE:

0 1/2 1
IF THIS BAR DOES NOT MEASURE 1" THEN DRAWING IS NOT TO FULL SCALE

PROJECT NO.
182262

C-30-104
SHEET
OF

FD7000_PW
D7000

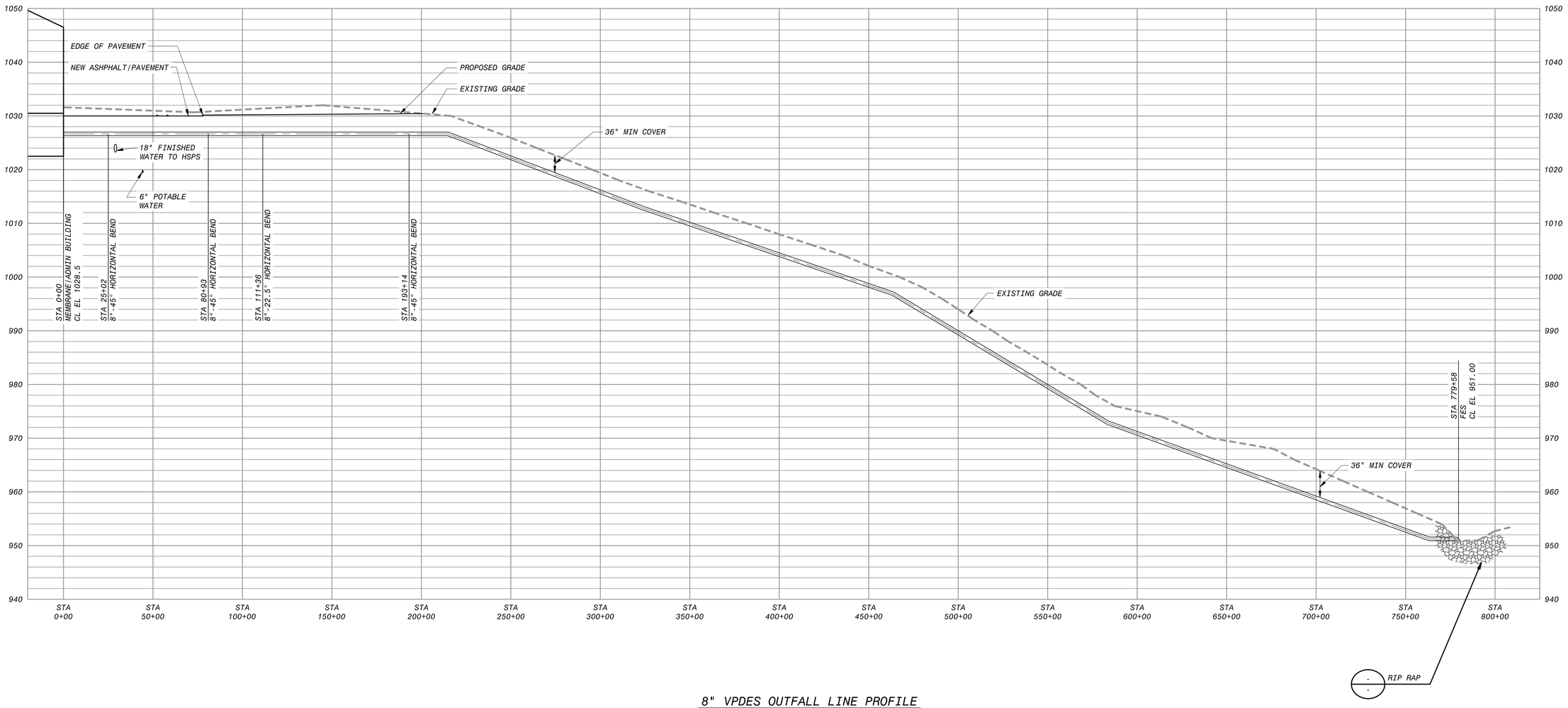

8" VPDES OUTFALL LINE PROFILE

VERT 1" = 10'
HORIZ 1" = 30'

10' 0 10' 20'
1"=10'

30' 20' 10' 0 30' 60'
1"=30'

PRELIMINARY - NOT FOR CONSTRUCTION

DATE	REVISIONS AND RECORD OF ISSUE	NO.	BY	CK	APP
02/20/15	GMP DRAWINGS	A			

50-3130 - Civil Drawings
C-30-301.dwg
SAVED: KOE49353, 2/25/2015 8:00:22 AM
PLOTTED: KOE49353, 12/8/2014 8:12:
USER: KOE49353 DWG VER: 1001

XREF1: BORDER.dwg
XREF2: 20-A-30-MEMBRANE.dwg
XREF3: 182262-C-30-Membrane-01.dwg
XREF4: 20-S-30-MEMBRANE.dwg

BLACK & VEATCH
Building a world of difference.
Black & Veatch Corporation
Virginia Beach, VA

BEDFORD REGIONAL WATER AUTHORITY
SMITH MOUNTAIN LAKE WTP &
RAW WATER PUMPING STATION / INTAKE

CIVIL
MEMBRANE BUILDING
YARD PIPING PROFILES - SHEET 1 OF 2

DESIGNED:
DETAILED:
CHECKED:
APPROVED:
DATE:

0 1/2 1
IF THIS BAR DOES NOT MEASURE 1" THEN DRAWING IS NOT TO FULL SCALE

PROJECT NO.
182262

C-30-301
SHEET
OF

FD7000_PW
D7000

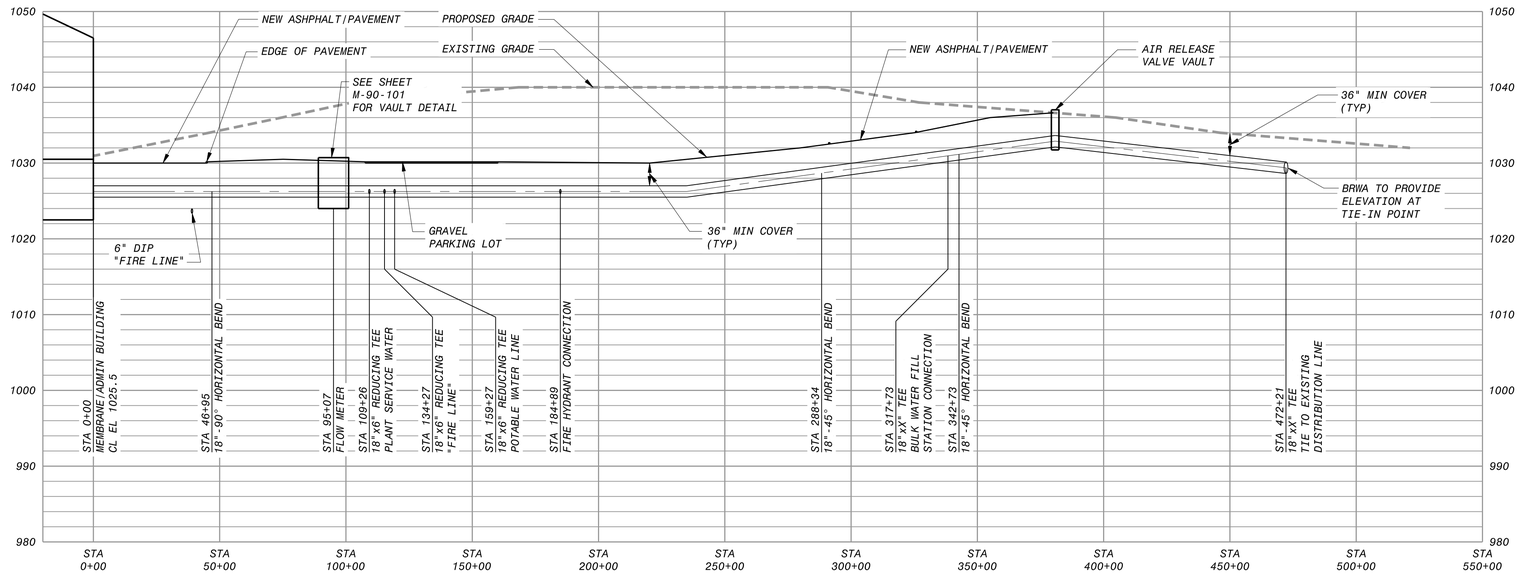

18" FINISHED WATER LINE PROFILE

VERT 1" = 10'
HORIZ 1" = 30'

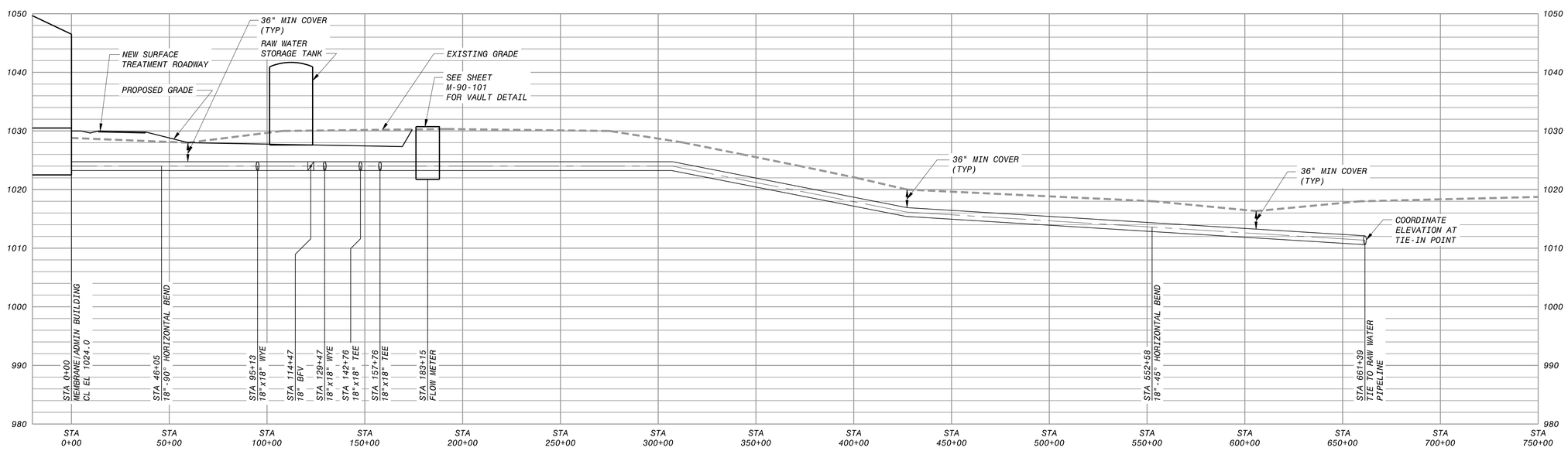

18" RAW WATER LINE PROFILE

VERT 1" = 10'
HORIZ 1" = 30'

10' 0 10' 20'
1"=10'

30' 20' 10' 0 30' 60'
1"=30'

PRELIMINARY - NOT FOR CONSTRUCTION

NO.	BY	CK	APP
A			

DATE	REVISIONS AND RECORD OF ISSUE
02/20/15	GMP DRAWINGS

50.3130 - Civil Drawings
C-30-302.dwg
SAVED: KOE49353, 3/5/2015 8:51:53 AM
PLOTTED: KOE49353, 12/8/2014 8:12:
USER: KOE49353 DWG VER: 1000

XREF1:BORDER.dwg
XREF2:20-A-30-MEMBRANE.dwg
XREF3:182262-C-30-Membrane-01.dwg
XREF4:20-S-30-MEMBRANE.dwg

BLACK & VEATCH
Building a world of difference.
Black & Veatch Corporation
Virginia Beach, VA

BEDFORD REGIONAL WATER AUTHORITY
SMITH MOUNTAIN LAKE WTP &
RAW WATER PUMPING STATION / INTAKE

CIVIL
MEMBRANE BUILDING
YARD PIPING PROFILES - SHEET 2 OF 2

DESIGNED:
DETAILED:
CHECKED:
APPROVED:
DATE:

0 1/2 1
IF THIS BAR DOES NOT MEASURE 1" THEN DRAWING IS NOT TO FULL SCALE

PROJECT NO.
182262

C-30-302
SHEET
OF

FD7000_PW
D7000

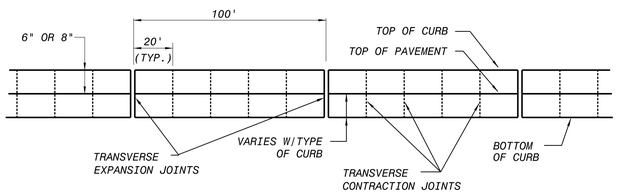

NOTE:

1. REFERENCE ARCH. DRAWINGS FOR WALKS ADJACENT TO BUILDINGS.

WALK/CURB JOINT DETAIL

NOT TO SCALE

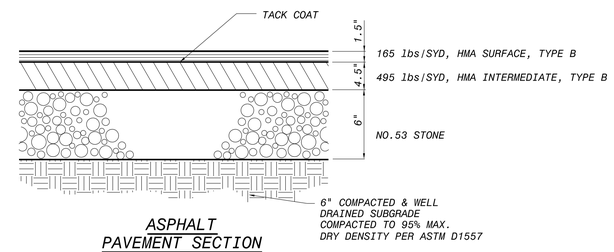

ASPHALT PAVEMENT SECTION

NOT TO SCALE

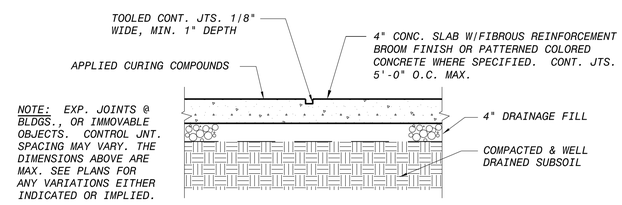

NOTE: EXP. JOINTS @ BLDGS., OR IMMOVABLE OBJECTS. CONTROL JNT. SPACING MAY VARY. THE DIMENSIONS ABOVE ARE MAX. SEE PLANS FOR ANY VARIATIONS EITHER INDICATED OR IMPLIED.

4" CONCRETE SIDEWALK DETAIL

NOT TO SCALE

PRELIMINARY - NOT FOR CONSTRUCTION

NO.	BY	CK	APP
A			

DATE	REVISIONS AND RECORD OF ISSUE
02/20/15	GMP DRAWINGS

50.3130 - Civil Drawings
C-30-501.dwg

XREF1:
XREF2:
XREF3:
XREF4:

SAVED: KOE49353, 2/25/2015 7:23:08 AM
PLOTTED:
USER: KOE49353 | DWG VER: 1000

BLACK & VEATCH
Building a world of difference.
Black & Veatch Corporation
Virginia Beach, VA

BEDFORD REGIONAL WATER AUTHORITY
SMITH MOUNTAIN LAKE WTP &
RAW WATER PUMPING STATION / INTAKE

CIVIL DETAILS

DESIGNED: ADE
DETAILED: VVV
CHECKED:
APPROVED:
DATE: DECEMBER 2014

0 1/2 1
IF THIS BAR DOES NOT MEASURE 1" THEN DRAWING IS NOT TO FULL SCALE

PROJECT NO.
182262

C-30-501
SHEET
OF

FD7000
D7000

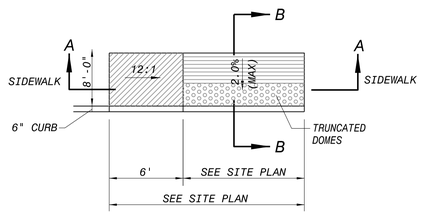

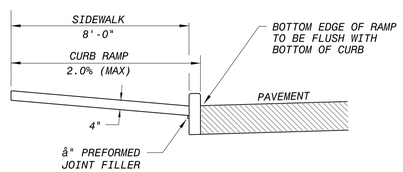

SECTION B-B

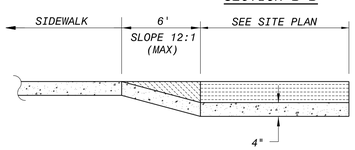

SECTION A-A

ADA RAMP DETAIL,TYPE "K"

NOT TO SCALE

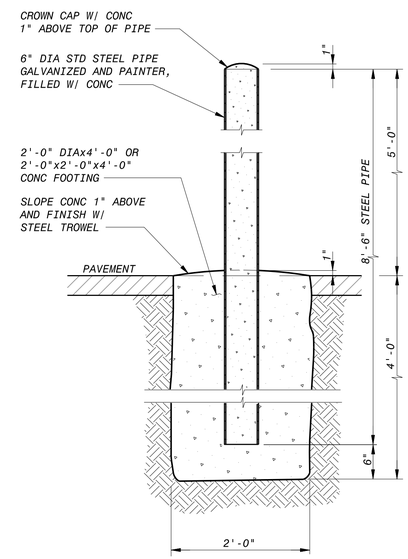

6" STD STEEL PIPE BOLLARD

NOT TO SCALE

PRELIMINARY - NOT FOR CONSTRUCTION

NO.	BY	CK	APP
A			

DATE	REVISIONS AND RECORD OF ISSUE
02/20/15	GMP DRAWINGS

50.3130 - Civil Drawings

C-30-502.dwg

SAVED:KOE49353, 3/25/2015 7:25:10 AM

PLOTTED:

USER:KOE49353

XREF1:

XREF2:

XREF3:

XREF4:

DWG VER:1000

BLACK & VEATCH
Building a world of difference.

Black & Veatch Corporation
Virginia Beach, VA

BEDFORD REGIONAL WATER AUTHORITY
SMITH MOUNTAIN LAKE WTP &
RAW WATER PUMPING STATION / INTAKE

CIVIL DETAILS

DESIGNED: ADE
DETAILED: VVV
CHECKED:
APPROVED:
DATE: DECEMBER 2014

0 1/2 1
IF THIS BAR DOES NOT MEASURE 1" THEN DRAWING IS NOT TO FULL SCALE

PROJECT NO.
182262

C-30-502
SHEET
OF

FD7000
D7000

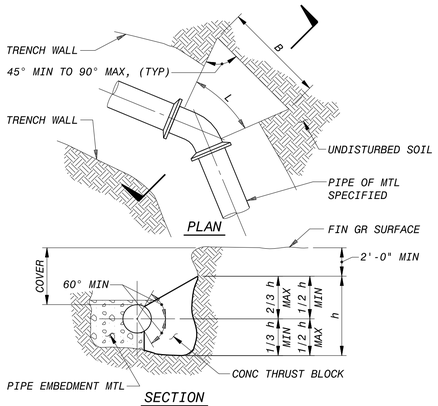

NOTES:

1. AREA OF BLOCK, A = Bxh. BLOCK AREAS AS SHOWN ON DETAIL(S).
2. $B = h = \sqrt{A}$, EXCEPT WHERE TOP OF BLOCK IS WITHIN 2 FEET FROM GROUND SURFACE, THEN B = A/h.
3. MINIMUM BLOCK DIMENSION (B & h) SHALL BE AT LEAST OD OF PIPE OR 1 FOOT FOR PIPE OD 12" OR LESS.
4. THE BOTTOM OF THE BLOCK SHALL EXTEND AT LEAST TO THE BOTTOM OF THE TRENCH IN ALL CASES.
5. L=FITTING LENGTH MINUS CLEARANCE FOR BELLS.
6. DETAIL IS SHOWN FOR CAST IRON PIPE; DETAIL IS SIMILAR FOR OTHER TYPES OF PIPE.

CONCRETE THRUST BLOCKING

NOT TO SCALE

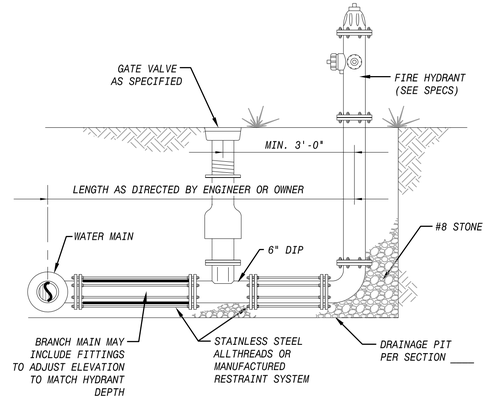

FIRE HYDRANT SETTING DETAIL

NOT TO SCALE

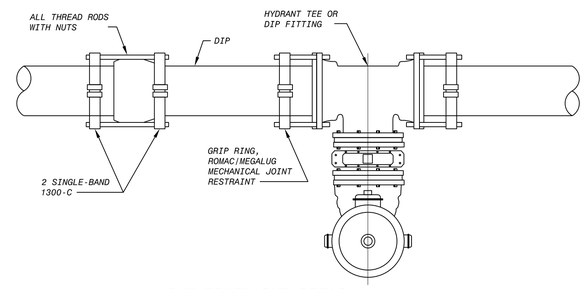

JOINT RESTRAINT DETAIL

NOT TO SCALE

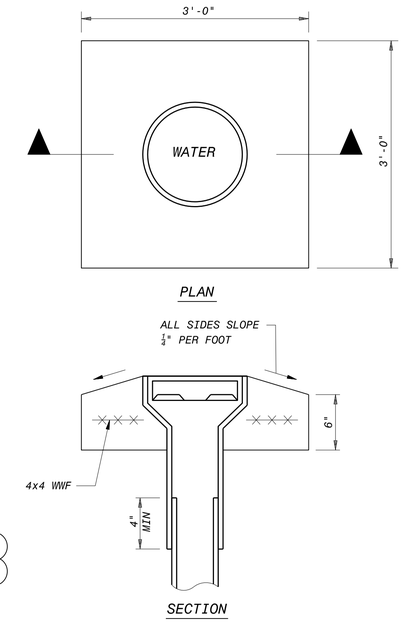

VALVE BOX AND PAD (B)

NO SCALE

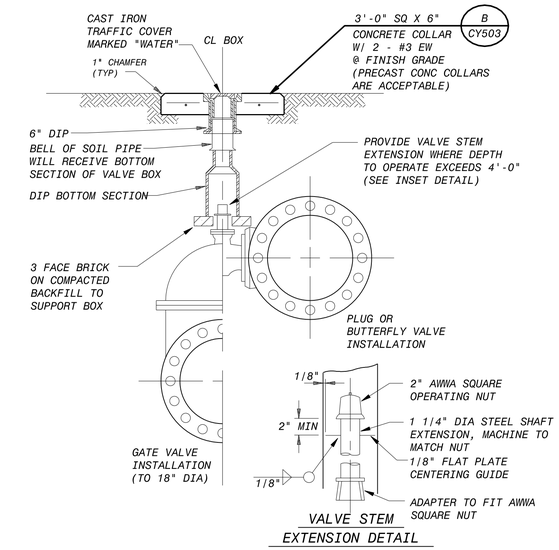

BURIED VALVE AND BOX (A)

NO SCALE

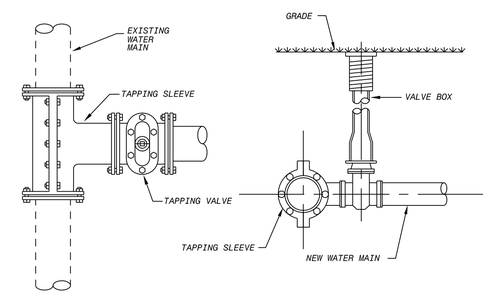

TAPPING SLEEVE & VALVE DETAIL

NOT TO SCALE

PRELIMINARY - NOT FOR CONSTRUCTION

NO.	BY	CK	APP
A			

DATE	REVISIONS AND RECORD OF ISSUE
02/20/15	GMP DRAWINGS

50.3130 - Civil Drawings
C-30-503.dwg

XREF1:
XREF2:
XREF3:
XREF4:

SAVED: VAN16843, 12/29/2014 11:56:55 AM
PLOTTED:
USER: ADE49353
DWG VER: 1000

BLACK & VEATCH
Building a world of difference.
Black & Veatch Corporation
Virginia Beach, VA

BEDFORD REGIONAL WATER AUTHORITY
SMITH MOUNTAIN LAKE WTP &
RAW WATER PUMPING STATION / INTAKE

CIVIL DETAILS

DESIGNED: ADE
DETAILED: VVV
CHECKED:
APPROVED:
DATE: DECEMBER 2014

0 1/2 1
IF THIS BAR DOES NOT MEASURE 1" THEN DRAWING IS NOT TO FULL SCALE

PROJECT NO.
182262

C-30-503
SHEET
OF

FD7000
D7000

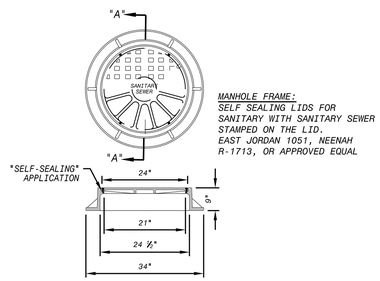

MANHOLE FRAME:
SELF SEALING LIDS FOR SANITARY WITH SANITARY SEWER STAMPED ON THE LID.
EAST JORDAN 1051, NEENAH R-1713, OR APPROVED EQUAL

SECTION "A"-"A"
SANITARY SEWER MANHOLE
FRAME AND COVER-STANDARD MANHOLE
NOT TO SCALE

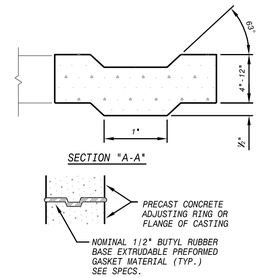

SECTION "A-A"

GASKET DETAIL
NOT TO SCALE

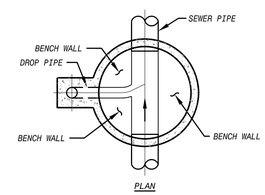

PLAN

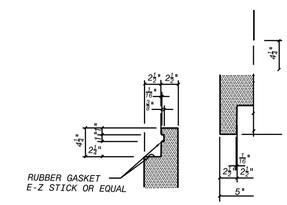

O-RING JOINT
NOT TO SCALE

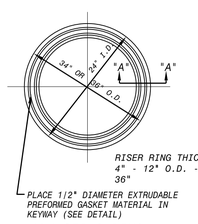

ADJUSTING RING
NOT TO SCALE

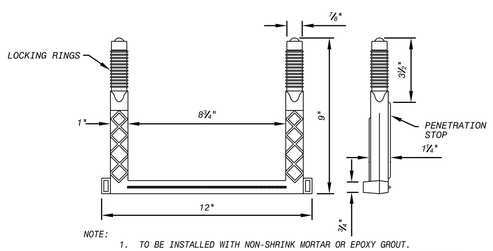

NOTE:
1. TO BE INSTALLED WITH NON-SHRINK MORTAR OR EPOXY GROUT.
2. STEPS SHALL NOT BE SITUATED DIRECTLY ABOVE INLET OR OUTLET PIPES.

FIBERGLASS REINFORCED POLYPROPYLENE MANHOLE STEP
NOT TO SCALE

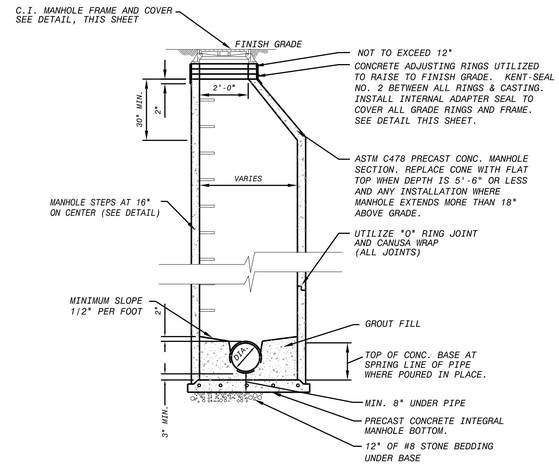

NOTES:
1.) MANHOLE SHALL CONFORM TO ASTM C-478.
2.) JOINTS SHALL CONFORM TO ASTM C-433.
3.) PIPE CONNECTIONS TO MANHOLES SHALL BE MADE WITH WATERTIGHT FLEXIBLE RUBBER BOOTS WITH STAINLESS STEEL BANDS OR FLEXIBLE WATERTIGHT GASKETS. ACCEPTABLE PRODUCTS ARE: KORE-N-SEAL AS MANUFACTURED BY CORE AND SEAL COMPANY, DURA-SEAL III AS MANUFACTURED BY DURA TECH, INC., PSX AS MANUFACTURED BY THE PRESS SEAL GASKET CORPORATION, OR APPROVED EQUAL. PIPE SEAL SHALL MEET ASTM C-443.
4.) PIPE OPENINGS IN BASE AND RISER SECTIONS SHALL BE FORMED OR CORE-DRILLED.

STANDARD PRECAST CONCRETE MANHOLE
NOT TO SCALE

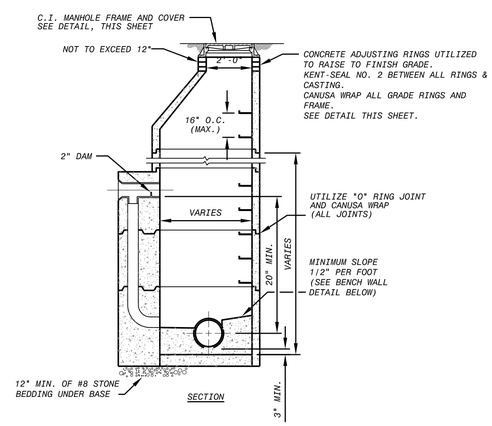

NOTES:
1.) MANHOLE SHALL CONFORM TO ASTM C-478.
2.) JOINTS SHALL CONFORM TO ASTM C-433.
3.) PIPE CONNECTIONS TO MANHOLES SHALL BE MADE WITH WATERTIGHT FLEXIBLE RUBBER BOOTS WITH STAINLESS STEEL BANDS OR FLEXIBLE WATERTIGHT GASKETS. ACCEPTABLE PRODUCTS ARE: KORE-N-SEAL AS MANUFACTURED BY CORE AND SEAL COMPANY, DURA-SEAL III AS MANUFACTURED BY DURA TECH, INC., PSX AS MANUFACTURED BY THE PRESS SEAL GASKET CORPORATION, OR APPROVED EQUAL. PIPE SEAL SHALL MEET ASTM C-443.
4.) PIPE OPENINGS IN BASE AND RISER SECTIONS SHALL BE FORMED OR CORE-DRILLED.
5.) DROP PIPE SHALL BE A MINIMUM OF 8" DIA. WITH A TYPICAL SIZING EQUAL TO INCOMING SEWER MINUS 2".

TYPICAL PRECAST CONCRETE DROP MANHOLE
NOT TO SCALE

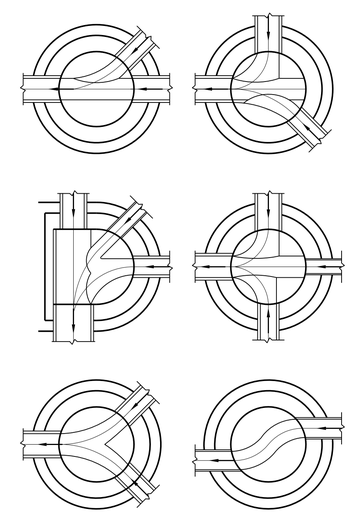

SANITARY SEWER
BENCH SLOPE = 1/2" PER FOOT
TROUGH WIDTH = PIPE DIAMETER x 1.3

STANDARD MANHOLE BENCHES
NOT TO SCALE

PRELIMINARY - NOT FOR CONSTRUCTION

NO.	BY	CK	APP
A			

02/20/15 GMP DRAWINGS
DATE REVISIONS AND RECORD OF ISSUE

50.3130 - Civil Drawings
C-30-504.dwg
SAVED: VAN16843, 12/29/2014 11:58:05 AM
PLOTTED:
USER: KOE49353
XREF1:
XREF2:
XREF3:
XREF4:
DWG VER: 1000

BLACK & VEATCH
Building a world of difference.
Black & Veatch Corporation
Virginia Beach, VA

BEDFORD REGIONAL WATER AUTHORITY
SMITH MOUNTAIN LAKE WTP &
RAW WATER PUMPING STATION / INTAKE

CIVIL DETAILS

DESIGNED: ADE
DETAILED: VVV
CHECKED:
APPROVED:
DATE: DECEMBER 2014

0 1/2 1
IF THIS BAR DOES NOT MEASURE 1" THEN DRAWING IS NOT TO FULL SCALE

PROJECT NO.
182262

C-30-504
SHEET
OF

FD7000
D7000

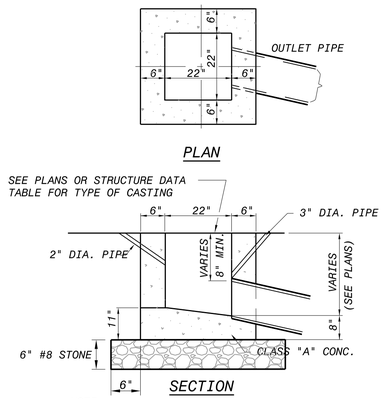

NOTE:
ONLY PRECAST OR POURED IN PLACE PERMITTED

** 2" PIPE DRAIN FROM BOTTOM OF CURB TO INLET AGGREGATE TO BE PLACED AROUND INLET END OF PIPE

*** 3" MIN. DIA. PIPE TO BE KEPT OPEN FOR DRAINAGE OF SUBGRADE OR BASE UNTIL SURFACE IS PLACED.

INLET TYPE "A"
NOT TO SCALE

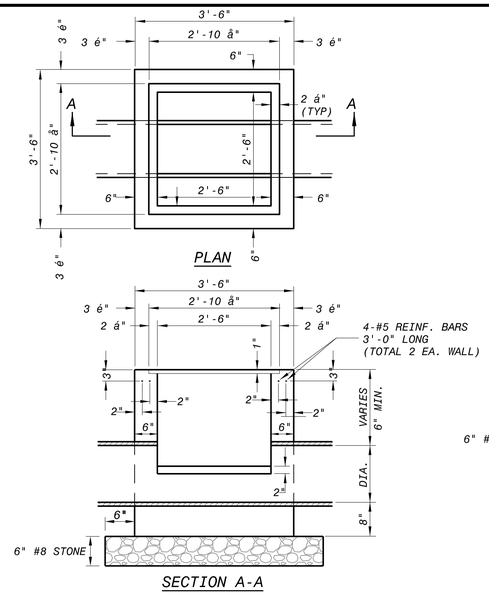

TYPE "F" INLET
NOT TO SCALE

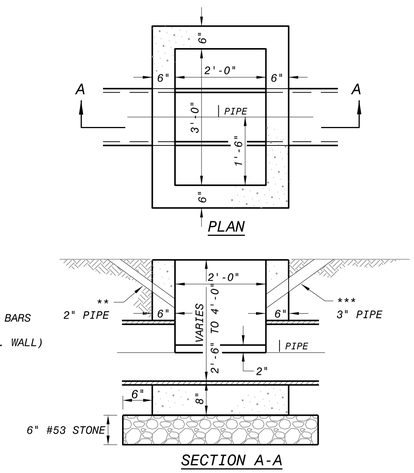

** 2" PIPE DRAIN FROM BOTTOM OF CURB TO INLET AGGREGATE TO BE PLACED AROUND INLET END OF PIPE

*** 3" MIN. DIA. PIPE TO BE KEPT OPEN FOR DRAINAGE OF SUBGRADE OR BASE UNTIL SURFACE IS PLACED.

NOTE:
STEPS MUST BE PROVIDED IN ALL STRUCTURES LARGER THAN 24" X 24".

TYPE "M" INLET
NOT TO SCALE

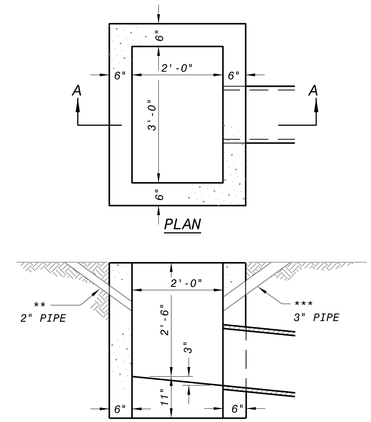

** 2" PIPE DRAIN FROM BOTTOM OF CURB TO INLET AGGREGATE TO BE PLACED AROUND INLET END OF PIPE

*** 3" MIN. DIA. PIPE TO BE KEPT OPEN FOR DRAINAGE OF SUBGRADE OR BASE UNTIL SURFACE IS PLACED.

TYPE "J" INLET
NOT TO SCALE

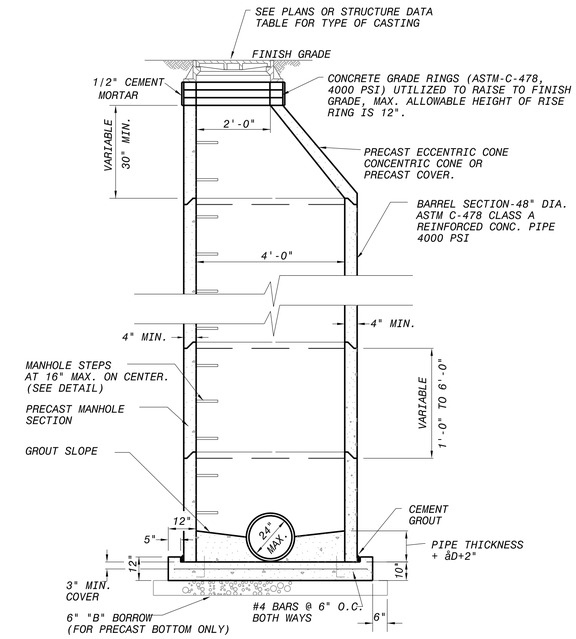

MANHOLE TYPE "C" (STORM SEWER)
NOT TO SCALE

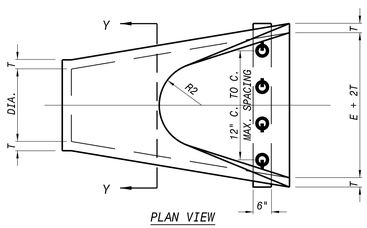

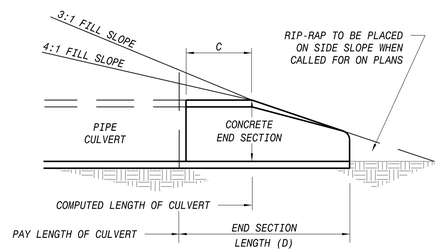

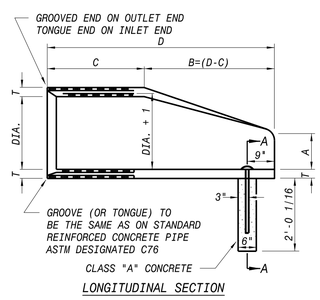

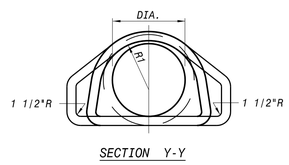

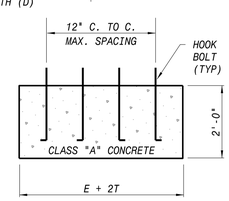

CONCRETE IN THESE END SECTIONS SHALL BE THE SAME GRADE AND STRENGTH AS SPECIFIED FOR REINFORCED CONCRETE PIPE, A.S.T.M. DESIGNATION C-76 (as set out in standard specifications.)

REINFORCEMENT IN THE "C" PORTION SHALL BE THE SAME AS SPECIFIED FOR REINFORCED CONCRETE, A.S.T.M. DESIGNATION C-76 FOR THE SIZE OF CONNECTING PIPE. (as set out in standard specifications.)

REINFORCEMENT IN THE "B" PORTION SHALL HAVE A CROSS SECTIONAL AREA EQUAL TO THAT OF ONE LAYER OF STEEL IN THE "C" PORTION.

THE END OF THE PIPE CULVERT SHALL BE PLACED IN THE CONCRETE END SECTION SO THAT THE FLOW LINES ARE FLUSH. THE JOINT SHALL BE COMPLETELY FILLED WITH MORTAR.

IN 3:1 OR 4:1 FILL SLOPE, CHANGE TO THE SLOPE OF THE END SECTION IN A SMOOTH, PLEASING TRANSITION APPROXIMATELY 10'-0" IN LENGTH.

VARIATIONS IN DIMENSIONS - THE THICKNESS OR THE CONCRETE, THE POSITION OF STEEL, AND THE INTERNAL DIAMETER OF THE PIPE SHALL CONFORM WITH THE VARIATIONS IN DIMENSIONS AS PROVIDED IN THE SPECIFICATIONS FOR REINFORCED CONCRETE CULVERT, STORM DRAIN, AND SEWER PIPE, A.S.T.M. DESIGNATION C-76.

WHERE VITRIFIED CLAY CULVERT OR CAST IRON CULVERT PIPE IS USED, A "PIPE END SECTION" COMPARABLE TO THAT AS SHOWN FOR METAL OR CONCRETE SHALL BE FURNISHED AND SHALL BE AS APPROVED BY THE ENGINEER. EXCEPT IN AREAS OF ACID OR MINE WATER, THEN THE USE OF METAL END SECTION IS PROHIBITED.

CONCRETE PIPE TOE ANCHORS SHALL BE REQUIRED ON ALL CONCRETE PIPE END SECTIONS.

DIA.	T (MIN.)	A*	C*	D*	E*	K	R1	R2	APPROX. WEIGHT
12"	2"	5"	4'-3"	6'-2"	2'-0"	1.3	10 1/8"	9"	800
15"	2 1/4"	7"	4'-0"	6'-3"	2'-6"	1.5	12 1/2"	11"	1100
18"	2 1/2"	11"	4'-1"	6'-2"	3'-0"	1.8	15 1/2"	12"	1300
21"	2 3/4"	11"	3'-6"	6'-3"	3'-6"	2.1	16 1/8"	13"	1500
24"	3"	12"	2'-8"	6'-3"	4'-0"	2.3	16 3/16"	14"	1800
27"	3 1/4"	13"	2'-5"	6'-3"	4'-6"	2.6	18 3/16"	14 1/2"	2100
30"	3 1/2"	14"	1'-10"	6'-3"	5'-0"	2.9	18 1/2"	15"	2400
33"	3 3/4"	15"	3'-6"	8'-3"	5'-6"	3.1	23 3/4"	17 1/2"	4100
36"	4"	17"	3'-1"	8'-3"	6'-0"	3.4	24 3/16"	20"	4200

* TOLERANCE ±1"

PRECAST CONCRETE END SECTION
NOT TO SCALE

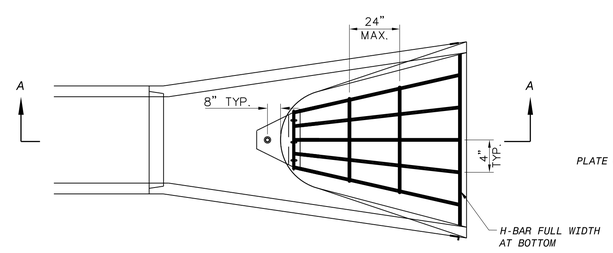

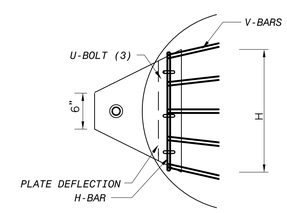

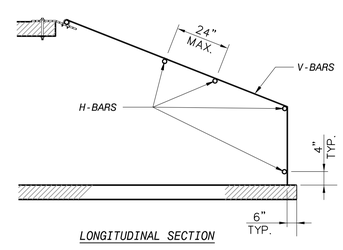

ANIMAL GUARD GRATING FOR CONCRETE END SECTION
NOT TO SCALE

APRON	V-BAR	NO. OF	H-BAR	BOLT	"H"
SIZE	SIZE	H-BARS	SIZE	DIA.	DIM.
INCHES	INCHES	REG'D	INCHES	INCHES	INCHES
ROUND PIPE APRONS					
12	1/2	3	5/8	1/2	14
15	1/2	3	5/8	1/2	16
18	1/2	4	5/8	1/2	16
21	1/2	4	5/8	1/2	16
24	5/8	4	3/4	1/2	20
27	5/8	4	3/4	1/2	20
30	5/8	4	3/4	1/2	24
36	3/4	4	1	3/4	24
42	3/4	4	1	3/4	24
48	3/4	5	1	3/4	24
54	3/4	5	1 1/2 PIPE	3/4	26
60	3/4	5	1 1/2 PIPE	3/4	28
66	3/4	6	1 1/2 PIPE	3/4	30
72	3/4	6	1 1/2 PIPE	3/4	32

NOTES:
1. BARS & PLATES ARE HOT-ROLLED STEEL.
2. BARS, PLATES, & PIPE ARE FINISHED WITH 2 COATES OF ALUMINUM PAINT.
3. BOLTS ARE GALVINIZED
4. NO REBAR THROUGH PIPES WILL BE ALLOWED
5. DEBRIS GUARD SHALL BE PLACED ON ALL END SECTIONS WHERE ENTERING INTO PONDS.
6. ALL DEBRIS GUARD SHALL BE HINGED FOR ACCESS.

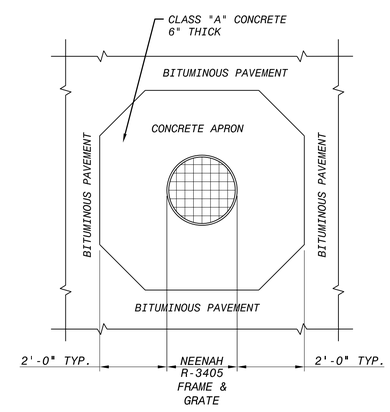

INLET APRON DETAIL
NOT TO SCALE

PRELIMINARY - NOT FOR CONSTRUCTION

DATE	REVISIONS AND RECORD OF ISSUE	NO.	BY	CK	APP
02/20/15	GMP DRAWINGS	A			

50.3130 - Civil Drawings
C-30-505.dwg
SAVED: VAN16843, 12/29/2014 11:58:57 AM
PLOTTED:
USER: KOE49353
DWG VER: 1000
XREF1:
XREF2:
XREF3:
XREF4:

BLACK & VEATCH
Building a world of difference.
Black & Veatch Corporation
Virginia Beach, VA

BEDFORD REGIONAL WATER AUTHORITY
SMITH MOUNTAIN LAKE WTP &
RAW WATER PUMPING STATION / INTAKE

CIVIL DETAILS

DESIGNED: ADE
DETAILED: VVV
CHECKED:
APPROVED:
DATE: DECEMBER 2014

0 1/2 1
IF THIS BAR DOES NOT MEASURE 1" THEN DRAWING IS NOT TO FULL SCALE

PROJECT NO.
182262

C-30-505
SHEET
OF

FD7000
D7000

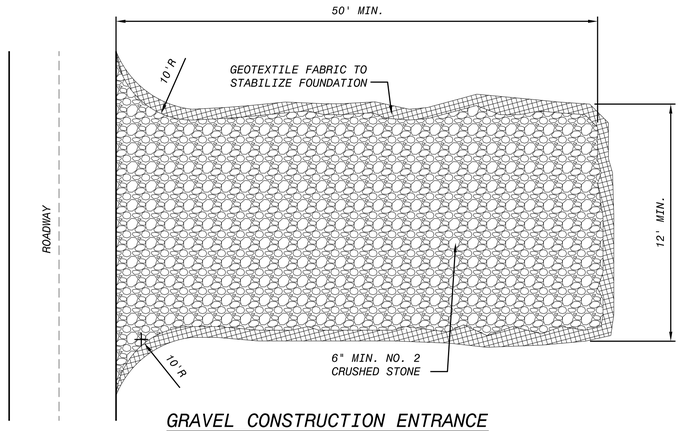

GRAVEL CONSTRUCTION ENTRANCE

NOT TO SCALE

TEMPORARY GRAVEL CONSTRUCTION ENTRANCE INSTALLATION REQUIREMENTS

1. AVOID LOCATING ON STEEP SLOPES OR AT CURVES IN PUBLIC ROADS.
2. REMOVE ALL VEGETATION AND OTHER OBJECTIONABLE MATERIAL FROM THE FOUNDATION AREA, AND GRADE AND CROWN FOR POSITIVE DRAINAGE.
3. IF SLOPE TOWARDS THE ROAD EXCEEDS 2%, CONSTRUCT A 6-8 in. HIGH WATER BAR (RIDGE) WITH 3:1 SIDE SLOPES ACROSS THE FOUNDATION AREA ABOUT 15 ft. FROM THE ENTRANCE TO DIVERT RUNOFF AWAY FROM THE ROAD.
4. INSTALL PIPE UNDER THE PAD IF NEEDED TO MAINTAIN PROPER PUBLIC ROAD DRAINAGE.
5. IF WET CONDITIONS ARE ANTICIPATED, PLACE GEOTEXTILE FABRIC ON THE GRADED FOUNDATION TO IMPROVE STABILITY.
6. PLACE STONE TO DIMENSIONS AND GRADE SHOWN IN THE EROSION/SEDIMENT CONTROL PLAN AND GRADING GRADING PLAN, LEAVING THE SURFACE SMOOTH AND SLOPED FOR DRAINAGE.
7. DIVERT ALL SURFACE RUNOFF AND DRAINAGE FROM THE STONE PAD TO A SEDIMENT TRAP OR BASIN.

TEMPORARY GRAVEL CONSTRUCTION ENTRANCE MAINTENANCE REQUIREMENTS

1. INSPECT ENTRANCE PAD AND SEDIMENT AREA WEEKLY, AFTER STORM EVENTS, AND AFTER OF HEAVY USE.
2. RESHAPE PAD AS NEEDED FOR DRAINAGE AND RUNOFF CONTROL.
3. TOP DRESS WITH CLEAN STONE AS NEEDED.
4. IMMEDIATELY REMOVE MUD AND SEDIMENT TRACKED OR WASHED ONTO PUBLIC ROADS BY BRUSHING OR SWEEPING. FLUSHING SHOULD ONLY BE USED IF THE WATER IS CONVEYED INTO A SEDIMENT TRAP OR BASIN.
5. REPAIR ANY BROKEN PAVEMENT IMMEDIATELY.

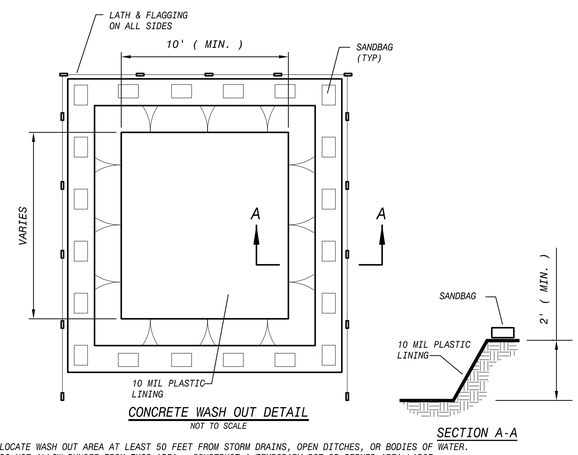

CONCRETE WASH OUT DETAIL

NOT TO SCALE

SECTION A-A

LOCATE WASH OUT AREA AT LEAST 50 FEET FROM STORM DRAINS, OPEN DITCHES, OR BODIES OF WATER. DO NOT ALLOW RUNOFF FROM THIS AREA. CONSTRUCT A TEMPORARY PIT OR BERMED AREA LARGE ENOUGH FOR LIQUID AND SOLID WASTE.

DRAIN WASH OUT WASTES INTO THE TEMPORARY PIT WHERE THE CONCRETE CAN SET, BE BROKEN UP AND BE DISPOSED OF ACCORDING TO LOCAL STANDARDS.

TEMPORARY WASH OUT FACILITIES SHOULD HAVE A TEMPORARY PIT AREA OF SUFFICIENT VOLUME TO COMPLETELY CONTAIN ALL LIQUID AND SOLID WASTE CONCRETE MATERIALS GENERATED DURING WASH OUT PROCEDURES.

ONLY CONCRETE FROM MIXER TRUCK CHUTES SHOULD BE WASHED INTO WASH OUT PIT.

LATH AND FLAGGING SHOULD BE COMMERCIAL TYPE.

PLASTIC LINING MATERIAL SHOULD BE A MINIMUM OF 10 MIL POLYETHYLENE SHEETING AND SHOULD BE FREE OF HOLES, TEARS, OR OTHER DEFECTS THAT COMPROMISE THE IMPERMEABILITY OF THE MATERIAL.

TEMPORARY CONCRETE WASHOUT FACILITIES SHOULD BE MAINTAINED TO PROVIDE ADEQUATE HOLDING CAPACITY WITH A MINIMUM FREEBOARD OF 12 INCHES FOR BELOW GRADE FACILITIES. MAINTAINING TEMPORARY CONCRETE WASH OUT FACILITIES SHOULD INCLUDE REMOVING AND DISPOSING OF HARDENED CONCRETE AND RETURNING THE FACILITY TO A FUNCTIONAL CONDITION. HARDENED CONCRETE MATERIALS SHOULD BE REMOVED AND DISPOSED OF.

CONCRETE WASHOUT AREAS SHALL BE CLEARLY MARKED WITH LATH & FLAGGING AND A SIGN POSTED AND LABELED "CONCRETE WASHOUT"

THE CONCRETE WASH OUT AREA SHALL BE REPAIRED AND/OR ENLARGED AS NECESSARY TO MAINTAIN CAPACITY FOR WASTED CONCRETE.
AT THE END OF CONSTRUCTION, ALL CONCRETE SHALL BE REMOVED FROM THE SITE AND DISPOSED OF IN ACCORDANCE W / LOCAL STANDARDS AND REQUIREMENTS.

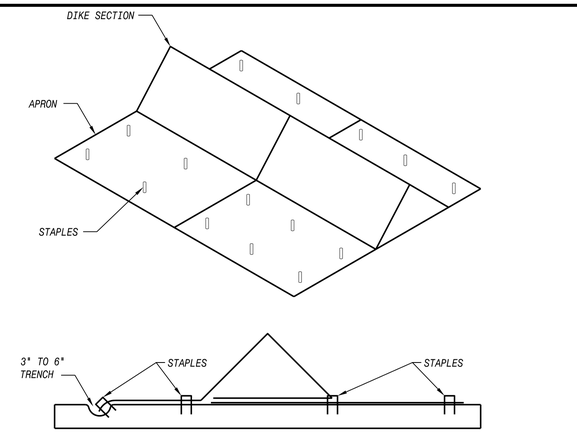

TRIANGULAR SILT DIKE INASTALLATION ON SOIL

NOT TO SCALE

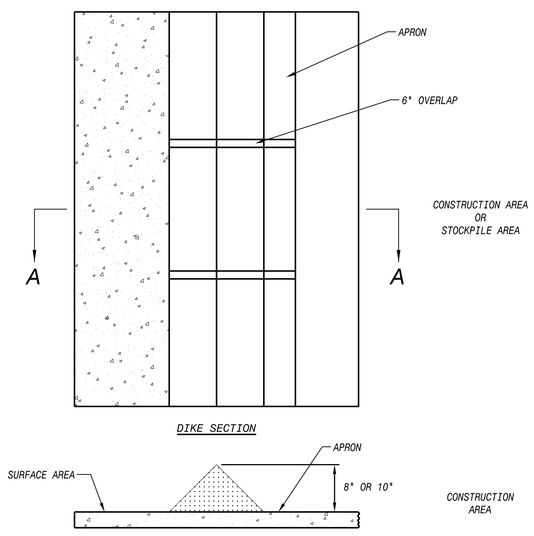

NOTE:

IF THE SURFACE AREA IS CONCRETE, ADHESIVES SUCH AS LIQUID NAIL OR SAND BAGS SHALL BE USED. IF IT IS ON ASPHALT SURFACE, A RUBBERIZED ASPHALT EMULSION CAN BE USED. THE TACKING AGENT MUST BE APPLIED UNDER THE FULL LENGTH OF THE BARRIER SECTION AND THE APRON.

TRIANGULAR SILT DIKE INASTALLATION ON CONCRETE OR ASPHALT

NOT TO SCALE

TRIANGULAR SILT DIKE MAINTENANCE REQUIREMENTS

1. INSPECT WITHIN 24 HOURS OF RAIN EVENT AND AT LEAST ONCE EVERY SEVEN CALENDAR DAYS.
2. IF DIKE FABRIC TEARS, STARTS TO DECOMPOSE, OR IN ANY WAY BECOMES INEFFECTIVE, REPLACE THE AFFECTED PORTION IMMEDIATELY. NOTE: ALL REPAIRS SHOULD MEET SPECIFICATIONS AS OUTLINED WITHIN THIS MEASURE.
3. REMOVE DEPOSITED SEDIMENT WHEN IT IS CAUSING THE FILTER FABRIC TO BULGE OR WHEN IT REACHES ONE-HALF THE HEIGHT OF THE DIKE AT ITS LOWEST POINT. WHEN CONTRIBUTING DRAINAGE AREA HAS BEEN STABILIZED, REMOVE THE DIKE AND SEDIMENT DEPOSITS, GRADE THE SITE TO BLEND WITH THE SURROUNDING AREA, AND STABILIZE.

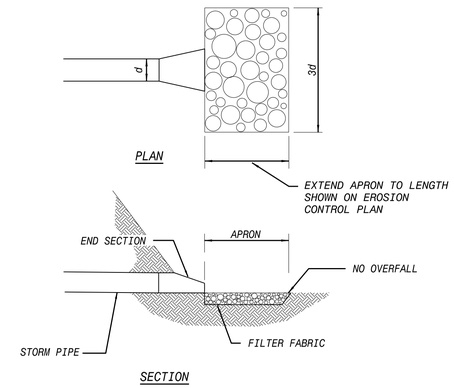

NOTES:

1. FOUNDATION SHALL BE GEOTEXTILE FABRIC FOR STABILIZATION AND WELL-GRADED FILTRATION OR GRAVEL FILTER LAYER AT LEAST 6 IN. THICK
2. STONE SHALL BE HARD, ANGULAR, AND HIGHLY WEATHER-RESISTANT RIPRAP STONE AT A THICKNESS OF 12 IN. MINIMUM OR TWO TIMES THE STONE DIAMETER, WHICHEVER IS GREATER.
3. MAKE SURE THE TOP OF THE RIPRAP APRON IS LEVEL WITH OR SLIGHTLY BELOW THE RECEIVING STREAM. (RIPRAP SHOULD NOT RESTRICT THE CHANNEL OR PRODUCE AN OVERFALL).

OUTLET PROTECTION DETAIL

NOT TO SCALE

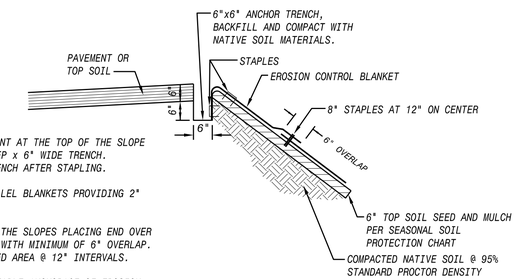

NOTES:

1. BEGIN BLANKET PLACEMENT AT THE TOP OF THE SLOPE BY ANCHORING IN A 6" DEEP x 6" WIDE TRENCH. BACKFILL AND COMPACT TRENCH AFTER STAPLING.

2. STAPLE EDGES OF PARALLEL BLANKETS PROVIDING 2" OVERLAP MINIMUM.

3. SPLICE BLANKETS DOWN THE SLOPES PLACING END OVER END (shingle style) WITH MINIMUM OF 6" OVERLAP. STAPLE THROUGH OVERLAPPED AREA @ 12" INTERVALS.

4. SEE DETAIL D-2 FOR STAPLE ANCHORAGE OF EROSION CONTROL MAT.

EROSION CONTROL BLANKET FOR SLOPE STABILIZATION

NOT TO SCALE

EROSION CONTROL BLANKET (SURFACE APPLIED) MAINTENANCE REQUIREMENTS

1. DURING VEGETATIVE ESTABLISHMENT INSPECT AFTER STORM EVENTS FOR ANY EROSION BELOW THE BLANKET.
2. IF ANY AREA SHOWS EROSION PULL BACK THAT PORTION OF THE BLANKET COVERING IT, ADD SOIL, RE-SEED THE AREA, AND RE-LAY AND STAPLE THE BLANKET.
3. AFTER VEGETATIVE ESTABLISHMENT, CHECK THE TREATED AREA WEEKLY.

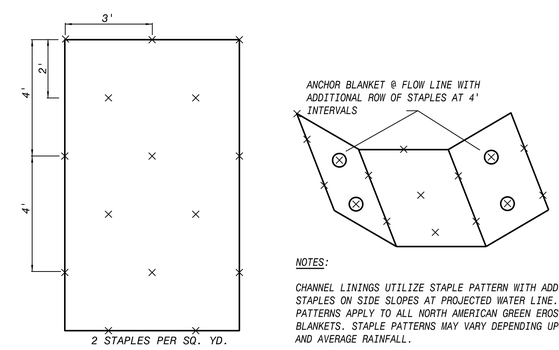

NOTES:

CHANNEL LININGS UTILIZE STAPLE PATTERN WITH ADDITIONAL STAPLES ON SIDE SLOPES AT PROJECTED WATER LINE. STAPLE PATTERNS APPLY TO ALL NORTH AMERICAN GREEN EROSION CONTROL BLANKETS. STAPLE PATTERNS MAY VARY DEPENDING UPON SOIL TYPE AND AVERAGE RAINFALL.

EROSION CONTROL BLANKET ANCHORAGE

NOT TO SCALE

PRELIMINARY - NOT FOR CONSTRUCTION

NO.	BY	CK	APP
A			

REVISIONS AND RECORD OF ISSUE

02/20/15 GMP DRAWINGS

DATE

50.3130 - Civil Drawings

C-30-506.dwg

SAVED: VAN16843, 12/29/2014 11:59:51 AM

PLOTTED:

USER: KOE49353

XREF1:

XREF2:

XREF3:

XREF4:

DWG VER: 1000

BLACK & VEATCH
Building a world of difference.

Black & Veatch Corporation
Virginia Beach, VA

BEDFORD REGIONAL WATER AUTHORITY
SMITH MOUNTAIN LAKE WTP &
RAW WATER PUMPING STATION / INTAKE

CIVIL
EROSION AND SEDIMENTATION CONTROL
DETAILS

DESIGNED: ADE
DETAILED: VVV
CHECKED:
APPROVED:
DATE: DECEMBER 2014

0 1/2 1
IF THIS BAR DOES NOT MEASURE 1" THEN DRAWING IS NOT TO FULL SCALE

PROJECT NO.
182262

C-30-506
SHEET
OF

FD7000
D7000

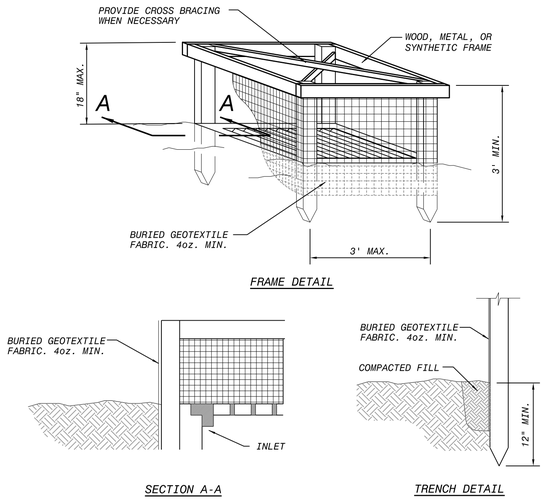

SILT FENCE INLET PROTECTION

NOT TO SCALE

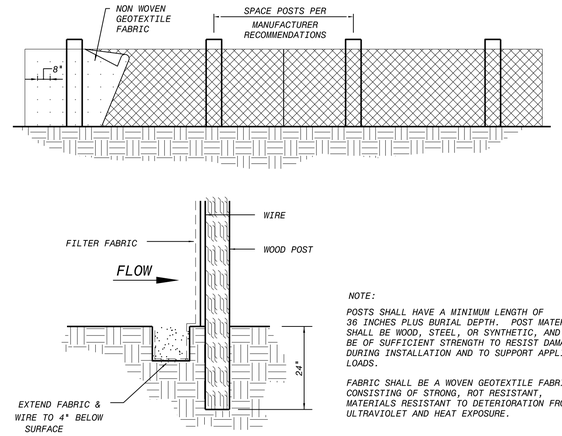

NOTE:

POSTS SHALL HAVE A MINIMUM LENGTH OF 36 INCHES PLUS BURIAL DEPTH. POST MATERIAL SHALL BE WOOD, STEEL, OR SYNTHETIC, AND SHALL BE OF SUFFICIENT STRENGTH TO RESIST DAMAGE DURING INSTALLATION AND TO SUPPORT APPLIED LOADS.

FABRIC SHALL BE A WOVEN GEOTEXTILE FABRIC CONSISTING OF STRONG, ROT RESISTANT, MATERIALS RESISTANT TO DETERIORATION FROM ULTRAVIOLET AND HEAT EXPOSURE.

SILT FENCE CONSTRUCTION

NOT TO SCALE

EROSION AND SEDIMENT CONTROL CONSTRUCTION SEQUENCE

1. CLEAR AREAS FOR CONSTRUCTION ENTRANCE, AND SILT FENCE
2. INSTALL CONSTRUCTION ENTRANCES AND PERIMETER CONTROLS
3. INSTALL INLET PROTECTION MEASURES ON EXISTING INLETS
4. CONTINUE SITE CLEARING
5. BEGIN MASS EARTHWORK OPERATION
6. INSTALL STAGING AREAS, MATERIAL STORAGE AREAS, AND FUELING STATIONS
7. CONTINUE SITE EXCAVATING, BACKFILLING, AND GRADING ACTIVITIES
8. INSTALL EROSION CONTROL BLANKET AS INDICATED ON PLANS
9. ESTABLISH BUILDING PAD
10. TEMPORARY SEED DISTURBED AREAS IF TO BE UNDISTURBED FOR MORE THAN 15 DAYS
11. BEGIN TRENCHING FOR STORM SEWERS, SANITARY SEWERS, WATER LINES, AND OTHER UTILITIES
12. INSTALL INLET PROTECTION MEASURES
13. STONE PARKING LOTS OR TEMPORARY SEED
14. CONSTRUCT BUILDING
15. INSTALL PARKING LOT CURBS, TEMPORARY SEED PERIMETER OF SITE
16. COMPLETE CONCRETE/ASPHALT PAVING
17. FINAL GRADE AND SEED

EROSION CONTROL NOTES

1. CONTRACTOR SHALL COMPLY WITH ALL STATE AND LOCAL ORDINANCES THAT APPLY.
2. THE EROSION CONTROL PLANS SHALL NOT BE CONSIDERED ALL INCLUSIVE AS THE CONTRACTOR SHALL TAKE ALL NECESSARY PRECAUTIONS TO PREVENT SEDIMENT FROM LEAVING THE SITE.
3. ADDITIONAL EROSION AND SEDIMENT CONTROL MEASURES SHALL BE INSTALLED IF DEEMED NECESSARY BY ON SITE INSPECTION BY THE LOCAL REVIEWING AUTHORITY.
4. WASTES AND UNUSED BUILDING MATERIALS SHALL NOT BE ALLOWED TO BE CARRIED FROM THE SITE BY STORM WATER RUNOFF. PROPER DISPOSAL OF ALL WASTES AND UNUSED BUILDING MATERIALS IS REQUIRED.
5. SEDIMENT BEING TRACKED ONTO PUBLIC OR PRIVATE ROADWAYS SHALL BE MINIMIZED. CLEARED SEDIMENT SHALL BE RETURNED TO THE SITE FOR DISPOSAL.
6. EXISTING VEGETATION SHALL BE PRESERVED IN AREAS NOT DISTURBED BY CONSTRUCTION ACTIVITY.
7. ANY OFF-SITE BORROW OR DISPOSAL SHOULD BE DONE IN AN APPROVED MANNER IN ACCORDANCE WITH 327 IAC 15-5 (RULE 5). OFF-SITE BORROW OR DISPOSAL AREAS MAY REQUIRE A SEPARATE RULE 5 PERMIT.
8. IF SOIL STOCKPILES WILL BE LEFT FOR A PERIOD LONGER THAN FIFTEEN (15) DAYS, THEY SHALL BE STABILIZED WITH TEMPORARY SEED MIX AND SURROUNDED BY SILT FENCE.
9. ALL APPLICABLE EROSION CONTROL MEASURES SHALL BE PLACED BEFORE ANY LAND DISTURBING ACTIVITIES.
10. UNVEGETATED AREAS THAT ARE SCHEDULED OR LIKELY TO BE LEFT INACTIVE FOR FIFTEEN (15) DAYS OR MORE MUST BE TEMPORARILY OR PERMANENTLY SEEDED. ALTERNATIVE STABILIZATION METHODS ARE ACCEPTABLE IF THEY ARE ADEQUATE TO PREVENT SEDIMENT DISCHARGE.
11. ANY DEWATERING ACTIVITIES SHALL BE PERFORMED IN A MANNER THAT WILL NOT DISCHARGE SEDIMENT LADEN WATER INTO THE STREAM. SEDIMENT LADEN WATER SHALL BE FILTERED THROUGH A PUMP DISCHARGE FILTER DEVICE SUCH AS A PUMP DISCHARGE BAG. PUMP DISCHARGE SHALL BE PLACED IN AN AREA THAT WILL NOT CAUSE EROSION AT THE OUTLET.
12. IT WILL BE THE RESPONSIBILITY OF THE CONTRACTOR TO ENSURE THAT ALL APPLICABLE EROSION AND SEDIMENT CONTROL MEASURES ARE IN PLACE AT THE APPROPRIATE PHASES OF CONSTRUCTION.
13. IF CONTRACTOR WORKS OUTSIDE THE ESTABLISHED CONSTRUCTION LIMITS, SILT FENCE MAY BE REQUIRED. CONTRACTOR IS RESPONSIBLE FOR ANY WORK OUTSIDE THE CONSTRUCTION LIMITS AT NO COST TO THE OWNER.
14. WITHIN FORTY EIGHT (48) HOURS OF THE INITIATION OF CONSTRUCTION ACTIVITY, THE CONTRACTOR MUST NOTIFY IDEMS'S RULE 5 COORDINATOR (317) 233-1864 AND THE LOCAL STORM WATER AUTHORITY OF THE ACTUAL PROJECT START DATE.
15. THE CONTRACTOR SHALL POST A NOTICE NEAR THE MAIN ENTRANCE OF THE PROJECT SITE. THE NOTICE SHALL INCLUDE A COPY OF THE COMPLETED NOI, LOCAL CONTACT INFORMATION, AND LOCATION OF THE CONSTRUCTION PLANS.
16. THE CONTRACTOR SHALL DEVELOP A SELF-MONITORING PROGRAM TO ENSURE PROPER MAINTENANCE AND FUNCTION OF STORM WATER QUALITY MEASURES. A WRITTEN EVALUATION SHOULD BE PERFORMED BY THE END OF THE NEXT BUSINESS DAY AFTER EACH MEASURABLE STORM EVENT, AND AT A MINIMUM OF ONE (1) TIME PER WEEK. WRITTEN EVALUATION SHALL INCLUDE THE NAME OF THE INDIVIDUAL PERFORMING THE EVALUATION, DATE OF THE EVALUATION, PROBLEMS IDENTIFIED AT THE SITE, AND DETAILS OF CORRECTIVE ACTIONS RECOMMENDED AND COMPLETED. MONITORING SHOULD BE PERFORMED BY AN INDIVIDUAL TRAINED IN EROSION AND SEDIMENT CONTROL PRACTICES.
17. ALL CONCRETE TRUCKS USED ON-SITE SHALL BE DIRECTED TO THE CONCRETE WASHOUT BASIN. THE CONCRETE WASHOUT BASIN SHALL BE PLACED AT LEAST FIFTY FEET FROM ANY INLET STRUCTURE OR SURFACE WATER. WASHOUT BASIN SHOULD BE ADEQUATELY SIZED TO PREVENT OVERFLOW OF WASHOUT WATER. WASHOUT BASIN SHOULD BE CLEARLY MARKED AND USED ONLY FOR CONCRETE WASHOUT.

INLET PROTECTION MAINTENANCE REQUIREMENTS

1. INSPECT FREQUENTLY FOR DAMAGE BY VEHICULAR TRAFFIC AND REPAIR IF NEEDED.
2. INSPECT AFTER EACH STORM EVENT.
3. REMOVE SEDIMENT WHEN IT REACHES HALF THE HEIGHT OF THE BARRIER.
4. DEPOSIT SEDIMENT WHERE IT WILL NOT ENTER STORM DRAIN.

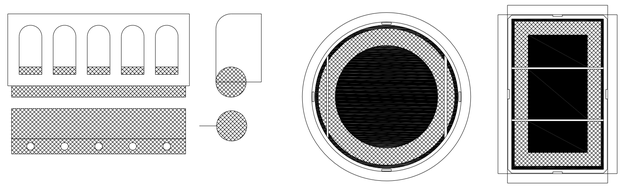

DANDY SACK ™

DANDY CURB SACK ™

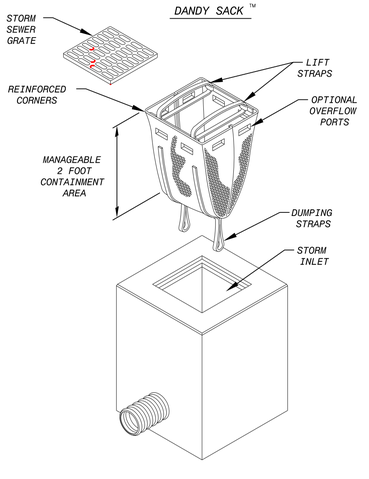

DETAIL OF INLET SEDIMENT CONTROL DEVICE

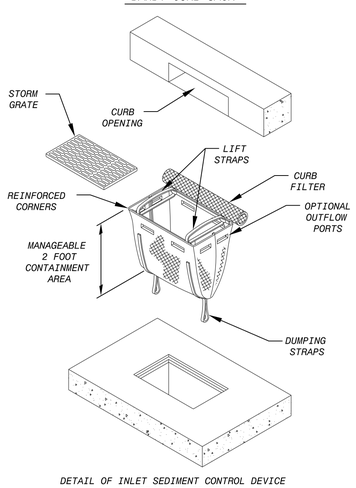

DETAIL OF INLET SEDIMENT CONTROL DEVICE WITH CURB FILTER

DROP-IN INLET PROTECTION

NOT TO SCALE

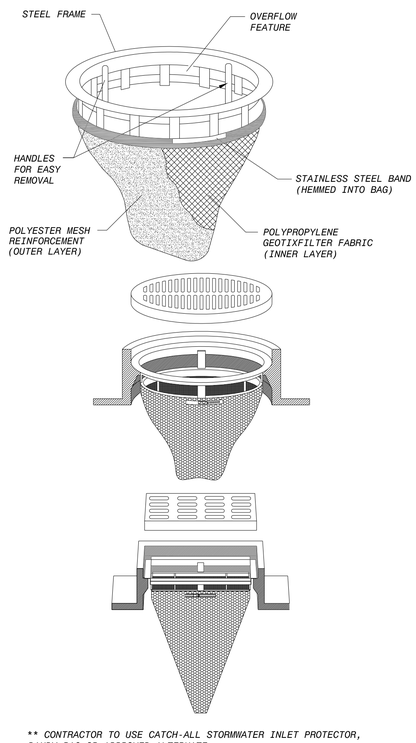

** CONTRACTOR TO USE CATCH-ALL STORMWATER INLET PROTECTOR, DANDY BAG OR APPROVED ALTERNATE.

SEASONAL SOIL PROTECTION CHART

STABILIZATION PRACTICE	JAN.	FEB.	MAR.	APR.	MAY	JUNE	JULY	AUG.	SEPT.	OCT.	NOV.	DEC.
PERMANENT SEEDING			A		*	/////I	////*		*I			
DORMANT SEEDING	B									B		
TEMPORARY SEEDING			C	E		*////I	////*	D				

A = KENTUCKY BLUEGRASS 100 LBS./ACRE; CREEPING RED FESCUE 100 LBS./ACRE; HYDROSEEDED
B = KENTUCKY BLUEGRASS 120 LBS./ACRE; CREEPING RED FESCUE 120 LBS./ACRE; HYDROSEEDED
C = SPRING OATS 3 BUSHELS/ACRE
D = WHEAT OR RYE 2 BUSHELS/ACRE
E = ANNUAL RYE GRASS 40 LBS./ACRE (1 LB/1000 SQ. FT.)
/I/ = IRRIGATION NEEDED DURING JUNE, JULY, AUGUST AND/OR SEPTEMBER

SEEDING NOTES

1. ALL AREAS WITHIN THE CONSTRUCTION LIMITS SHALL BE SEEDED AS SOON AS POSSIBLE FOLLOWING EXCAVATION AND GRADING WORK. ANY AREA THAT WILL BE LEFT IDLE FOR 14 CALENDAR DAYS SHALL BE TEMPORARY SEEDED AND MULCHED. SEEDED AREAS SHOULD BE INSPECTED ON A WEEKLY BASIS TO DETERMINE IF RE-SEEDING IS NEEDED.

2. MULCH SHALL BE USED WITH ALL BROADCAST SEEDING OPERATIONS. MULCH SHALL BE ANCHORED TO THE GROUND SURFACE BY CRIMPING OR OTHER ACCEPTABLE METHODS.

3. FERTILIZER SHALL BE APPLIED AT A RATE ADEQUATE TO PROVIDE 1 LB. OF ACTUAL NITROGEN PER 1000 SQUARE FEET.

4. LIME SHOULD BE ADDED TO TOPSOIL TO OBTAIN A PH RANGE OF 6.0 TO 7.0. LIME SHALL BE ASTM C 602, CLASS T, AGRICULTURAL LIMESTONE CONTAINING A MINIMUM OF 80 PERCENT CALCIUM CARBONATE EQUIVALENT, WITH A MINIMUM 99 PERCENT PASSING A NO. 8 (2.36mm) SIEVE AND A MINIMUM OF 75 PERCENT PASSING A NO. 50 (250 micrometer) SIEVE.

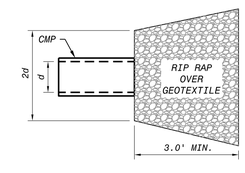

OUTLET PROTECTION

NOT TO SCALE

OUTLET PROTECTION MAINTENANCE REQUIREMENTS

1. INSPECT RIP RAP OUTLET PROTECTION AFTER STORM EVENTS FOR STONE DISPLACEMENT AND FOR EROSION AT THE SIDES AND ENDS OF THE APRON.

2. MAKE NEEDED REPAIRS IMMEDIATELY, USE APPROPRIATE SIZE STONE, AND DO NOT PLACE ABOVE THE FINISHED GRADE

PRELIMINARY - NOT FOR CONSTRUCTION

NO.	BY	CK	APP
A			

REVISIONS AND RECORD OF ISSUE

DATE: 02/20/15 GMP DRAWINGS

50.3130 - Civil Drawings

C-30-507.dwg

SAVED: VAN16843, 12/29/2014 12:00:47 PM

PLOTTED:

USER: KOE49353

DWG VER: 1000

XREF1:

XREF2:

XREF3:

XREF4:

BLACK & VEATCH
Building a world of difference.
Black & Veatch Corporation
Virginia Beach, VA

BEDFORD REGIONAL WATER AUTHORITY
SMITH MOUNTAIN LAKE WTP &
RAW WATER PUMPING STATION / INTAKE

CIVIL
EROSION AND SEDIMENTATION CONTROL
DETAILS

DESIGNED: ADE
DETAILED: VVV
CHECKED:
APPROVED:
DATE: DECEMBER 2014

0 1/2 1
IF THIS BAR DOES NOT MEASURE 1" THEN DRAWING IS NOT TO FULL SCALE

PROJECT NO.
182262

C-30-507
SHEET
OF

FD7000
D7000

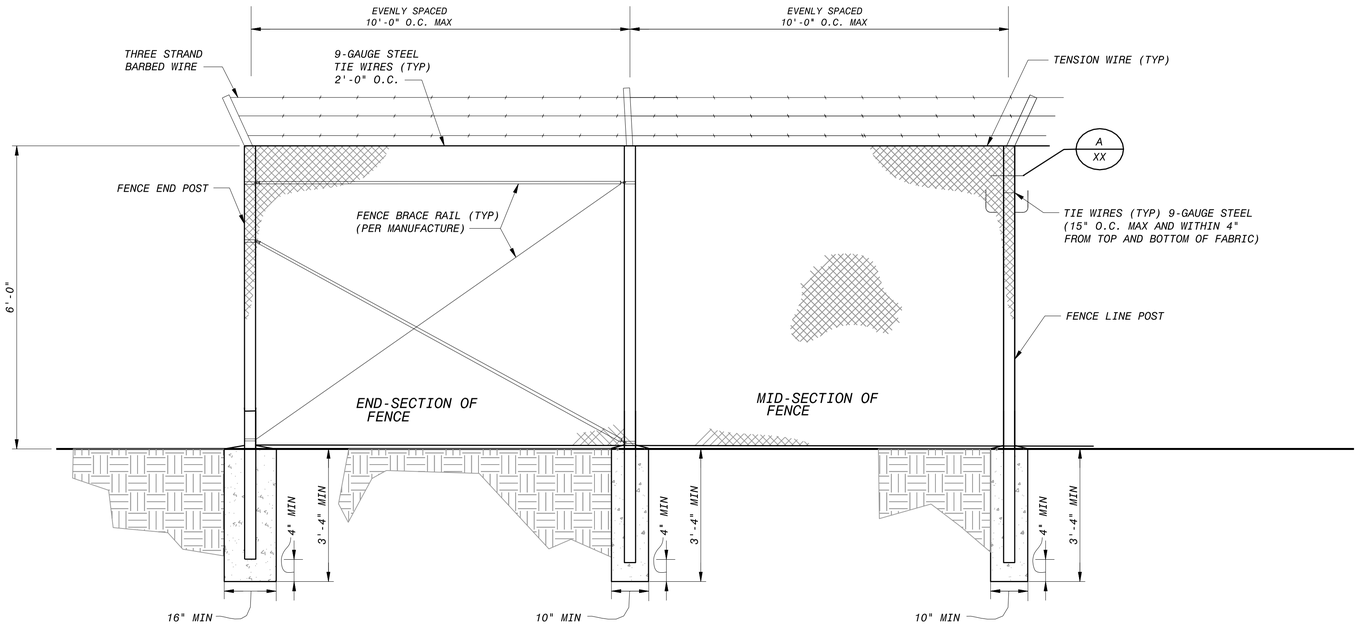

1 / XX — CHAIN LINK FENCE SECTION AND END POST DETAIL

N.T.S.

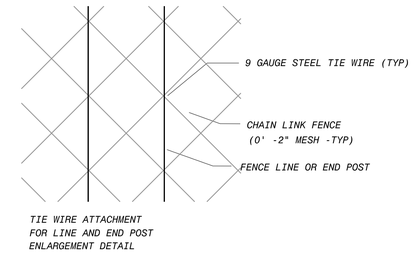

A / XX — CHAIN LINK MESH ENLARGEMENT

N.T.S.

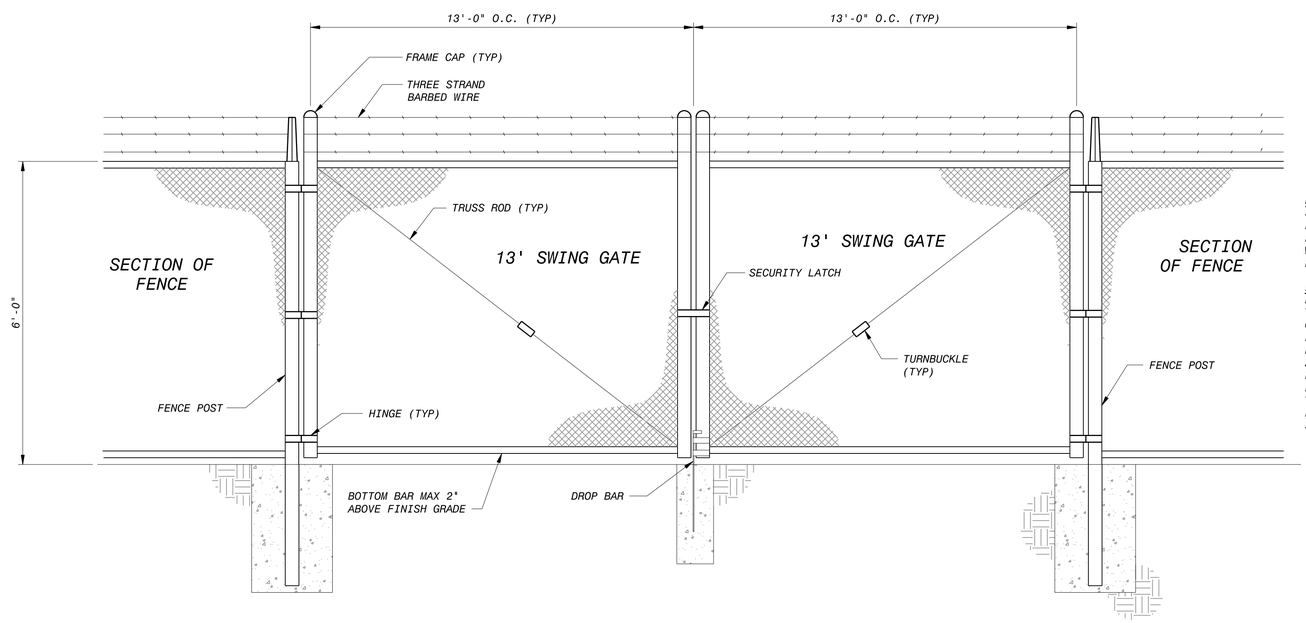

DESCRIPTION:
SWING GATE CHAIN LINK FENCE FABRIC IS MADE FROM 9-GAUGE STEEL WIRE WOVEN IN A 2" DIAMOND MESH.

INSTALLATION:
MOUNTED POST HOLE DIGGER TO SET THE POSTS IN CONCRETE FOOTINGS, EVENLY SPACED, OR AT A MAXIMUM OF 10'-0" O.C. ATTACH THE TENSION WIRE RAILS AND BRACING HARDWARE TO POST. ATTACH THE FABRIC TO THE FRAMEWORK WITH 9-GAUGE STEEL WIRE TIES 12" O.C.

2 / XX — DOUBLE INDUSTRIAL SWING GATE DETAIL

N.T.S.

FENCE AND GATE PLAN NOTES

1. REFER TO SPECIFICATIONS
2. REFER TO SHEETS C-30-101 AND C-30-103.

PRELIMINARY - NOT FOR CONSTRUCTION

NO.	BY	CK	APP
A			

DATE	REVISIONS AND RECORD OF ISSUE
02/20/15	GMP DRAWINGS

50.3130 - Civil Drawings
C-30-508.dwg
SAVED: VAN16843, 12/29/2014 11:42:52 AM
PLOTTED:
USER: KOE49353
DWG VER: 1000
XREF1:
XREF2:
XREF3:
XREF4:

BLACK & VEATCH
Building a world of difference.
Black & Veatch Corporation
Virginia Beach, VA

BEDFORD REGIONAL WATER AUTHORITY
SMITH MOUNTAIN LAKE WTP &
RAW WATER PUMPING STATION / INTAKE

CIVIL
DETAILS

DESIGNED: ADE
DETAILED: VVV
CHECKED:
APPROVED:
DATE: DECEMBER 2014

0 1/2 1
IF THIS BAR DOES NOT MEASURE 1" THEN DRAWING IS NOT TO FULL SCALE

PROJECT NO.
182262

C-30-508
SHEET
OF

FD7000
D7000

NOTES:
1. EACH TREE IS BE PLANTED WITH THE ROOT FLARE AT OR ABOVE GRADE. REMOVE ANY SOIL THAT COVERS THE TOP OF THE ROOT FLARE. IN WET AND COMPACTED AREAS, POSITION THE FLARE 1"–2" ABOVE GRADE.
2. REMOVE METAL AND PLASTIC CONTAINERS COMPLETELY.
3. FOR PLANTS WITH WIRE BASKETS, REMOVE AND CUT WIRE BASKET AROUND THE ROOT BALL. BEFORE TREE IS IN PIT, REMOVE BOTTOM OF BASKET. REMOVE VERTICAL WIRE, SECTIONS AFTER TREE IS IN PIT. REMOVE TWINE, ROPE, AND BURLAP FROM TOP OF BALL.
4. REMOVE TAGS AND LABELS.
5. WATER THOROUGHLY TO ELIMINATE AIR POCKETS

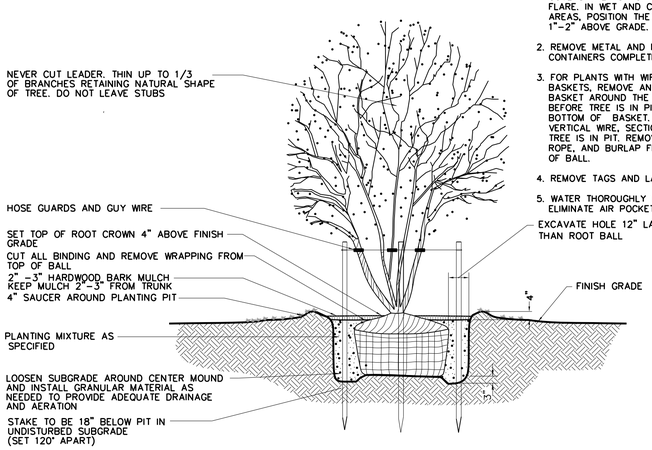

MULTI–STEM TREE PLANTING DETAIL
NOT TO SCALE

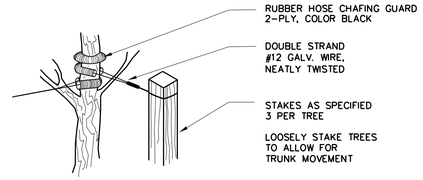

STAKING DETAIL

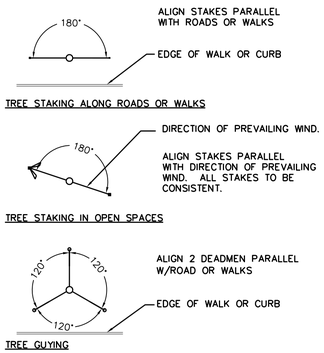

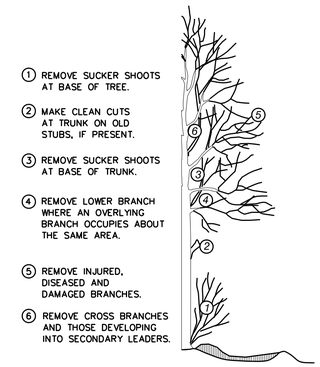

TREE PRUNING DETAIL
NOT TO SCALE

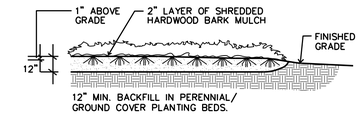

PERENNIAL/GROUND COVER PLANTING DETAIL
NOT TO SCALE

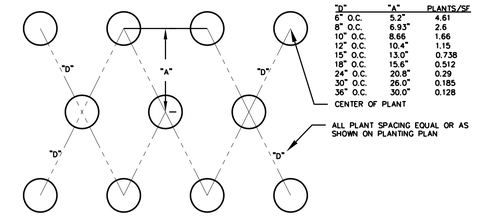

"D"	"A"	PLANTS/SF
6" O.C.	5.2"	4.61
8" O.C.	6.93"	2.6
10" O.C.	8.66	1.66
12" O.C.	10.4"	1.15
15" O.C.	13.0"	0.738
18" O.C.	15.6"	0.512
24" O.C.	20.8"	0.29
30" O.C.	26.0"	0.185
36" O.C.	30.0"	0.128

GROUND COVER SPACING DETAIL
NOT TO SCALE

NOTES:
1. EACH TREE IS BE PLANTED WITH THE ROOT FLARE AT OR ABOVE GRADE. REMOVE ANY SOIL THAT COVERS THE TOP OF THE ROOT FLARE. IN WET AND COMPACTED AREAS, POSITION THE FLARE 1"–2" ABOVE GRADE.
2. REMOVE METAL AND PLASTIC CONTAINERS COMPLETELY.
3. FOR PLANTS WITH WIRE BASKETS, REMOVE AND CUT WIRE BASKET AROUND THE ROOT BALL. BEFORE TREE IS IN PIT, REMOVE BOTTOM OF BASKET. REMOVE VERTICAL WIRE, SECTIONS AFTER TREE IS IN PIT. REMOVE TWINE, ROPE, AND BURLAP FROM TOP OF BALL.
4. REMOVE TAGS AND LABELS.
5. WATER THOROUGHLY TO ELIMINATE AIR POCKETS

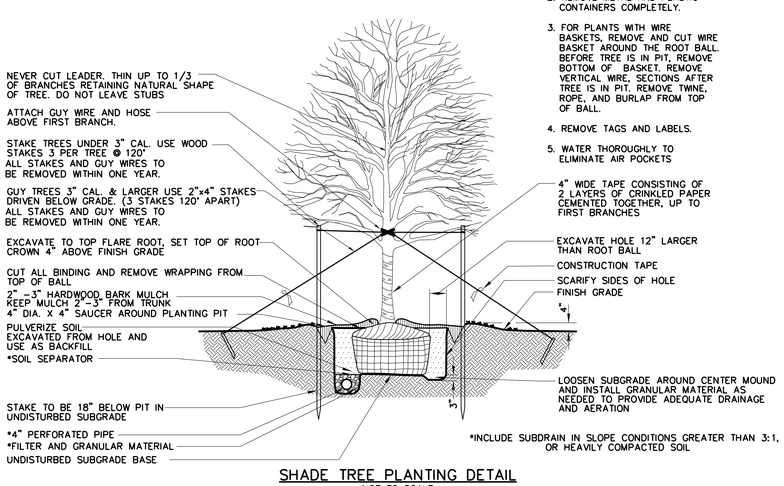

SHADE TREE PLANTING DETAIL
NOT TO SCALE

NOTES:
1. EACH TREE IS BE PLANTED WITH THE ROOT FLARE AT OR ABOVE GRADE. REMOVE ANY SOIL THAT COVERS THE TOP OF THE ROOT FLARE. IN WET AND COMPACTED AREAS, POSITION THE FLARE 1"–2" ABOVE GRADE.
2. REMOVE METAL AND PLASTIC CONTAINERS COMPLETELY.
3. FOR PLANTS WITH WIRE BASKETS, REMOVE AND CUT WIRE BASKET AROUND THE ROOT BALL. BEFORE TREE IS IN PIT, REMOVE BOTTOM OF BASKET. REMOVE VERTICAL WIRE, SECTIONS AFTER TREE IS IN PIT. REMOVE TWINE, ROPE, AND BURLAP FROM TOP OF BALL.
4. REMOVE TAGS AND LABELS.
5. WATER THOROUGHLY TO ELIMINATE AIR POCKETS

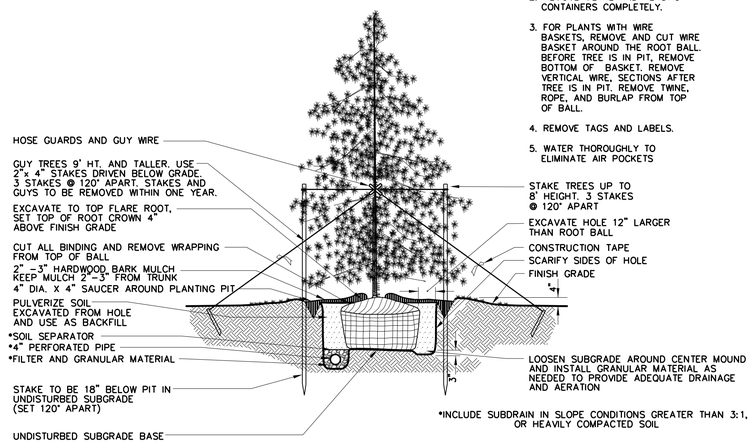

EVERGREEN TREE PLANTING DETAIL
NOT TO SCALE

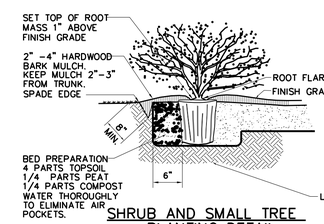

NOTES:
1. EACH SHRUB IS BE PLANTED WITH THE ROOT FLARE AT OR ABOVE GRADE. REMOVE ANY SOIL THAT COVERS THE TOP OF THE ROOT FLARE. IN WET AND COMPACTED AREAS, POSITION THE FLARE 1"–2" ABOVE GRADE.
2. REMOVE TWINE, ROPE, AND BURLAP FROM TOP OF BALL.
3. REMOVE METAL AND PLASTIC CONTAINERS COMPLETELY.
4. REMOVE TAGS AND LABELS.

SHRUB AND SMALL TREE PLANTING DETAIL
NOT TO SCALE

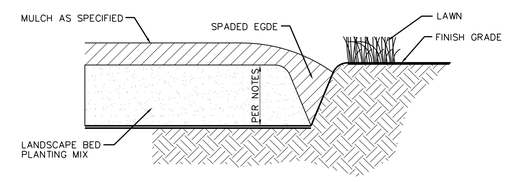

SPADED EDGE DETAIL
NOT TO SCALE

PRELIMINARY - NOT FOR CONSTRUCTION

DATE	REVISIONS AND RECORD OF ISSUE	NO.	BY	CK	APP
02/20/15	GMP DRAWINGS	A			

50.3130 - Civil Drawings
C-30-509.dwg
SAVED: VAN16843, 12/29/2014 11:48:51 AM
PLOTTED:
USER: ADE49353
XREF1:
XREF2:
XREF3:
XREF4:
DWG VER: 1000

BLACK & VEATCH
Building a world of difference.
Black & Veatch Corporation
Virginia Beach, VA

BEDFORD REGIONAL WATER AUTHORITY
SMITH MOUNTAIN LAKE WTP &
RAW WATER PUMPING STATION / INTAKE

CIVIL DETAILS

DESIGNED: ADE
DETAILED: VVV
CHECKED:
APPROVED:
DATE: DECEMBER 2014

0 1/2 1
IF THIS BAR DOES NOT MEASURE 1" THEN DRAWING IS NOT TO FULL SCALE

PROJECT NO.
182262

C-30-509
SHEET
OF

FD7000
D7000

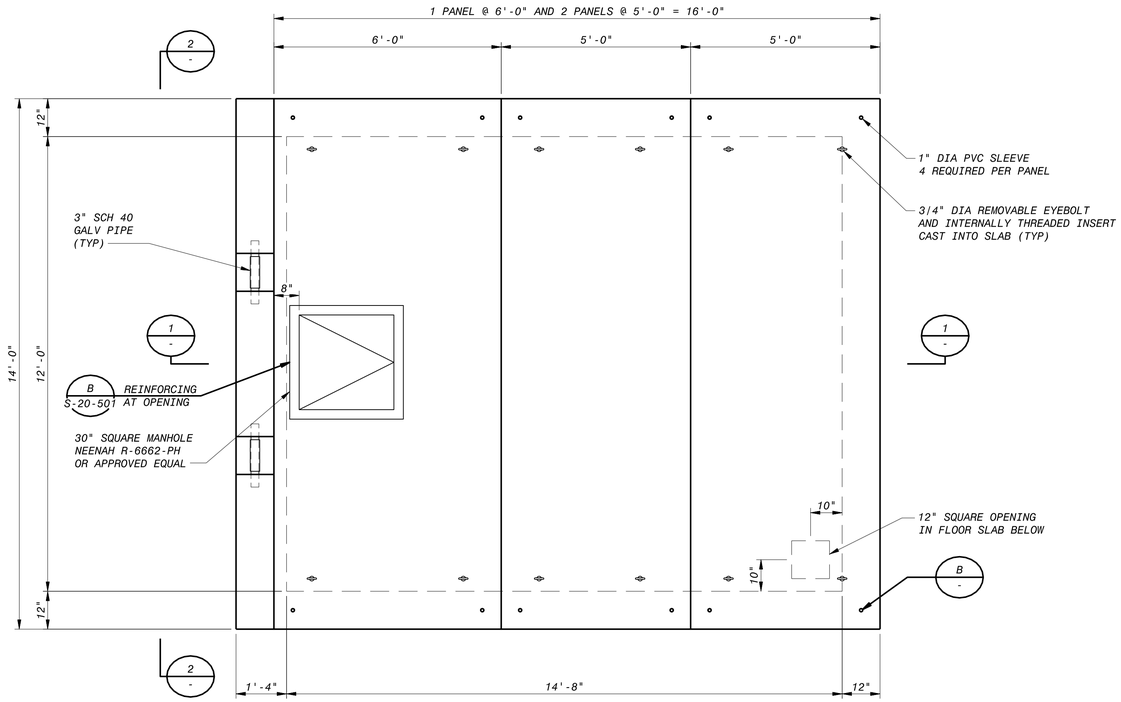

RAW WATER INTAKE
PUMP STATION VAULT (A)
1/2" = 1'-0"

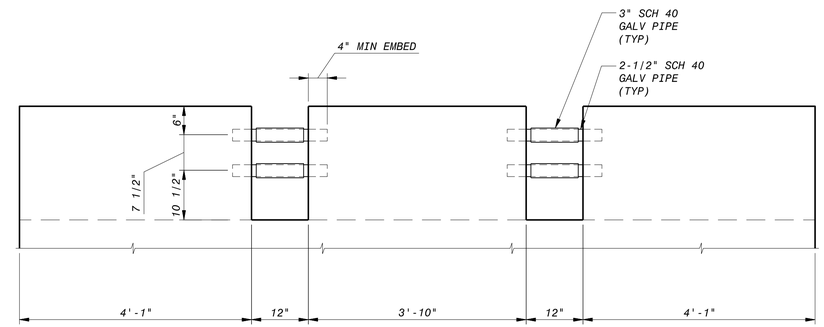

SECTION (2)
1/2" = 1'-0"

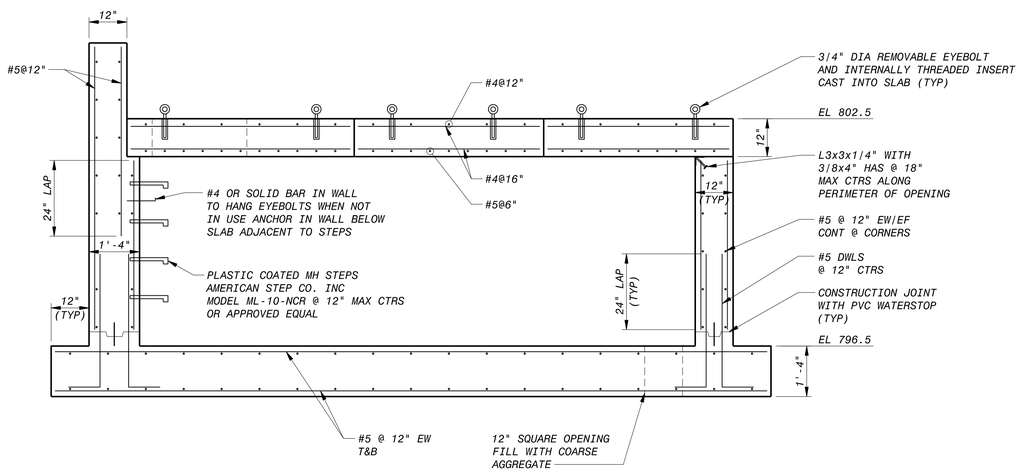

SECTION (1)
1/2" = 1'-0"

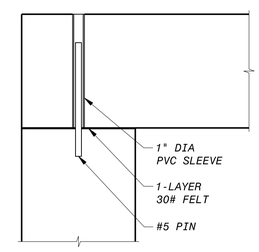

DETAIL (B)
NO SCALE

12" 6" 0 1' 2' 3'
3/4"=1'-0"

12" 6" 0 1' 2' 3' 4' 5'
1/2"=1'-0"

PRELIMINARY - NOT FOR CONSTRUCTION

NO.	BY	CK	APP
A			

02/20/15 GMP DRAWINGS
DATE REVISIONS AND RECORD OF ISSUE

50.3100 - Structural Drawings
S-20-101.dwg

XREF1:
XREF2:
XREF3:
XREF4:

SAVED:KOE49353, 2/27/2015 9:30:43 AM
PLOTTED:
USER:KOE49353 DWG VER:1000

BLACK & VEATCH
Building a world of difference.
Black & Veatch Corporation
Virginia Beach, VA

BEDFORD REGIONAL WATER AUTHORITY
SMITH MOUNTAIN LAKE WTP &
RAW WATER PUMPING STATION / INTAKE

STRUCTURAL
RAW WATER INTAKE PUMP STATION VAULT
PLAN, SECTIONS AND DETAIL

DESIGNED:
DETAILED:
CHECKED:
APPROVED:
DATE:

0 1/2 1
IF THIS BAR DOES NOT MEASURE 1" THEN DRAWING IS NOT TO FULL SCALE

PROJECT NO.
182262

S-20-101
SHEET
OF

FD7000
D7000

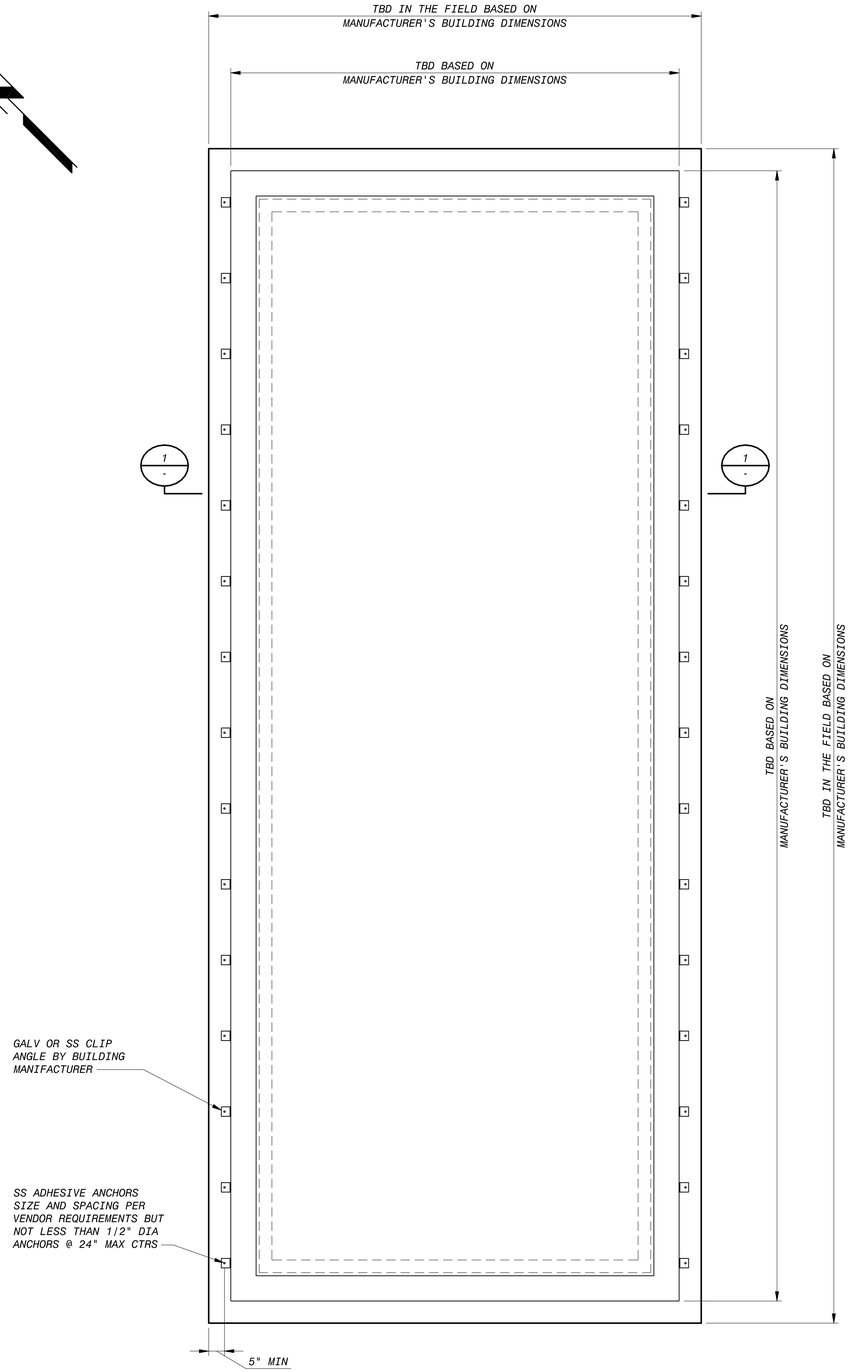

ELECTRICAL BUILDING SLAB (A)
1/2" = 1'-0"

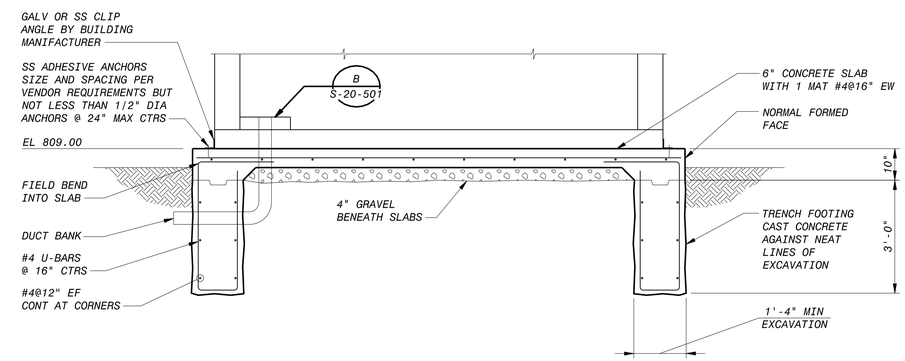

SECTION (1 / -)
1/2" = 1'-0"

12" 6" 0 1' 2' 3' 4' 5'
1/2"=1'-0"

PRELIMINARY - NOT FOR CONSTRUCTION

DATE	REVISIONS AND RECORD OF ISSUE	NO.	BY	CK	APP
02/20/15	GMP DRAWINGS	A			

50.3100 - Structural Drawings
S-20-102.dwg
XREF1:
XREF2:
XREF3:
XREF4:
SAVED:KOE49353, 2/27/2015 9:10:43 AM
PLOTTED:
USER:KOE49353
DWG VER-1000

BLACK & VEATCH
Building a world of difference.
Black & Veatch Corporation
Virginia Beach, VA

BEDFORD REGIONAL WATER AUTHORITY
SMITH MOUNTAIN LAKE WTP &
RAW WATER PUMPING STATION / INTAKE

STRUCTURAL
ELECTRICAL BUILDING
PLAN AND SECTION

DESIGNED:
DETAILED:
CHECKED:
APPROVED:
DATE:

0 1/2 1
IF THIS BAR DOES NOT MEASURE 1" THEN DRAWING IS NOT TO FULL SCALE

PROJECT NO.
182262

S-20-102
SHEET
OF

FD7000
D7000

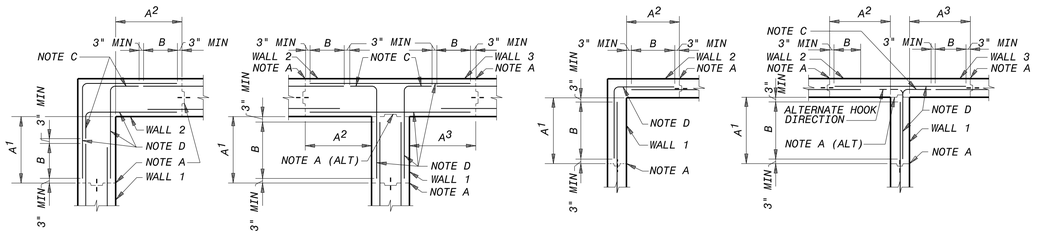

A = VERTICAL CONSTRUCTION JOINT NEAREST TO WALL CORNER.

A (ALT) = ALTERNATE VERTICAL CONSTRUCTION JOINT NEAREST TO WALL CORNER IN T WALL JOINT WHICH DOES NOT REQUIRE WATERSTOP.

A^X = DISTANCE FROM INSIDE CORNER FACE TO NEAREST VERTICAL CONSTRUCTION JOINT IN SIMILARLY NUMBERED WALL. A^X SHALL NOT BE LESS THAN DIMENSIONS INDICATED BY THESE DETAILS; NOR GREATER THAN INDICATED ON PLAN DRAWINGS; BUT IN ANY CASE SHALL NOT EXCEED 30 FEET IN LIQUID CONTAINMENT STRUCTURES OR 40 FEET IN OTHER STRUCTURES. IN T WALL JOINTS WHICH DO NOT REQUIRE WATERSTOP, A1 MAY BE ZERO.

B = OPTIONAL SPLICE LOCATION UNLESS SPECIFICALLY NOTED ON PLAN DRAWINGS. SPLICE LENGTH SHALL NOT BE LESS THAN THAT REQUIRED FOR TOP BARS AS SHOWN IN TABLE ON THIS SHEET. USE SPLICE LENGTH FOR THE SMALLER OF THE TWO BARS BEING SPLICED.

C = STANDARD HOOK

D = TYPICAL CORNER REINFORCEMENT. SIZE SHALL MATCH LARGEST ADJACENT WALL HORIZONTAL REINFORCEMENT; SPACING SHALL MATCH MINIMUM ADJACENT WALL HORIZONTAL REINFORCEMENT SPACING.

MAIN REINFORCEMENT FOR ALL STRUCTURES

TYPICAL HORIZONTAL CORNER REINFORCING DETAILS

NOTES:
1. VERTICAL REINFORCING NOT SHOWN.
2. THESE DETAILS SHALL BE APPLICABLE TO ALL WALL CORNERS UNLESS NOTED OTHERWISE ON THE DRAWINGS.

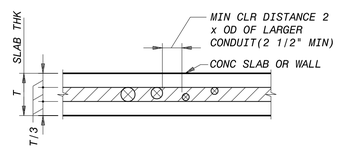

NOTES:
1. PLACE CONDUIT ONLY IN SHADED AREA.
2. FOR CONDUIT REQUIREMENTS SEE THE ELECTRICAL DRAWINGS AND SPECIFICATIONS.

CONDUIT PLACING DETAIL

NO SCALE

NOTES

1. DETAILS ON THIS DRAWING APPLY TO ALL DRAWINGS UNLESS OTHERWISE NOTED.
2. WORK THIS DRAWING WITH THE STANDARD CONCRETE JOINT DETAILS.

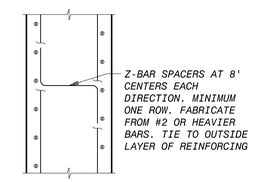

SPACERS FOR WALL REINFORCEMENT

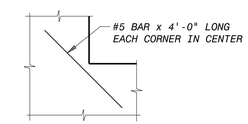

TYPICAL EXTRA REINFORCING AT ISOLATED RE-ENTRANT CORNERS

(TYPICAL REQUIRED UNLESS ADDITIONAL REINFORCEMENT SPECIFICALLY INDICATED AT OPENINGS ON DRAWINGS)

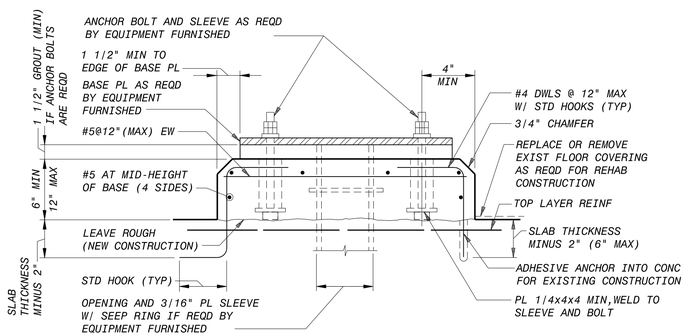

NOTE:
WILSON ANCHOR SLEEVES MAY BE SUBSTITUTED FOR STEEL PIPE SLEEVES

EQUIPMENT DETAIL (A)

NO SCALE

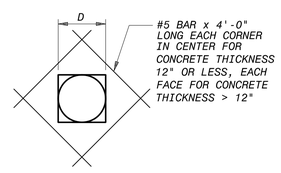

FOR OPENINGS
12" <= D <= 21"

REINFORCING AT OPENINGS 12" TO <= 54" (B)

(TYPICAL REQUIRED UNLESS ADDITIONAL REINFORCEMENT SPECIFICALLY INDICATED AT OPENINGS ON DRAWINGS)

LENGTH OF LAPPED SPLICES FOR REINFORCEMENT (INCHES)

(UNLESS NOTED OTHERWISE ON THE DRAWINGS)

(f'c=4000 PSI)

BAR SIZE	BEAMS & COLUMNS		WALLS & SLABS		BAR SIZE
	*TOP BARS	OTHERS	*TOP BARS	OTHERS	
3	16	16	16	16	3
4	19	16	19	16	4
5	24	18	24	18	5
6	33	26	29	22	6
7	55	42	48	37	7
8	69	53	60	46	8
9	84	65	74	57	9
10	103	79	91	70	10
11	122	94	108	83	11

* TOP BARS ARE HORIZONTAL BARS SO PLACED THAT MORE THAN 12" OF CONCRETE IS CAST IN THE MEMBER BELOW THE BAR. HORIZONTAL BARS IN WALLS ARE TO BE PROVIDED WITH LAP LENGTHS AS REQUIRED FOR TOP BARS. VERTICAL BARS MAY BE CONSIDERED AS OTHER BARS

CONCRETE COVER FOR REINFORCEMENT

LOCATION	MINIMUM COVER
UNFORMED SURFACES ADJACENT TO EXCAVATION	3"
SURFACES INSIDE OF OZONE CONTACTORS EXPOSED TO OZONE IN WATER OR AIR	3"
FORMED OR TOP SURFACES EXPOSED TO WEATHER OR SATURATED AIR, SUBMERGED OR IN CONTACT WITH EARTH, INCLUDING STIRRUPS, TIES OR SPIRALS	2"
OTHER LOCATIONS: BARS IN BEAMS OR GIRDERS, INCLUDING STIRRUPS AND COLUMN SPIRALS OR TIES	1 1/2"
SLABS, WALLS AND JOISTS	
#6 AND LARGER	1 1/2"
#5 AND SMALLER	1"

NOTE: TOLERANCES FOR CONCRETE COVER AND THE FABRICATION AND PLACING OF REINFORCEMENT SHALL CONFORM TO ACI 117.

PRELIMINARY - NOT FOR CONSTRUCTION

NO.	BY	CK	APP	REVISIONS AND RECORD OF ISSUE
A				02/20/15 GMP DRAWINGS

50.3100 - Structural Drawings
S-20-501.dwg
SAVED: KOE49353, 2/27/2015 7:40:46 AM
PLOTTED:
USER: KOE49353
XREF1:
XREF2:
XREF3:
XREF4:
DWG VER: 1000

BLACK & VEATCH
Building a world of difference.
Black & Veatch Corporation
Virginia Beach, VA

BEDFORD REGIONAL WATER AUTHORITY
SMITH MOUNTAIN LAKE WTP &
RAW WATER PUMPING STATION / INTAKE

STRUCTURAL DETAILS

DESIGNED: ADE
DETAILED: VVV
CHECKED:
APPROVED:
DATE: DECEMBER 2014

0 1/2 1
IF THIS BAR DOES NOT MEASURE 1" THEN DRAWING IS NOT TO FULL SCALE

PROJECT NO.
182262

S-20-501
SHEET
OF

FD7000
D7000

GENERAL NOTES:

1. DO NOT CHANGE THE SIZE OR SPACING OF STRUCTURAL ELEMENTS WITHOUT THE APPROVAL OF THE ENGINEER.
2. DETAILS SHOWN ARE TYPICAL AND APPLY TO SIMILAR CONDITIONS UNLESS NOTED OTHERWISE.
3. THESE DRAWINGS DO NOT INCLUDE NECESSARY COMPONENTS FOR CONSTRUCTION SAFETY.
4. BRACE STRUCTURE AS REQUIRED FOR CONSTRUCTION AND WIND LOADS UNTIL ALL STRUCTURAL ELEMENTS NEEDED FOR STABILITY ARE INSTALLED.
5. THE DESIGN IS BASED ON THE 2012 VIRGINIA UNIFORM STATEWIDE BUILDING CODE.
6. CONTRACTOR SHALL DETERMINE EXACT LOCATION OF ALL EXISTING UTILITIES BEFORE COMMENCING WORK. HE/SHE AGREES TO BE FULLY RESPONSIBLE FOR ANY AND ALL DAMAGES WHICH MIGHT BE OCCASIONED BY HIS/HER FAILURE TO LOCATE AND PRESERVE ALL UNDERGROUND UTILITIES.
7. INCORRECTLY FABRICATED, DAMAGED, OR OTHERWISE MISFITTING OR NONCONFORMING MATERIALS OR CONDITIONS SHALL BE REPORTED TO THE OWNER'S REPRESENTATIVE PRIOR TO REMEDIAL OR CORRECTIVE ACTION. ANY SUCH ACTION SHALL REQUIRE PRE-APPROVAL BY THE ENGINEER.
8. EACH CONTRACTOR SHALL COOPERATE WITH THE OWNER'S REPRESENTATIVE AND COORDINATE HIS/HER WORK WITH THE WORK OF OTHERS.
9. VERIFY SIZE AND LOCATION OF OPENINGS PRIOR TO BEGINNING WORK. FOR DIMENSIONS NOT SHOWN, SEE MECHANICAL, ELECTRICAL, CIVIL AND ARCHITECTURAL DRAWINGS.
10. VERIFY SIZE AND LOCATION OF EQUIPMENT PADS WITH MECHANICAL AND/OR ELECTRICAL CONTRACTOR AND EQUIPMENT MANUFACTURER.

FOUNDATION AND SOIL PREPARATION NOTES:

1. THE FOUNDATION DESIGN IS BASED ON AN ALLOWABLE SOIL BEARING PRESSURE OF 2,500 POUNDS PER SQUARE FOOT AS RECOMMENDED IN THE GEOTECHNICAL REPORT NO. 14616028.00 BY SCHNABEL ENGINEERING CONSULTANTS, INC. AND DATED JUNE 11, 2014. BEARING STRATUM FOR FOOTINGS SHALL BE VERIFIED IN FIELD BY THE GEOTECHNICAL ENGINEER BEFORE PLACING CONCRETE FOOTINGS.
2. THE CONTRACTOR SHALL REVIEW THE REPORT AND BORING LOGS DURING THE BIDDING PHASE OF THE PROJECT.
3. BOTTOM OF ALL FOOTINGS SHALL BE A MINIMUM OF 1'-6" BELOW FINAL FINISHED GRADE. ADJUST FOOTING ELEVATIONS AS REQUIRED TO MAINTAIN MINIMUM FROST COVER.
4. PROVIDE POSITIVE DRAINAGE FOR ALL TRENCHES DURING CONSTRUCTION. DO NOT ALLOW ANY PONDING OF WATER DURING CONSTRUCTION.
5. DO NOT PLACE FOOTINGS IN WATER OR ON FROZEN GROUND. DO NOT ALLOW GROUND BENEATH FOOTINGS TO FREEZE.
6. BEAR ALL FOOTINGS ON COMPACTED STRUCTURAL FILL OR NATIVE UNDISTURBED SOIL AS APPROVED BY THE GEOTECHNICAL ENGINEER. SOIL BEARING SURFACES, PREVIOUSLY ACCEPTED BY OWNER'S REPRESENTATIVE, WHICH ARE ALLOWED TO BECOME SATURATED, FROZEN OR DISTURBED SHALL BE REWORKED TO SATISFACTION OF OWNER'S REPRESENTATIVE.
7. STRUCTURAL FILL AND SELECTED FILL: SOUND, DURABLE, SAND, GRAVEL, STONE, OR BLENDS OF THESE MATERIALS, FREE FROM ORGANIC, FROZEN OR OTHER DELETERIOUS MATERIALS, AND MEETING THE FOLLOWING GRADATION REQUIREMENTS:

SIEVE	PERCENT PASSING
4"	100
NO. 40	0 - 70
NO. 200	0 - 10

   1. FINES PASSING NO. 200 SHALL BE NON-PLASTIC.
   2. PARTICLE SIZE ANALYSIS SHALL SHOW NO GAP GRADING.

8. THE SOIL BENEATH THE BUILDING AND 5 FEET AROUND THE PERIMETER SHALL BE TREATED AS FOLLOWS:
   A. STRIP THE AREA OF ALL VEGETATION.
   B. PERFORM ALL CUT OPERATIONS.
   C. THE NEXT 6 INCHES SHALL BE THOROUGHLY SCARIFIED, WITH WATER ADDED TO RAISE THE MOISTURE CONTENT TO AT LEAST 3 PERCENTAGE POINTS ABOVE OPTIMUM, AND RE-COMPACTED TO A DENSITY IN THE RANGE OF 95% TO 100% OF STANDARD PROCTOR. THE FIRST LIFT OF FILL SHALL BE PLACED ON THE COMPACTED SUBGRADE WITHIN EIGHT HOURS OF COMPLETING THE COMPACTION.
   D. THE FILL REQUIRED TO RAISE THE BUILDING TO BENEATH THE FLOOR SLAB SHALL BE EITHER ON SITE FILL OR SELECT (STRUCTURAL) FILL. THE SELECT FILL SHALL HAVE A PLASTICITY INDEX BETWEEN 4 AND 12 AND A LIQUID LIMIT LESS THAN 40. PLACE ALL FILL (ON SITE OR SELECT) IN 8-INCH LIFTS AND COMPACT TO AT LEAST 95% OF THE STANDARD PROCTOR DENSITY AT A MOISTURE CONTENT WITHIN -3 AND +3 PERCENTAGE POINTS OF OPTIMUM.
   E. ALL SLABS-ON-GRADE SHALL BEAR ON A BASE COURSE OF CLEAN, COMPACTED CRUSHED STONE A MINIMUM OF 12" THICK. THE CRUSHED STONE SHALL BE VDOT NO. 57 CRUSHED STONE.
   F. EACH LIFT SHALL BE TESTED FOR MOISTURE CONTENT AND IN PLACE DENSITY AT A RATE OF ONE TEST PER 3,000 SQUARE FEET (MINIMUM OF THREE PER LIFT).
9. SUBMITTALS:
   A. PRIOR TO DELIVERY OR USE OF ANY FILL MATERIAL, THE TESTING LABORATORY SHALL SUBMIT THE FOLLOWING REPORTS OF EACH MATERIAL:
      1. DESCRIPTION OF MATERIAL
      2. GRADATION ANALYSIS
      3. MODIFIED PROCTOR LABORATORY COMPACTION TESTS PER ASTM D1557
   B. FIELD REPORTS OF IN PLACE SOIL DENSITY TESTS CALIBRATED FROM THE MODIFIED PROCTOR LABORATORY COMPACTION TEST

CAST-IN-PLACE CONCRETE NOTES:

1. ALL CONCRETE SHALL HAVE A 28 DAY DESIGN COMPRESSIVE STRENGTH OF 4,500 PSI. 20% OF CLASS F FLYASH MAY BE USED WITH THE APPROVAL OF THE ENGINEER AND THE CONCRETE FINISHER/CONTRACTOR BEFORE BIDDING. CONCRETE SHALL BE AIR ENTRAINED FOR CLASS F2 EXPOSURE PER ACI TABLE 4.4.1. TOLERANCE ON AIR CONTENT AS DELIVERED SHALL BE +/- 1.5 PERCENT.
2. BUILDING CONCRETE SHALL HAVE A MAXIMUM WATER TO CEMENT RATIO AS FOLLOWS:
   A. 4,500 PSI CONCRETE - 0.45
3. PLACEMENT OF CONCRETE SHALL BE IN CONFORMANCE WITH ACI 117-06 "SPECIFICATION FOR TOLERANCE FOR CONCRETE AND MATERIALS AND COMMENTARY".
4. IF THE AIR TEMPERATURE IS GREATER THAN 90 DEGREES WITHIN 24 HOURS AFTER PLACEMENT, HOT WEATHER CONCRETE PROCEDURES SHALL BE USED. THE CONTRACTOR SHALL SUBMIT A PROCEDURE TO THE ENGINEER FOR APPROVAL. THESE PROCEDURES MAY INCLUDE THE FOLLOWING:
   A. PLACING THE CONCRETE IN THE EARLY MORNING HOURS
   B. THE USE OF EVAPORATION REDUCER (SEE BELOW)
   C. THE USE OF MISTING AS A CURING METHOD
   D. THE USE OF WET BLANKETS AS A CURING METHOD
   E. THE USE OF A RETARDING ADMIXTURE (NOT PREFERABLE)
5. FOUR 4"X8" CONCRETE CYLINDERS SHALL BE MADE FOR EVERY 50 CUBIC YARDS OR EACH DAY'S POUR, ONE TO BE TESTED AT 7 DAYS, TWO AT 28 DAYS, AND ONE TO HOLD. THE CONCRETE SLUMP, TEMPERATURE, AND AIR CONTENT SHALL BE MEASURED EVERY TIME A SET OF FOUR CYLINDERS IS MADE.
6. ALL CONCRETE WORK SHALL BE IN ACCORDANCE WITH THE LATEST EDITIONS OF THE AMERICAN CONCRETE INSTITUTE STANDARDS "BUILDING CODE REQUIREMENTS FOR STRUCTURAL CONCRETE" (ACI 318) AND "SPECIFICATIONS FOR STRUCTURAL CONCRETE FOR BUILDINGS" (ACI 301).
7. SPLICES IN REINFORCEMENT SHALL MEET CLASS B TENSION LAP REQUIREMENTS UNLESS NOTED OTHERWISE.
8. COVER FOR ALL REINFORCEMENT SHALL MEET THE COVERAGE REQUIREMENTS AS SHOWN IN THE LATEST ACI 318, OR AS SHOWN ON THE DETAILS. COVER DIMENSIONS SHOWN ON THE DETAILS CONTROL OVER ACI.
9. ANY CONCRETE TO BE PLACED FURTHER THAN 16 FEET FROM THE END OF A CONCRETE TRUCK SHALL BE PUMPED WITH A COMMERCIAL CONCRETE PUMPING TRUCK OR OTHER PLACEMENT METHOD APPROVED BY THE ENGINEER. THE CONCRETE TRUCK SHALL NOT BE ALLOWED TO DRIVE OVER THE SUBGRADE OR THE SLAB REINFORCEMENT.
10. REINFORCING STEEL SHALL BE DOMESTIC DEFORMED BILLET STEEL CONFORMING TO ASTM A-615 GRADE 60. #4 REINFORCEMENT BARS AND SMALLER SHALL BE COLD BENT WHENEVER BENDING IS REQUIRED IN THE FIELD. REINFORCEMENT GREATER THAN A #4 BAR MAY NOT BE BENT IN THE FIELD WITHOUT APPROVAL OF THE ENGINEER.
11. WHERE REQUIRED, STEP NEW FOOTINGS UP OR DOWN IN RATIO OF TWO HORIZONTALS TO ONE VERTICAL. CAST STEPPED FOOTINGS MONOLITHICALLY.
12. DOWEL CONCRETE WALLS AND PIERS INTO FOOTINGS/FOUNDATIONS WITH DOWELS THE SAME SIZE AND SPACING AS VERTICAL REINFORCEMENT. EXTEND DOWELS TO WITHIN 3" OF BOTTOM OF FOOTING/FOUNDATION, TERMINATED WITH ACI STD. 90 DEGREE HOOK, UNLESS NOTED OTHERWISE.
13. PROVIDE A ROUGH CONCRETE SURFACE (1/4" MINIMUM AMPLITUDE) AT THE INTERSECTION OF CONCRETE WALLS, AND PIERS WITH THE TOP OF FOOTINGS. DO NOT PROVIDE A KEYWAY UNLESS SHOWN OR NOTED ON THE DRAWINGS
14. PROVIDE 3/4" x 3/4" CHAMFER AT ALL EXPOSED CORNERS UNLESS NOTED OTHERWISE.
15. NO HOLES OR OPENINGS ARE PERMITTED THROUGH CONCRETE SLABS OR WALLS EXCEPT AS FOLLOWS:
   A. WHERE SHOWN AND AS DETAILED ON DRAWINGS.
   B. MISCELLANEOUS HOLES THROUGH SLABS OR WALLS WHICH DO NOT DISPLACE MORE THAN ONE BAR. THESE DO NOT REQUIRE ADDITIONAL REINFORCEMENT.
16. LOCATE ADDITIONAL CONSTRUCTION JOINTS REQUIRED TO FACILITATE CONSTRUCTION AS ACCEPTABLE TO ENGINEER. DETAIL JOINT AND SHOW ON SHOP DRAWINGS.
17. CAST CONCRETE ON SLOPED SURFACES BEGINNING AT LOWEST ELEVATION AND CONTINUING MONOLITHICALLY TOWARD HIGHER ELEVATIONS UNTIL INTENDED POUR IS COMPLETED.
18. REINFORCING BARS, BAR SUPPORTS, AND SPACERS SHALL BE DETAILED AND PROVIDED IN ACCORDANCE WITH THE LATEST ACI DETAILING MANUAL. USE WIRE-BAR SUPPORTS COMPLYING WITH CRSI SPECIFICATIONS. SUPPORTS SHALL NOT BE PLACED FURTHER THAN 4 FEET APART. DAYTON SUPERIOR PRODUCTS (800-745-3700) OR EQUAL UNLESS NOTED OTHERWISE IN THE SPECIFICATIONS:
   A. USE SUPPORTS WITH SAND PLATES OR HORIZONTAL RUNNERS WHERE BASE MATERIAL WILL NOT SUPPORT CHAIR LEGS. CONCRETE BLOCK OR CLAY MASONRY MAY NOT BE USED.
   B. FOR EXPOSED TO VIEW CONCRETE SURFACES WHERE LEGS OF SUPPORTS ARE IN CONTACT WITH THE FORMS, PROVIDE SUPPORTS WITH LEGS THAT ARE PLASTIC PROTECTED (CRSI, CLASS 1) OR STAINLESS STEEL PROTECTED (CRSI, CLASS 2).
19. SEE ARCHITECTURAL AND MECHANICAL/ELECTRICAL DRAWINGS FOR EXACT LOCATIONS AND DETAILS OF DEPRESSED SLABS, FLOOR DRAIN LOCATIONS, PLATFORMS, CURBS, AND PADS.
20. USE ONE OF THE FOLLOWING SEALERS ON ALL INTERIOR EXPOSED CONCRETE SURFACES WHICH DO NOT RECEIVE A STAIN, PAINT OR OTHER TYPE OF COATING:
   A. SEAL HARD BY L&M
   B. EUCO DIAMOND HARD BY EUCLID
21. EVAPORATION REDUCERS SHALL BE USED AFTER EACH FINISHING OPERATION ON THE CAST IN PLACE CONCRETE FLOOR SLAB UNLESS PRIOR APPROVAL FROM THE ENGINEER HAS BEEN OBTAINED TO NOT USE. SEE SPECIFICATIONS FOR PRODUCT REQUIREMENTS.
22. SAWCUTS IN CONCRETE SLABS ON GRADE SHALL BE MADE AS SOON AS THE CONCRETE IS OF SUFFICIENT STRENGTH TO SAW WITHOUT RAVELING THE AGGREGATE. ANY TIME LAPSE GREATER THAN 8 HOURS AFTER PLACING THE CONCRETE SHALL BE PERMITTED ONLY IF APPROVED BY THE ENGINEER. FILL ALL INTERIOR JOINTS WITH MM-80 JOINT COMPOUND.
23. ADHESIVE ANCHORS WITH REBAR OR THREADED RODS SHALL BE AS NOTED BELOW. INSTALL ACCORDING TO THE MANUFACTURER'S RECOMMENDATIONS, WHICH INCLUDES CLEANING THE HOLE WITH AIR AND USING A MANUFACTURER APPROVED DISPENSING TOOL WITH MIXING NOZZLE.
   A. INTO CONCRETE: HILTI HIT-HY 200, OR APPROVED EQUAL.
   B. INTO GROUTED OR NON-GROUTED CMU: HILTI HIT-HY 70, OR APPROVED EQUAL.
24. NO PIPING OR CONDUITS SHALL BE INSTALLED IN ANY CONCRETE WITHOUT THE APPROVAL OF THE ENGINEER.
25. WATERSTOPS SHALL BE 6" PVC, CENTER BULB TYPE, SUCH AS GREENSTREAK STYLE 732. SEE SECTIONS FOR LOCATIONS.
26. ALL DOWELS, ANCHOR BOLTS, EMBEDDED STEEL, ELECTRICAL CONDUITS, PIPE SLEEVES, PIPING, WATERSTOPS, INSERTS, GROUNDS, AND ALL OTHER EMBEDDED ITEMS AND FORMED DETAILS SHALL BE IN PLACE BEFORE START OF CONCRETE PLACEMENT. FOR EMBEDDED ITEMS AND REQUIRED DETAILS, SEE CIVIL, MECHANICAL, ELECTRICAL, AND ARCHITECTURAL DRAWINGS. VERIFY SIZE AND LOCATION OF ALL OPENINGS.
27. ALL PIPING AND DUCT PENETRATIONS THROUGH NEW STRUCTURAL SLABS ARE TO BE SLEEVED OR CHASED. NO CORING OF SLAB IS PERMITTED. ALL PIPING THROUGH EXISTING STRUCTURAL SLABS MAY BE CORED IF APPROVED BY ENGINEER.
28. THE VAPOR RETARDER INDICATED ON THE SECTIONS SHALL BE EITHER STEGO 10 MIL CLASS A VAPOR RETARDER OR VAPOR BLOCK 10 BY RAVEN INDUSTRIES. USE STEGO OR RAVEN TAPE ON ALL LAPS AND AROUND ALL PENETRATIONS.
29. SUBMITTALS:
   A. PRODUCT DATA FOR PROPRIETARY MATERIALS AND ITEMS, INCLUDING REINFORCEMENT AND FORMING ACCESSORIES, ADMIXTURES, PATCHING COMPOUNDS, FLY ASH, AND OTHERS AS REQUESTED BY ENGINEER.
   B. SHOP DRAWINGS FOR CONTROL/CONSTRUCTION JOINT LAYOUT.
   C. SHOP DRAWINGS FOR FABRICATION, BENDING, AND PLACEMENT FOR CONCRETE REINFORCEMENT COMPLYING WITH THE LATEST EDITION OF THE ACI DETAILING MANUAL, INCLUDING DETAILS OF CONTROL AND CONSTRUCTION JOINTS. DUPLICATION OF CONTRACT DRAWINGS FOR SHOP DRAWINGS IS NOT PERMITTED.
   D. LABORATORY TEST RESULTS FOR CONCRETE MATERIALS AND MIX DESIGN TESTS. TEST REPORTS SHALL BE LESS THAN 12 MONTHS OLD.

CONCRETE MASONRY UNIT (CMU) WALL NOTES:

1. REFER TO THE ARCHITECTURAL DRAWINGS OR SPECIFICATIONS FOR TYPES OF MASONRY OTHER THAN CONCRETE MASONRY, SUCH AS BRICK. THESE NOTES DO NOT APPLY TO 4" VENEER CMU.
2. MORTAR SHALL CONFORM TO TABLE 1 OF ASTM C270, TYPE S. THE MORTAR MIX DESIGN (BY VOLUME) SHALL BE SUBMITTED TO THE ENGINEER BEFORE CONSTRUCTION BEGINS. HOLLOW CONCRETE MASONRY UNITS SHALL CONFORM TO ASTM C90 NORMALWEIGHT SPECIFICATIONS WITH A MINIMUM COMPRESSIVE STRENGTH OF 1900 PSI. THE SPECIFIED COMPRESSIVE STRENGTH, f'm, IS 2,000 PSI.
3. COARSE CONCRETE GROUT SHALL CONFORM TO ASTM C476 WITH A MAXIMUM AGGREGATE SIZE OF 3/8" AND A SLUMP OF 8 TO 11 INCHES. GROUT MAY BE EITHER READY MIXED OR JOB MIXED, AND SHALL BE BASED ON A MIX DESIGN (BY VOLUME) APPROVED BY THE ENGINEER. THE AMOUNT OF COARSE AGGREGATE SHALL NOT EXCEED THE AMOUNT OF FINE AGGREGATE. EVIDENCE THAT THE MIX DESIGN SHOULD ACHIEVE A 28 DAY MINIMUM COMPRESSIVE STRENGTH OF 2500 PSI SHALL BE PROVIDED TO THE ENGINEER. HOWEVER, THE CONTRACTOR SHALL BE RESPONSIBLE FOR THE COMPRESSIVE STRENGTH.
4. WHEN MIXING MORTAR AND GROUT, CONTAINERS OF KNOWN VOLUME SHALL BE USED. MEASUREMENT USING SHOVELS SHALL NOT BE ALLOWED. FOR GROUT, THE SAND AND PEA GRAVEL SHALL BE TAKEN FROM SEPARATE PILES, NOT FROM A PRE-BLENDED PILE. IF MEASUREMENT BY SHOVELING OR USE OF A PRE-BLENDED PILE IS DISCOVERED, THE ENGINEER MAY REQUIRE ALL WALLS BUILT SO FAR TO BE TESTED PER ASTM C 1314 BY CUTTING 3 MASONRY PRISMS AND 3 GROUT CORES OUT OF THE WALL FOR EVERY 5,000 SQUARE FEET OF WALL, AND MAY REQUIRE ANY AREA OF WALL TESTING BELOW 1,500 PSI TO BE REPLACED AT NO COST TO THE OWNER.
5. THREE GROUT PRISMS SHALL BE MADE DURING THE FIRST DAY OF MASONRY WORK AND FOR EVERY 5,000 SF OF WALL (OR LESS) THEREAFTER, WITH ALL THREE PRISMS TESTED AT 28 DAYS. THE ENGINEER MAY REQUIRE ANY AREA OF WALL TESTING BELOW 2,000 PSI TO BE REPLACED AT NO COST TO THE OWNER. EVERY TIME A SET OF GROUT PRISMS IS MADE, THE LABORATORY SHALL VERIFY:
   A. PROPORTIONS OF MORTAR AND GROUT MIXING
   B. REBAR AND JOINT REINFORCEMENT SIZES AND LOCATIONS
   C. PROPER GROUT PLACEMENT AT REBAR
   D. HEADJOINTS ARE FULLY MORTARED
   E. CONTROL JOINTS ARE REINFORCED AND FULLY MORTARED
   F. PROPER COLD AND HOT WEATHER PROCEDURES USED
6. COLD WEATHER AND HOT WEATHER PROCEDURES SHALL BE USED IN ACCORDANCE WITH ACI 530.1/ASCE 6/TMS 602 ARTICLE 1.8C AND 1.8D.
7. REINFORCING STEEL SHALL BE NEW DOMESTIC DEFORMED BILLET STEEL CONFORMING TO ASTM A-615 GRADE 60.
8. ALL NON-LOAD BEARING CMU WALLS SHALL BE REINFORCED HORIZONTALLY WITH STANDARD TRUSS TYPE DUR-O-WALL, AT 16 INCHES ON CENTER. HORIZONTAL BOND BEAMS SHALL BE LOCATED AT THE TOP COURSE OF THE WALL AND ABOVE AND BELOW OPENINGS. HORIZONTAL BEAMS SHALL BE REINFORCED WITH 2 #5 BARS, IN 8 INCH AND 12 INCH WALLS, OR 1 #4 BAR, IN 6 INCH WALLS. PROVIDE 1 #4 BAR VERTICAL REINFORCEMENT ON EACH SIDE OF AN OPENING. EXTEND REINFORCEMENT 2 FEET PAST EACH CORNER OF AN OPENING. REFER TO THE LINTEL SCHEDULE FOR ADDITIONAL REINFORCEMENT. ALL REINFORCEMENT BARS IN CMU WALL SHALL BE PROVIDED WITH 1" CONCRETE GROUT COVER.
9. THE MINIMUM SPLICE LENGTH FOR ALL VERTICAL AND HORIZONTAL REINFORCEMENT IN ALL MASONRY SHALL BE AS FOLLOWS:
   #5 BARS - 2'-7" (MIN)
10. PROVIDE VERTICAL CONTROL JOINTS AT LOCATIONS APPROVED BY THE ARCHITECT, WITH A MAXIMUM SPACING OF 20 FEET. HORIZONTAL BOND BEAM REINFORCEMENT SHALL CONTINUE THROUGH ALL CONTROL JOINTS IN ALL WALLS (BOTH LOAD-BEARING AND NON-LOAD BEARING WALLS). CONTROL JOINTS SHALL CONSIST OF A VERTICAL MASONRY JOINT, RAKED BACK AND CAULKED.

ALUMINUM GRATING NOTES:

1. ALUMINUM GRATING SHALL COMPLY WITH APPLICABLE PROVISIONS AND RECOMMENDATIONS OF THE FOLLOWING:
   A. NAAM METAL BAR GRATING MANUAL DESIGNATED ANSI/NAAMM MBG 531 (ALUMINUM AND LIGHT DUTY STEEL AND STAINLESS STEEL GRATING).
2. ALUMINUM MATERIAL SHALL BE ASTM B221, ALUMINUM ALLOY, EXTRUDED BARS, RODS, WIRE, SHAPES AND TUBING.
3. ALUMINUM GRATING SHALL BE:
   A. IKG BORDEN, INC. - TYPE FS,
   B. OHIO GRATINGS, INC. - TYPE 15-SG-4,
   C. OR EQUAL
4. PERIMETER FRAMES SHALL BE EXTRUDED DESIGN, ALLOY 6063-T6 AND SHALL BE PROVIDED BY MANUFACTURER OF APPROVED GRATING SYSTEM. FRAME ASSEMBLIES SHALL BE SHOP FABRICATED WITH MITER CUTS AND WELDED CORNERS AND SHALL BE SIZED TO MATCH GRATING DEPTH. ALL EXPOSED WELDS SHALL BE GROUND SMOOTH.
5. VERTICAL AND HORIZONTAL LEGS OF FRAME SHAPE SHALL HAVE 1/4" WALL THICKNESS. FRAME SHALL BE DESIGNED TO PROVIDE A CONTINUOUS SLOT TO ACCOMMODATE FASTENERS, AND SHALL HAVE A CONTINUOUS EXTRUDED ANCHOR.
6. TRAFFIC SURFACE FOR ALUMINUM BAR GRATINGS SHALL BE GROOVED.
7. INSTALL GRATING IN ACCORDANCE WITH SHOP DRAWINGS AND STANDARD INSTALLATION CLEARANCES AS RECOMMENDED BY THE NAAMM METAL BAR GRATING MANUAL.
8. PERFORM ALL CUTTING AND FITTING REQUIRED FOR INSTALLATION. GRATING SHALL BE PLACED SUCH THAT CROSS BARS ALIGN.
9. WHEREVER GRATING IS PIERCED BY PIPES, DUCTS AND STRUCTURAL MEMBERS, CUT OPENINGS NEATLY AND ACCURATELY TO SIZE AND WELD A RECTANGULAR BAND BAR OF THE SAME HEIGHT AND MATERIAL AS BEARING BARS.
10. CUTOUTS FOR CIRCULAR OBSTRUCTIONS ARE TO BE AT LEAST 2" LARGER IN DIAMETER THAN THE OBSTRUCTION. CUTOUTS FOR ALL PIPING 4" OR LESS SHALL BE MADE IN THE FIELD.
11. ALL RECTANGULAR CUTOUTS ARE TO BE MADE TO THE NEXT BEARING BAR BEYOND THE PENETRATION WITH A CLEARANCE NOT TO EXCEED BEARING BAR SPACING.
12. UTILIZE STANDARD PANEL WIDTHS WHEREVER POSSIBLE.
13. EDGE BAND ALL GRATING PANELS WITH ALUMINUM RECTANGULAR BAR OF SAME SIZE AS GRATING BARS. WELD EDGE BANDING AT EVERY GRATING BAR WITHIN CENTER 75 PERCENT OF BAR DEPTH. GRIND SMOOTH ALL WELDS THAT EXTEND PAST THE TOP OR BOTTOM EDGE.
14. SIZE OF GRATING PANELS SHALL NOT EXCEED 60 POUNDS PER SECTION.
15. GRATING SECTIONS SHALL BE FASTENED DOWN WITH TYPE 316 STAINLESS STEEL SADDLE CLIPS. PROVIDE A MINIMUM OF FOUR FASTENERS (ONE AT EACH CORNER) PER PANEL.
16. ALL ALUMINUM FRAMES AND SUPPORTS IN DIRECT CONTACT WITH CONCRETE OR MASONRY SHALL BE BACKPAINTED WITH BITUMINOUS PAINT.

Drawing Copyright © 2014

CHA
1901 Innovation Drive, Suite 2100
Blacksburg, VA 24060
Main: (518) 453-4500 www.chacompanies.com

PRE-ENGINEERED METAL BUILDING NOTES

1. BEFORE FABRICATION, SHOP DRAWINGS OF THE METAL BUILDING SHALL BE SUBMITTED TO ~~CHA~~ ENGINEER FOR REVIEW AND COMMENT. SHOP DRAWINGS AND CALCULATIONS SHALL BE SIGNED AND SEALED BY AN ENGINEER LICENSED IN THE COMMONWEALTH OF VIRGINIA.
2. THE LATERAL DEFLECTION OF THE LATERAL FORCE RESISTING SYSTEMS SHALL NOT EXCEED H/180 FOR ANY BUILDING AND H/300 FOR ANY BUILDING WITH MASONRY VENEER HIGHER THAN 8 FEET ABOVE FINISH FLOOR. THE LATERAL DEFLECTION OF THE GIRTS AND METAL SIDING SHALL BE L/120 FOR ANY WALL, AND L/240 FOR ANY TRIBUTARY AREA WITH MASONRY VENEER.
3. ALL COLD-FORMED STEEL SHALL BE DESIGNED BY THE METAL BUILDING ENGINEER PER AISI-NASPEC 2001. THE FOLLOWING ARE ADDITIONAL MINIMUM REQUIREMENTS FOR THE PURLINS AND GIRTS ON THIS PROJECT:
   A. BOTH FLANGES SHALL BE BRACED AT 8 FT OC MAXIMUM.
   B. BRACING LINES SHALL CONSIST OF 16 GAGE STRAPS X 1.5" WITH A #12 SCREW AT EACH FLANGE.
   C. BRACING LINES SHALL BE ANCHORED WITH 2 HORIZONTAL AND 2 DIAGONAL L1.5X1.5X16 GAUGE ANGLES AT EACH END BAY, AT BOTH SIDES OF RIDGES, AND AT 50 FT OC MAXIMUM. HORIZONTAL ANGLES SHALL BE COPED AND ATTACHED TO EACH FLANGE WITH 2 #12 SCREWS. ATTACH DIAGONALS TO HORIZONTALS WITH 2#12 SCREWS.
   D. BRACING STRAPS MAY BE OMITTED ON FLANGES THAT ARE BRACED WITH THROUGH-FASTENED ROOF PANELS OR METAL SIDING.
4. THE METAL BUILDING ENGINEER SHALL DETERMINE THE DIAMETER OF THE ANCHOR BOLTS REQUIRED FOR THE TYPICAL ANCHOR BOLT DETAIL.

PRE-ENGINEERED METAL BUILDING DESIGN CRITERIA:

THE METAL BUILDING SHALL BE DESIGNED FOR THE FOLLOWING MINIMUM LOADS AND SHALL BE DESIGNED IN ACCORDANCE WITH THE 2012 VIRGINIA UNIFORM STATEWIDE BUILDING CODE:

BUILDING CLASSIFICATION:	III	
ROOF DEAD LOAD:	SELF WEIGHT PER BUILDING MANUFACTURER	
COLLATERAL LOAD:	5	PSF
ROOF LIVE LOAD:	20	PSF
MONORAIL FOR STRAINERS:	1300	LBS
MONORAIL FOR TREATED WATER PUMPS:	4300	LBS
SNOW LOAD:		
GROUND SNOW LOAD:	30	PSF
FLAT-ROOF SNOW LOAD:	23.1	PSF
SNOW EXPOSURE FACTOR, Ce:	1.0	
SNOW IMPORTANCE FACTOR, I:	1.1	
THERMAL FACTOR, Ct:	1.0	
WIND DESIGN DATA:		
BASIC WIND SPEED (3 SECOND GUST):	120	MPH
WIND IMPORTANCE FACTOR:	1.0	
WIND EXPOSURE CATEGORY:	C	
INTERNAL PRESSURE COEFFICIENTS:	+/- 0.18	

ALL NEW COMPONENTS AND CLADDING NOT DESIGNED BY THE ENGINEER SHALL BE DESIGNED FOR 25 PSF UNLESS OTHERWISE APPROVED BY THE ENGINEER.

EARTHQUAKE DESIGN DATA:	
SEISMIC IMPORTANCE FACTOR:	1.25
MAPPED SPECTRAL RESPONSE ACCELERATIONS:	SS = 0.170 S1 = 0.073
SITE CLASS:	D
SEISMIC DESIGN CATEGORY:	B
BASIC SEISMIC-FORCE-RESISTING SYSTEM:	PER BUILDING MANUFACTURER
DESIGN BASE SHEAR, V:	PER BUILDING MANUFACTURER
SEISMIC RESPONSE COEFFICIENT, Cs:	PER BUILDING MANUFACTURER
RESPONSE MODIFICATION FACTOR, R:	PER BUILDING MANUFACTURER
ANALYSIS PROCEDURE USED:	PER BUILDING MANUFACTURER

PRELIMINARY - NOT FOR CONSTRUCTION

A 2/27/15 LEVEL 2 DESIGN DOCUMENTS
NO. DATE REVISIONS AND RECORD OF ISSUE BY CHK APP

BLACK & VEATCH
Building a world of difference
Black & Veatch Corporation
Kansas City, Missouri

BEDFORD REGIONAL WATER AUTHORITY
SMITH MOUNTAIN LAKE WTP & LAKES TO FOREST WATER LINE EXTENSION

STRUCTURAL - GENERAL NOTES AND DESIGN CRITERIA

DESIGNED: EAB
DETAILED: CEC
CHECKED: CJJ
APPROVED: CJJ
DATE: 05/16/14

IF THIS BAR DOES NOT MEASURE 1" THEN DRAWING IS NOT TO FULL SCALE

CHA PROJECT NO. 27872

S-30-001
SHEET
OF

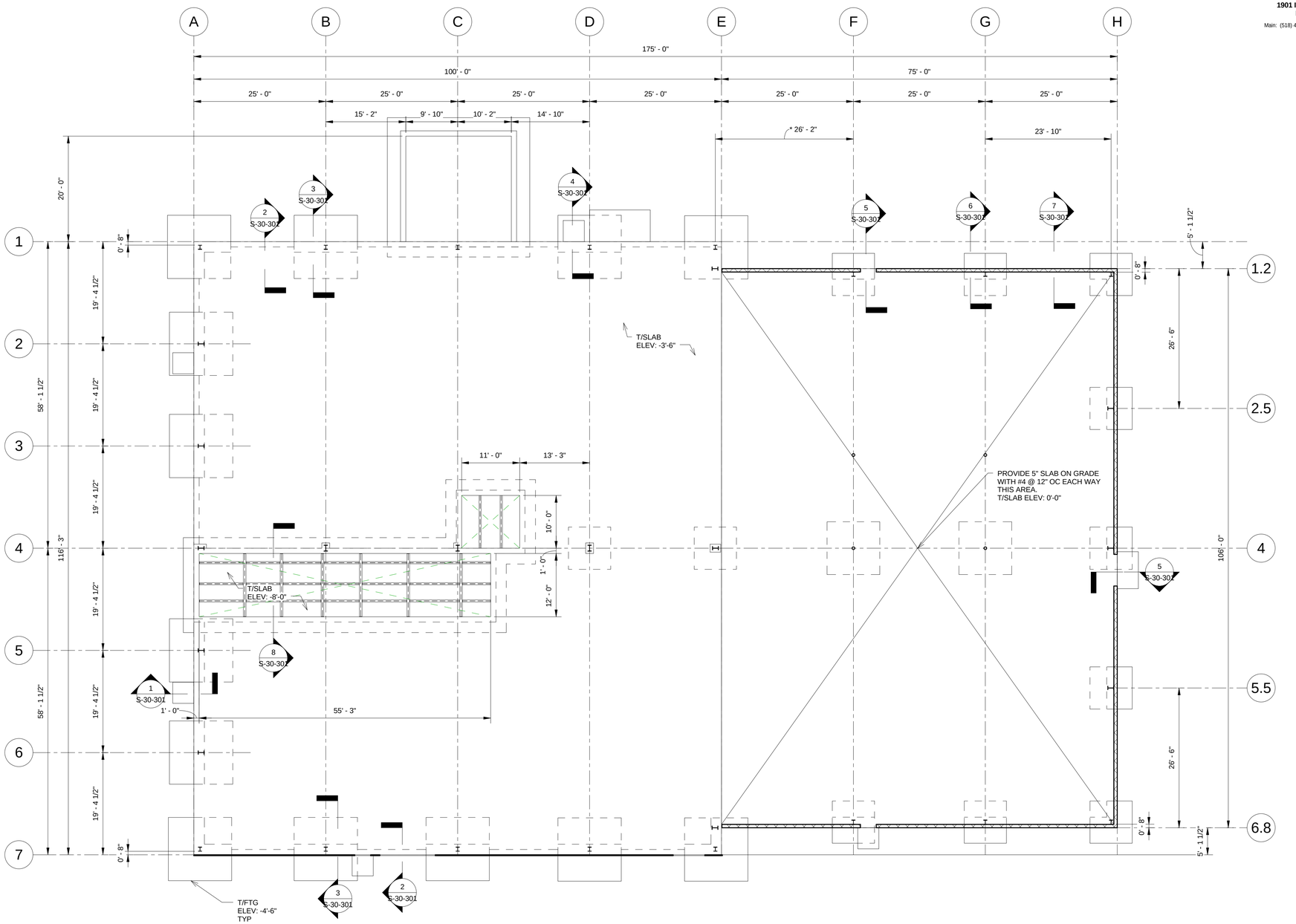

NOTES:
1. PROVIDE A 10" SLAB ON GRADE WITH #4 @ 12" OC EACH WAY, TOP AND BOTTOM, UNLESS NOTED OTHERWISE. T/SLAB ELEV: 0'-0" UNLESS NOTED OTHERWISE ON PLAN.
2. * DIMENSIONS ARE BASED ON DRAWINGS PROVIDED BY BUTLER MANUFACTURING DATED APRIL 2014. DIMENSIONS SHALL BE COORDINATED WITH APPROVED PRE-ENGINEERED MEAL BUILDING SHOP DRAWINGS PRIOR TO REBAR FABRICATION AND CONCRETE PLACEMENT.

FOUNDATION/OPERATING
FLOOR PALN
3/32" = 1'-0"

PRELIMINARY - NOT FOR CONSTRUCTION

Drawing Copyright © 2014

CHA
1901 Innovation Drive, Suite 2100
Blacksburg, VA 24060
Main: (518) 453-4500 www.chacompanies.com

DATE	REVISIONS AND RECORD OF ISSUE	NO.	BY	CHK	APP
2/27/15	LEVEL 2 DESIGN DOCUMENTS	A			

PW: C:\Users\4193\Documents\27872 - STRUC13 - CENTRAL (RNY)_MFARONE.rvt
SW:
SAVED: 2/27/2015 2:39:18 PM
PLOTTED:
USER:
DWG VER: A
XREF1:
XREF2:
XREF3:
XREF4:

BLACK & VEATCH
Building a world of difference
Black & Veatch Corporation
Kansas City, Missouri

BEDFORD REGIONAL WATER AUTHORITY
SMITH MOUNTAIN LAKE WTP & LAKES TO
FOREST WATER LINE EXTENSION

STRUCTURAL - MEMBRANE/ADMIN BUILDING
FOUNDATION/OPERATING FLOOR PLAN

DESIGNED: EAB
DETAILED: CEC
CHECKED: CJJ
APPROVED: CJJ
DATE: 05/16/14

0 1/2 1
IF THIS BAR DOES NOT MEASURE 1" THEN DRAWING IS NOT TO FULL SCALE

CHA PROJECT NO.
27872

S-30-102
SHEET
OF

D7000

Drawing Copyright © 2014

CHA
1901 Innovation Drive, Suite 2100
Blacksburg, VA 24060
Main: (518) 453-4500 www.chacompanies.com

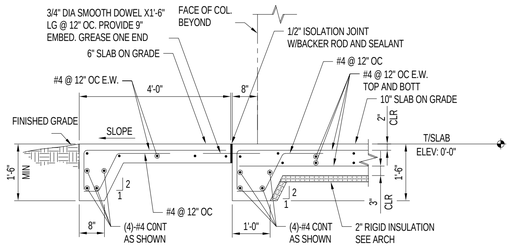

SECTION 01
1/2" = 1'-0"

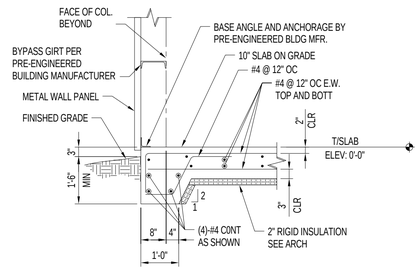

SECTION 02
1/2" = 1'-0"

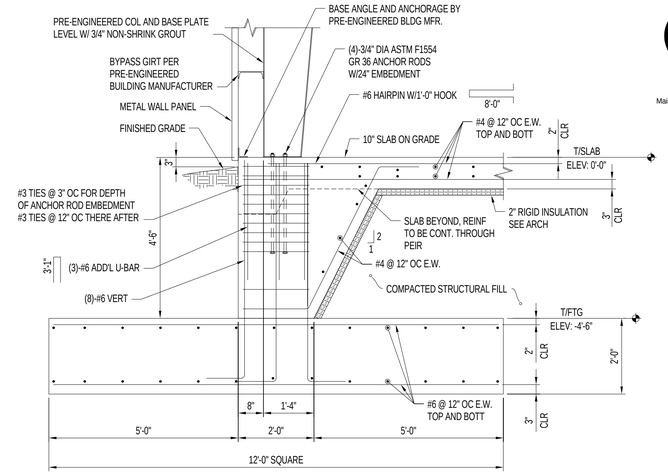

SECTION 03
1/2" = 1'-0"

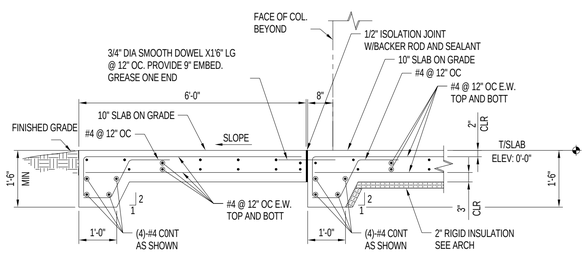

SECTION 04
1/2" = 1'-0"

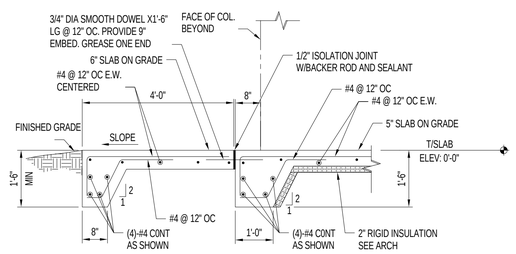

SECTION 05
1/2" = 1'-0"

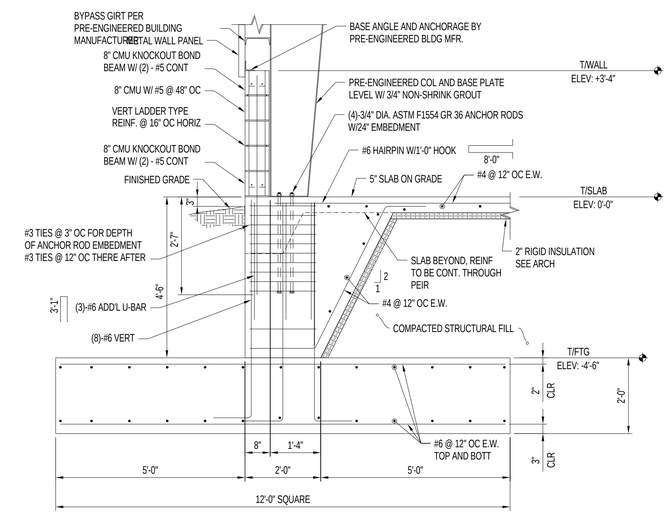

SECTION 06
1/2" = 1'-0"

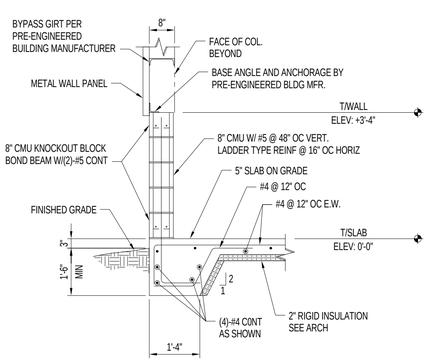

SECTION 07
1/2" = 1'-0"

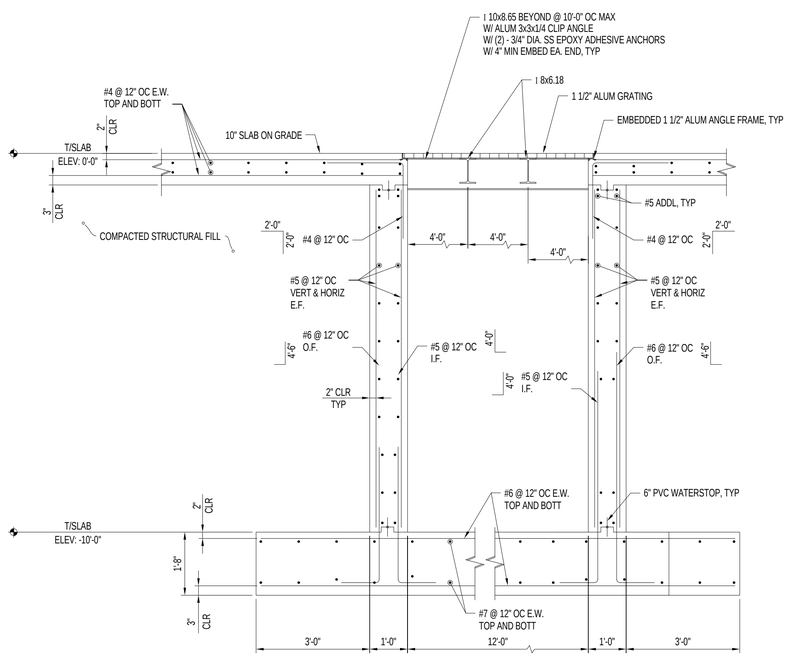

SECTION 08
1/2" = 1'-0"

PRELIMINARY - NOT FOR CONSTRUCTION

NO.	BY	CHK	APP
A			

2/27/15 LEVEL 2 DESIGN DOCUMENTS
DATE REVISIONS AND RECORD OF ISSUE

PW: C:\Users\41193\Documents\27872 - STRUCTS - CENTRAL (PRV)_MEMBRANE.pwt
SAVED: 2/27/2015 2:39:18 PM
PLOTTED:
USER:
DWG VER: A
XREF1:
XREF2:
XREF3:
XREF4:

BLACK & VEATCH
Building a world of difference.
Black & Veatch Corporation
Kansas City, Missouri

BEDFORD REGIONAL WATER AUTHORITY
SMITH MOUNTAIN LAKE WTP & LAKES TO FOREST WATER LINE EXTENSION

STRUCTURAL - MEMBRANE/ADMIN BUILDING FOUNDATION SECTIONS

DESIGNED: EAB
DETAILED: CEC
CHECKED: CJJ
APPROVED: CJJ
DATE: 05/16/14

0 1/2 1
IF THIS BAR DOES NOT MEASURE 1" THEN DRAWING IS NOT TO FULL SCALE

CHA PROJECT NO. 27872

S-30-301
SHEET
OF

D7000

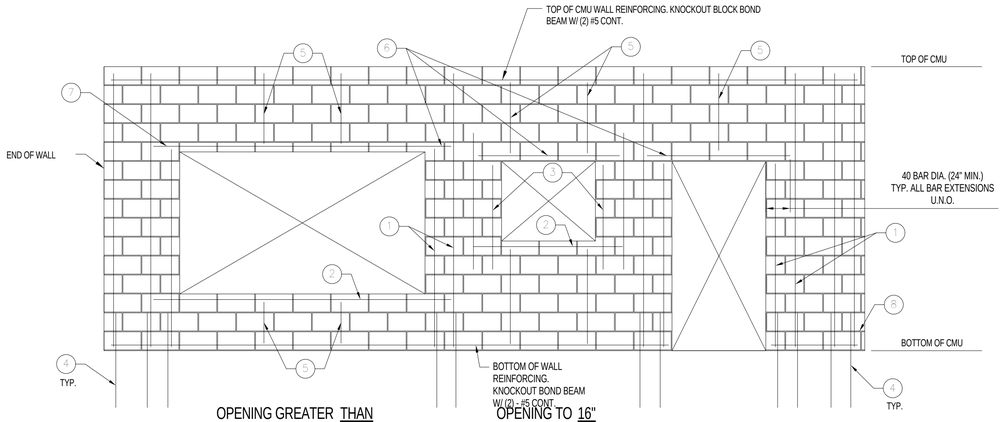

OPENING GREATER THAN 16" WIDE

OPENING TO 16" WIDE

DOOR

1. SEE TYPICAL CMU WALL OPENING DETAIL, THIS SHEET. BARS IN CORES DIRECTLY ADJACENT TO OPENING EXTEND TO UNDERSIDE OF LINTEL BEARING. BARS IN CORES 12" AND GREATER FROM OPENINGS EXTEND FULL HEIGHT OF WALL, TYP.
2. SILL BARS. KNOCK OUT BLOCK BOND BEAM W/(2) #5 CONT. BELOW ALL OPENINGS
3. (1) #5 EACH SIDE
4. SEE TYPICAL CMU WALL REINFORCING DETAIL
5. BETWEEN BARS SHOWN, PROVIDE TYPICAL WALL REINF PER TYP. WALL REINFORCING DETAIL
6. U-BLOCK OR STEEL LINTELS, SEE LINTEL SCHEDULE. PROVIDE KNOCKOUT BOND BEAM W/(2)#5 CONTINUOUS ABOVE ALL STEEL LINTELS
7. IF FULL LENGTH IS NOT AVAILABLE, EXTEND AS FAR AS POSSIBLE, HOOK 90°, THEN EXTEND. BEYOND BEND, REMAINDER OF LENGTH REQ'D (NOT LESS THAN 12")
8. PROVIDE HORIZONTAL LADDER TYPE JOINT REINFORCEMENT AT 16" O.C. MAX.

TYP. MASONRY WALL REINFORCEMENT LAYOUT DETAIL

SCALE: N.T.S.

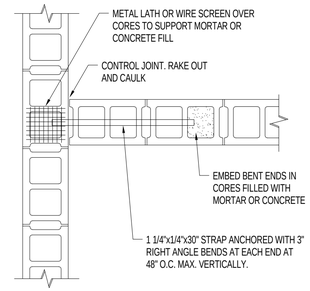

TYP. MASONRY DETAIL AT INTERSECTION

NOT TO SCALE

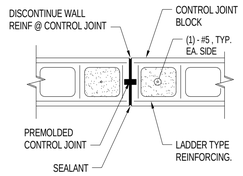

TYP. MASONRY CONTROL JOINT DETAIL

NOT TO SCALE

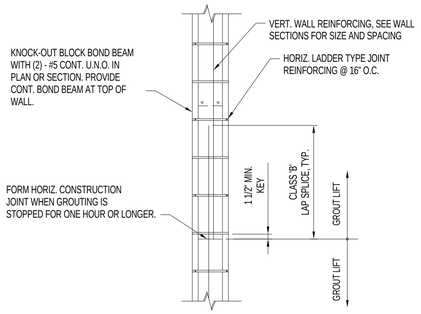

TYP. MASONRY WALL VERTICAL LAP SPLICE DETAIL

NOT TO SCALE

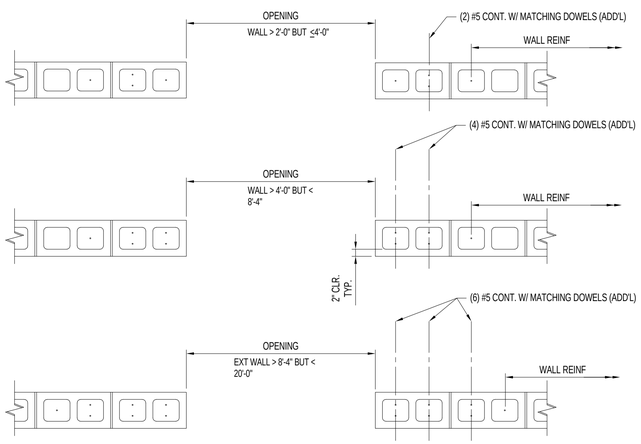

TYP. ADDITIONAL REINFORCING AT CMU OPENING DETAIL

NOT TO SCALE

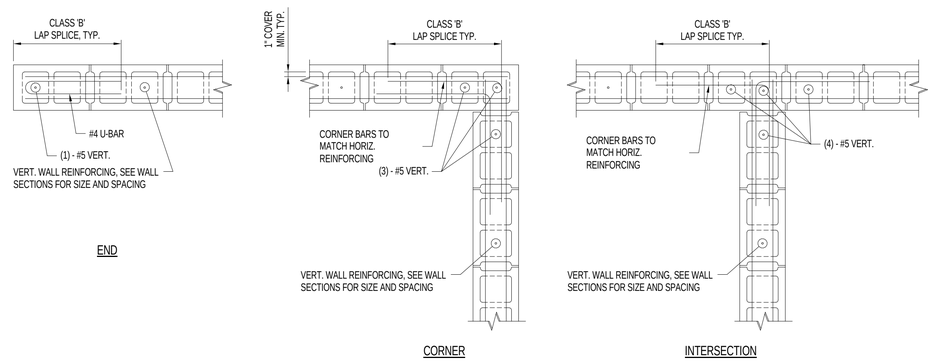

END

CORNER

INTERSECTION

TYP. BOND BEAM DETAILS

NOT TO SCALE

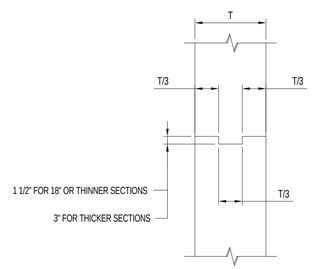

TYP. CONCRETE KEYS

NOT TO SCALE

REINFORCING LAP LENGTH			
BAR SIZE	LAP CLASS	VERT.	HORIZ.
#3	B	18	24
#4	B	25	32
#5	B	31	40
#6	B	37	48
#7	B	54	70
#8	B	62	80
#9	B	69	90
#10	B	77	100

NOTES:
1. TABLE TO BE INCLUDED ON ALL REINFORCING SHOP DRAWINGS.

TYP. REINFORCING LAP LENGTH SCHEDULE

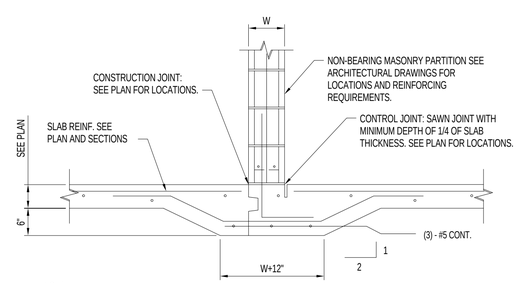

NOTE:
1. PROVIDE EITHER CONSTRUCTION OR CONTROL JOINT, NOT BOTH. BOTH TYPES OF JOINTS ARE SHOWN FOR INFORMATIONAL PURPOSES.
2. COORDINATE JOINT LOCATIONS WITH PLANS AND REINFORCING SUPPLIER.
3. SEE SPECIFICATIONS FOR UNDER SLAB MATERIAL REQUIREMENTS.
4. NOT INTENDED FOR USE AT LIQUID CONTAINMENT STRUCTURES.

TYP. SHALLOW FOOTING DETAIL

NOT TO SCALE

INTERIOR LINTEL SCHEDULE					
(NON-LOADBEARING MASONRY PARTITION WALLS ONLY)					
MAXIMUM MASONRY OPENING	MASONRY WALL THICKNESS				
	4 INCH WALLS	6 INCH WALLS	8 INCH WALLS	10 INCH WALLS	12 INCH WALLS
4'-0"	(1) L4x3 1/2x1/4	(2) L3x2 1/2x1/4	(2) L4x3 1/2x1/4	L5x5x1/4 + L4x3 1/2x1/4	(3) L4x3 1/2x1/4
6'-0"	(1) L5x3 1/2x1/4	(2) L3 1/2x2 1/2x1/4	(2) L5x3 1/2x1/4	L5x5x1/4 + L5x3 1/2x1/4	(3) L4x3 1/2x1/4
8'-0"	(1) L6x3 1/2x1/4	(2) L3 1/2x2 1/2x1/4	(2) L6x3 1/2x1/4	L5x5x5/16 + L5x3 1/2x5/16	(3) L4x3 1/2x1/4

NOTES
1. INTERIOR LINTELS ARE NOT SHOWN ON STRUCTURAL PLANS.
2. ALL HORIZONTAL LINTEL ELEMENTS SUPPORTING EXTERIOR WYTHES OF MASONRY SHALL BE HOT DIP GALVANIZED.
3. SEE ARCHITECTURAL AND MECHANICAL DRAWINGS FOR SIZE AND LOCATION OF OPENINGS.
4. FOR OPENINGS OVER 8'-0" CONSULT STRUCTURAL ENGINEER.
5. ALL ANGLES SCHEDULED ABOVE SHALL BE ORIENTED WITH LONG LEGS VERTICAL, U.N.O.
6. TACK WELD BACK-TO-BACK VERTICAL LEGS OF MULTIPLE ANGLE LINTELS.
7. LOOSE LINTELS UP TO 4'-0" TO HAVE A 4" MIN. BEARING, UP TO 8'-0" TO HAVE 6" MIN. BEARING.
8. STEEL LINTELS SHALL NOT BE USED IN MASONRY FIREWALLS. ONLY CMU LINTELS ARE ACCEPTABLE. AT MASONRY OPENINGS NOT SHOWN ON STRUCTURAL DRAWINGS, CONSULT ARCHITECT.

TYP. INTERIOR LINTEL SCHEDULE

NOT TO SCALE

PRELIMINARY - NOT FOR CONSTRUCTION

Drawing Copyright © 2014

CHA
1901 Innovation Drive, Suite 2100
Blacksburg, VA 24060
Main: (518) 453-4500 www.chacompanies.com

NO.	BY	CHK	APP	DATE	REVISIONS AND RECORD OF ISSUE
A				2/27/15	LEVEL 2 DESIGN DOCUMENTS

PW: C:\Users\41193\Documents\27872 - STRUCTURAL (PRV)_MFAROWE.pwt
SAVED: 2/27/2015 2:39:19 PM
PLOTTED:
USER:
XREF1:
XREF2:
XREF3:
XREF4:
DWG VER: A

BLACK & VEATCH
Building a world of difference.
Black & Veatch Corporation
Kansas City, Missouri

BEDFORD REGIONAL WATER AUTHORITY
SMITH MOUNTAIN LAKE WTP & LAKES TO FOREST WATER LINE EXTENSION

STRUCTURAL - STANDARD DETAILS

DESIGNED: EAB
DETAILED: CEC
CHECKED: CJJ
APPROVED: CJJ
DATE: 05/16/14

0 1/2 1
IF THIS BAR DOES NOT MEASURE 1" THEN DRAWING IS NOT TO FULL SCALE

CHA PROJECT NO. 27872

S-30-501
SHEET
OF

D7000

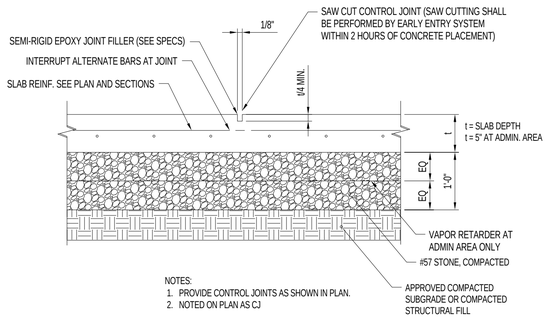

NOTES:
1. PROVIDE CONTROL JOINTS AS SHOWN IN PLAN.
2. NOTED ON PLAN AS CJ

TYP. SLAB ON GRADE CONTROL JOINT DETAIL
NOT TO SCALE

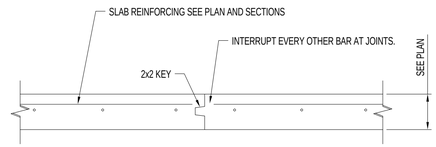

NOTE:
1. COORDINATE CONSTRUCTION JOINT LOCATIONS WITH PLANS AND REINFORCING SUPPLIER.
2. LOCATION CONSTRUCTION JOINTS AT CONTROL JOINT LOCATIONS.
3. SEE SPECIFICATIONS FOR UNDER SLAB MATERIAL REQUIREMENTS.

TYP. SLAB ON GRADE CONSTRUCTION JOINT DETAIL
NOT TO SCALE

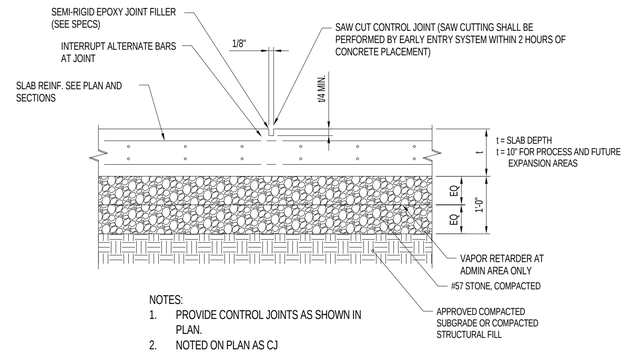

NOTES:
1. PROVIDE CONTROL JOINTS AS SHOWN IN PLAN.
2. NOTED ON PLAN AS CJ

TYP. SLAB ON GRADE CONTROL JOINT DETAIL
NOT TO SCALE

Drawing Copyright © 2014
CHA
1901 Innovation Drive, Suite 2100
Blacksburg, VA 24060
Main: (518) 453-4500 www.chacompanies.com

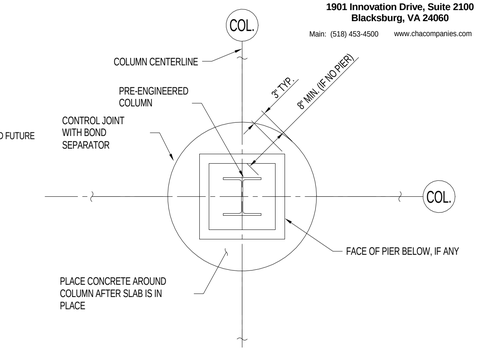

TYP. COLUMN ISOLATION JOINT DETAIL
NOT TO SCALE

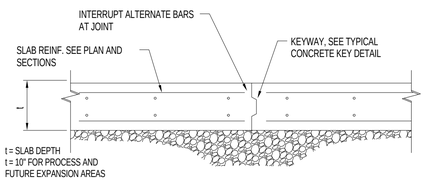

NOTES:
1. COORDINATE CONSTRUCTION JOINT LOCATIONS WITH PLANS AND REINFORCING SUPPLIER.
2. LOCATE CONSTRUCTION JOINTS AT CONTROL JOINT LOCATIONS.

TYP. SLAB ON GRADE CONSTRUCTION JOINT DETAIL
NOT TO SCALE

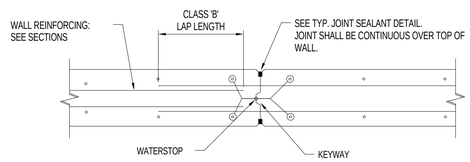

NOTE:
1. LOCATE AT 30'-0" OC MAXIMUM, UNLESS NOTED OTHERWISE ON PLANS.
2. PROVIDE CONTINUOUS WATERSTOP AT ALL WALLS. STOP WATERSTOP 2" BELOW TOP OF WALL.

TYP. CONCRETE FOUNDATION WALL CONSTRUCTION JOINT DETAIL (PLAN) AT PIPE TRENCHES AND CONTAINMENT AREAS
NOT TO SCALE

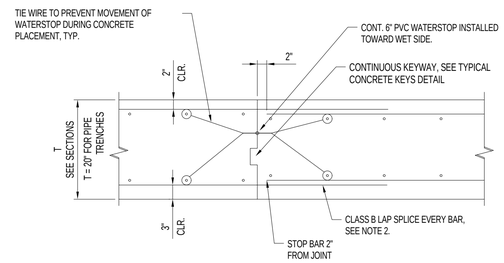

NOTE:
1. SEE PLAN FOR REQUIRED CONSTRUCTION JOINT LOCATIONS.
2. REINFORCING STEEL SHALL BE LAPPED PER REINFORCING LAP LENGTH SCHEDULE U.N.O.
3. SEE SECTIONS FOR SLAB SIZE AND REINFORCING.
4. PROVIDE 48 HOURS BETWEEN ADJACENT POURS AT CONSTRUCTION JOINTS, TYP

TYP BASE SLAB CONSTRUCTION JOINT DETAIL AT PIPE TRENCHES AND CONTAINMENT AREAS
NOT TO SCALE

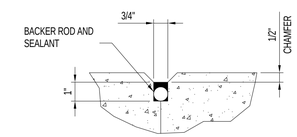

TYP JOINT SEALANT DETAIL
NOT TO SCALE

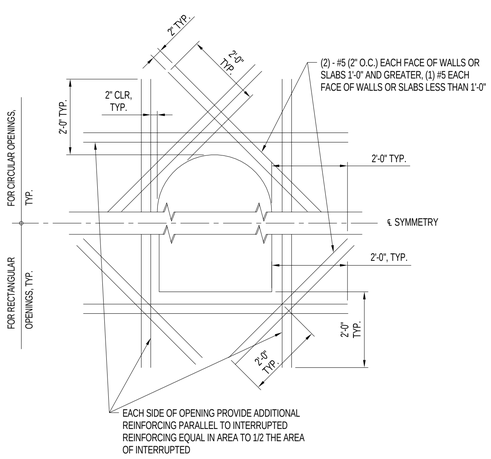

NOTES:
USE ABOVE REINFORCING AROUND OPENING 1'-0" AND LARGER UNLESS NOTED OTHERWISE ON DRAWINGS. FOR OPENINGS LESS THAN 1'-0", NO ADDITIONAL REINFORCING IS REQUIRED. UNLESS NOTED OTHERWISE ON DRAWINGS.

TYP. REINFORCING AT RECTANGULAR AND CIRCULAR OPENINGS IN SLABS AND WALLS
NOT TO SCALE

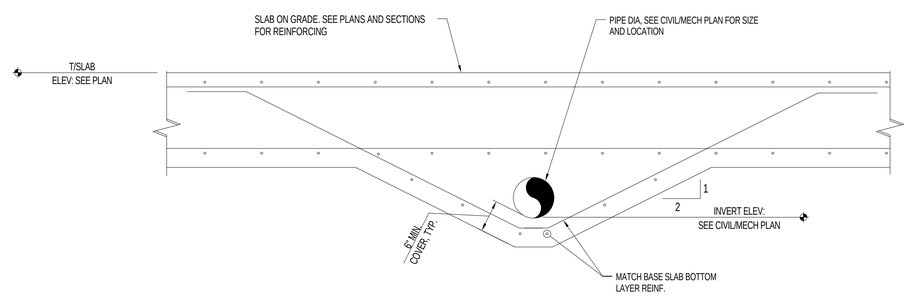

TYP CONCRETE ENCASEMENT AROUND UNDERGROUND PIPES
NOT TO SACLE

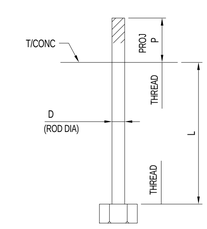

ANCHOR ROD SCHEDULE				
No.	D	L	P	MATERIAL
AB1	3/4"	24"	3"	ASTM F1554, GR 36

NOTES:
1. FOR PRE-ENGINEERED BLDG. ANCHOR ROD LAYOUT AND LOCATIONS, SEE APPROVED PRE-ENGINEERED BLDG MANUFACTURER'S DRAWINGS.

ANCHOR ROD SCHEDULE
SCALE: NTS

PRELIMINARY - NOT FOR CONSTRUCTION

NO.	BY	CHK	APP
A			

2/27/15 LEVEL 2 DESIGN DOCUMENTS
DATE REVISIONS AND RECORD OF ISSUE

PW: C:\Users\4193\Documents\27872 - STRUCTURAL (PRV)_MFARONE.pwt
SAVED: 2/27/2015 2:39:20 PM
PLOTTED:
USER:
XREF1:
XREF2:
XREF3:
XREF4:
DWG VER: A

BLACK & VEATCH
Building a world of difference.
Black & Veatch Corporation
Kansas City, Missouri

BEDFORD REGIONAL WATER AUTHORITY
SMITH MOUNTAIN LAKE WTP & LAKES TO FOREST WATER LINE EXTENSION

STRUCTURAL - STANDARD DETAILS

DESIGNED: EAB
DETAILED: CEC
CHECKED: CJJ
APPROVED: CJJ
DATE: 05/16/14

0 1/2 1
IF THIS BAR DOES NOT MEASURE 1" THEN DRAWING IS NOT TO FULL SCALE

CHA PROJECT NO. 27872

S-30-502
SHEET
OF

D7000

Drawing Copyright © 2014

CHA
1901 Innovation Drive, Suite 2100
Blacksburg, VA 24060
Main: (518) 453-4500 www.chacompanies.com

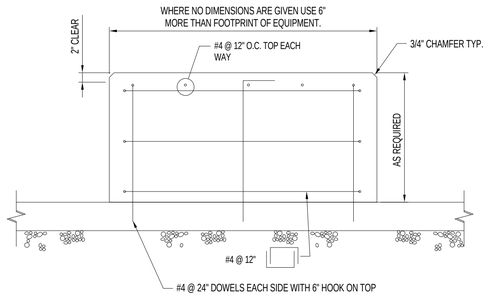

HEAVY EQUIPMENT/PUMP PAD

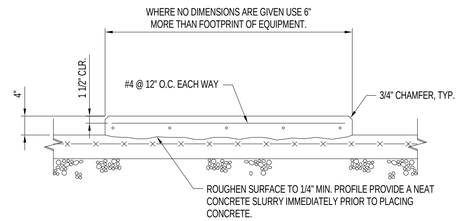

GENERAL HOUSEKEEPING PAD

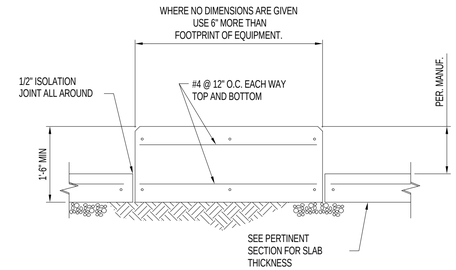

ISOLATED EQUIPMENT PAD

TYP. EQUIPMENT PAD REINFORCING DETAILS

NOT TO SCALE

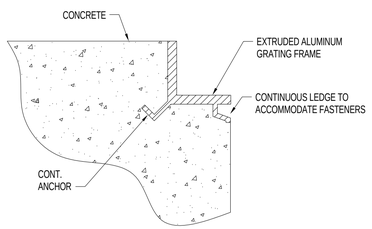

NOTES:
1. BACKPAINT ALL ALUMINUM IN CONTACT WITH CONCRETE WITH BITUMINOUS PAINT

TYP. ALUMINUM GRATING FRAME DETAIL

NOT TO SCALE

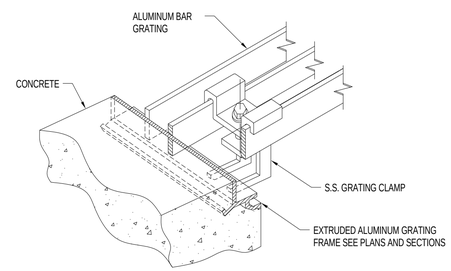

NOTES:
1. PROVIDE MANUFACTURER'S STANDARD EMBEDDED ANGLE TO ACCOMMODATE MANUFACTURER'S STANDARD GRATING CLAMPS OR SUBMIT PROPOSED GRATING CLAMP AND ANCHOR DETAIL FOR REVIEW AND APPROVAL

TYP. ALUMINUM GRATING CLAMP CONNECTION DETAIL

NOT TO SCALE

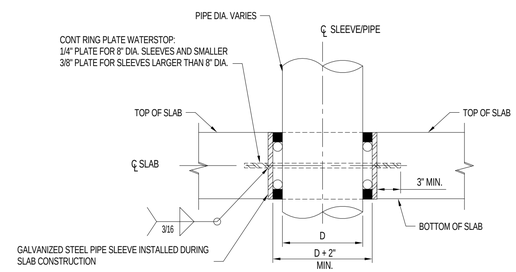

NOTE:
1. D = NOMINAL PIPE SIZE DIAMETER
2. REFERENCE CIVIL AND MECHANICAL DRAWINGS FOR QUANTITIES AND LOCATIONS.

TYP. PIPE SLEEVE THRU NEW SLAB ON GRADE

SCALE: NTS

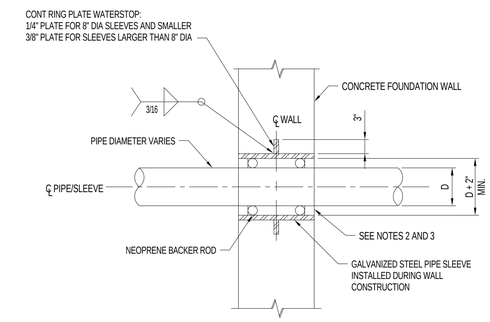

NOTE:
1. D = NOMINAL PIPE SIZE DIAMETER
2. SEAL GAP BETWEEN PIPE AND PIPE SLEEVE WATER TIGHT WITH MASTIC OR BITUMINOUS COATING.
3. SEAL GAP BETWEEN PIPE AND CONCRETE WALL WATER TIGHT WITH "LINK-SEAL" OR EQUAL.
4. REFERENCE CIVIL AND MECHANICAL DRAWINGS FOR QUANTITIES AND LOCATIONS.

TYP. PIPE SLEEVE THROUGH NEW FOUNDATION WALL

NOT TO SCALE

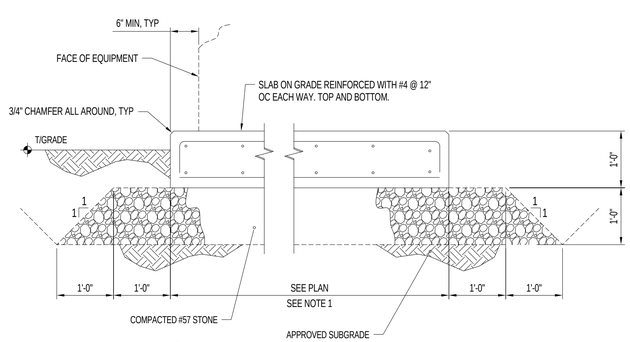

NOTE:
1. CONCRETE PAD TO EXTEND 6" MINIMUM BEYOND EQUIPMENT ON ALL SIDES. COORDINATE DIMENSIONS WITH EQUIPMENT.

GENERATOR CONCRETE PAD DETAIL

NOT TO SCALE

PRELIMINARY - NOT FOR CONSTRUCTION

NO.	BY	CHK	APP
A			

2/27/15 LEVEL 2 DESIGN DOCUMENTS
DATE REVISIONS AND RECORD OF ISSUE

PW: C:\Users\41931\Documents\27872 - STRUCTURAL (PRV)_MFAROWE.rvt
SAVED: 2/27/2015 2:39:21 PM
PLOTTED:
USER:
XREF1:
XREF2:
XREF3:
XREF4:
DWG VER: A

BLACK & VEATCH
Building a world of difference.
Black & Veatch Corporation
Kansas City, Missouri

BEDFORD REGIONAL WATER AUTHORITY
SMITH MOUNTAIN LAKE WTP & LAKES TO FOREST WATER LINE EXTENSION

STRUCTURAL - STANDARD DETAILS

DESIGNED: EAB
DETAILED: CEC
CHECKED: CJJ
APPROVED: CJJ
DATE: 05/16/14

0 1/2 1
IF THIS BAR DOES NOT MEASURE 1" THEN DRAWING IS NOT TO FULL SCALE

CHA PROJECT NO. 27872

S-30-503
SHEET
OF

D7000

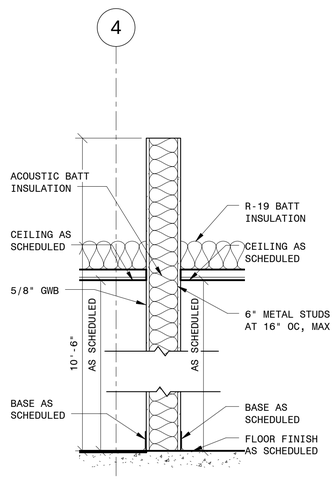

1 PARTITION TYPE 1
3/4" = 1'-0"

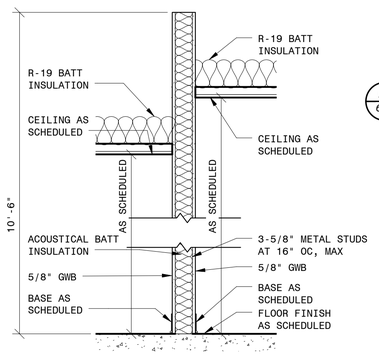

2 PARTITION TYPE 1
3/4" = 1'-0"

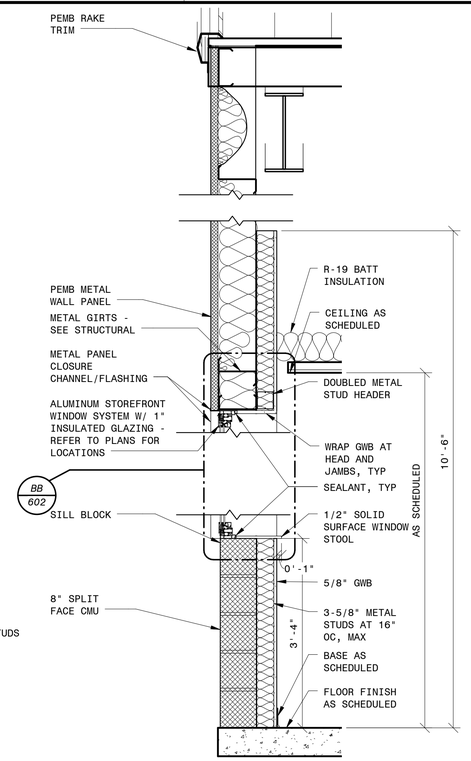

3 PARTITION TYPE 3
3/4" = 1'-0"

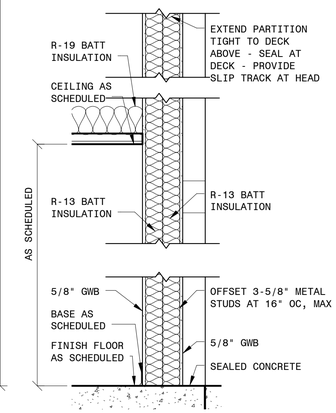

4 PARTITION TYPE 4
3/4" = 1'-0"

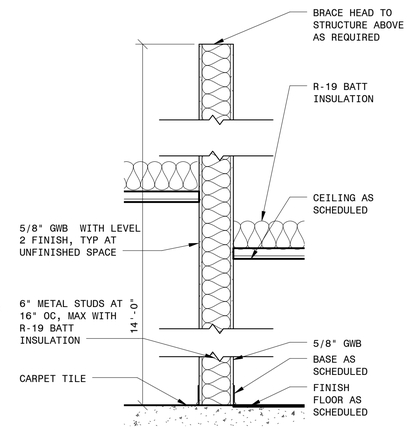

5 PARTITION TYPE 5
3/4" = 1'-0"

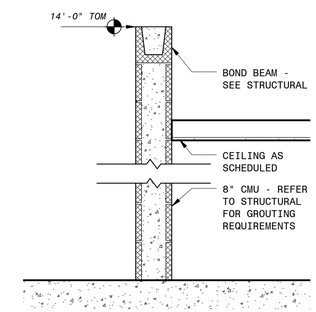

6 PARTITION TYPE 6
3/4" = 1'-0"

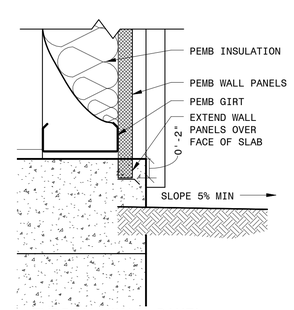

B TYPICAL WALL PANEL TERMINATION DETAIL
1 1/2" = 1'-0"

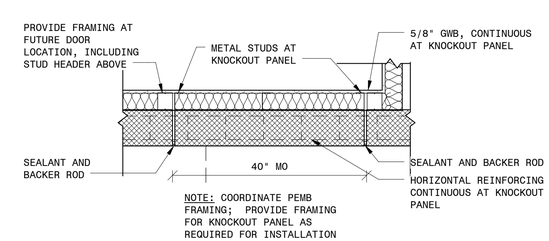

NOTE: COORDINATE PEMB FRAMING; PROVIDE FRAMING FOR KNOCKOUT PANEL AS REQUIRED FOR INSTALLATION OF FUTURE DOOR.

A KNOCKOUT PANEL DETAIL
3/4" = 1'-0"

PRELIMINARY - NOT FOR CONSTRUCTION

THE LANE GROUP
124 DEPOT AVENUE
CHILHOWIE, VA 24319
P: 276.646.2520 F: 276.646.2380

NO.	BY	CHK	APP
A			

2/27/15 LEVEL 2 DESIGN DOCUMENTS
DATE REVISIONS AND RECORD OF ISSUE

PW: C:\Users\hwilson\Documents\Bedford WTP_Hwilson.rvt
SW: SAVED: 2/27/2015 4:47:38 PM
PLOTTED:
USER:
XREF1:
XREF2:
XREF3:
XREF4:
DWG VER: A

BLACK & VEATCH
Building a world of difference.
Black & Veatch Corporation
Kansas City, Missouri

BEDFORD REGIONAL WATER AUTHORITY
SMITH MOUNTAIN LAKE WTP & LAKES
TO FOREST WATER LINE EXTENSION

ARCHITECTURAL
MEMBRANE/ADMIN BUILDING
ARCHITECTURAL STAND DETAILS

DESIGNED: DCC
DETAILED: AHW
CHECKED: DCC
APPROVED: Approver
DATE: Issue Date

0 1/2 1
IF THIS BAR DOES NOT MEASURE 1" THEN DRAWING IS NOT TO FULL SCALE

CHA PROJECT NO.
000000

A-00-002

D7000

GENERAL ARCHITECTURAL NOTES:

1. UNLESS OTHERWISE NOTED, ALL DIMENSIONS ARE CLEAR DIMENSIONS.

2. THE INTENT OF THE CONTRACT DOCUMENTS IS TO INCLUDE ALL WORK AND ITEMS REQUIRED FOR THE COMPLETION OF THAT WORK. ALL WORK LISTED, SHOWN, OR IMPLIED ON THE CONSTRUCTION DOCUMENTS SHALL BE PROVIDED BY THE CONTRACTOR; AS IT IS REASONABLE TO INFER THE WORK AS NECESSARY TO PROVIDE THE INTENDED RESULT. THE USE OF THE WORD "PROVIDED" IN CONNECTION WITH ANY ITEM SHOWN SHALL MEAN "FURNISHED, INSTALLED, AND CONNECTED," UNLESS NOTED OTHERWISE.

3. CONTRACTOR SHALL BE RESPONSIBLE FOR COORDINATION OF CONSTRUCTION DOCUMENTS AND SHOP DRAWINGS. CONTRACTOR SHALL NOTIFY ARCHITECT IN WRITING, IMMEDIATELY, OF ANY DISCREPANCIES IN PLANS, SHOP DRAWINGS, AND/OR SPECIFICATION. SHOULD A DISCREPANCY BE FOUND, DO NOT PROCEED UNTIL CLARIFICATIONS HAVE BEEN MADE BY THE ARCHITECT/ENGINEER.

4. CONTRACTOR SHALL FIELD VERIFY ALL DIMENSIONS AND FIELD CONDITIONS; DO NOT SCALE DRAWINGS. IF INSUFFICIENT INFORMATION EXISTS, NOTIFY THE ARCHITECT/ENGINEER IMMEDIATELY FOR CLARIFICATION PRIOR TO PROCEEDING WITH THE WORK.

5. ITEMS MARKED "NIC" ARE "NOT IN CONTRACT". SUCH ITEMS ARE INCLUDED IN THE DOCUMENTS AND REQUIRE CONTRACTOR COORDINATION FOR CONSTRUCTION.

6. DETAILS MARKED "TYPICAL" OR "TYP" SHALL APPLY IN ALL CASES UNLESS OTHERWISE NOTED.

7. ALL ITEMS SHOWN ON DRAWINGS SHALL BE ASSUMED TO BE NEW WORK UNLESS NOTED AS EXISTING.

8. MATERIAL HATCHES ARE FOR MATERIAL IDENTIFICATION PURPOSES ONLY. HATCHES ARE NOT TO BE USED FOR MATERIAL QUANTIFICATION.

ABBREVIATIONS (SEE OTHER SHEETS FOR DETAIL-SPECIFIC ABBREVIATIONS)

AFF	ABOVE FINISHED FLOOR
AHU	AIR HANDLING UNIT
ALUM	ALUMINUM
APPROX	APPROXIMATE
ASSOC	ASSOCIATED
BTWN	BETWEEN
CLR	CLEAR
CMU	CONCRETE MASONRY UNIT
CONC	CONCRETE
CONT	CONTINUOUS
CT	CERAMIC TILE
DIA	DIAMETER
DIM	DIMENSION
DWG	DRAWING
EA	EACH
ELEC	ELECTRICAL
EQ	EQUAL
EXIST	EXISTING
FD	FLOOR DRAIN
FEC	FIRE EXTINGUISHER CABINET
FE	FIRE EXTINGUISHER
FIN	FINISH, FINISHED
FRP	FIBERGLASS REINFORCED PLASTIC
FV	FIELD VERIFY
GEN	GENERAL
GWB	GYPSUM WALL BOARD
HDPE	HIGH DENSITY POLYETHYLENE
HDW	HARDWARE
HM	HOLLOW METAL
IHM	INSULATED HOLLOW METAL
INSUL	INSULATION
JAN	JANITOR
MAS	MASONRY
MAX	MAXIMUM
MECH	MECHANICAL
MFR	MANUFACTURER
MIN	MINIMUM
MR	MOISTURE RESISTANT
MTL	METAL, MATERIAL
NIC	NOT IN CONTRACT
OC	ON CENTER
OPP	OPPOSITE
PEMB	PRE-ENGINEERED METAL BUILDING
PTD	PAINT, PAINTED
PT	PRESSURE TREATED
RC	ROOF CAP
RS	ROLLED STEEL
SATC	SUSPENDED ACOUSTICAL TILE CEILING
SIM	SIMILAR
STOR	STORAGE
STRUCT	STRUCTURAL
TOM	TOP OF MASONRY
T/SLAB	TOP OF SLAB
TYP	TYPICAL
UNO	UNLESS NOTED OTHERWISE
VTR	VENT THROUGH ROOF
WD	WOOD

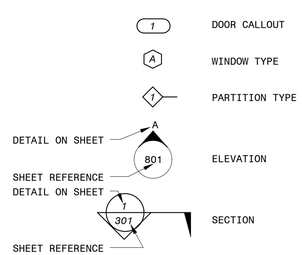

2 SYMBOLS LEGEND
1/8" = 1'-0"

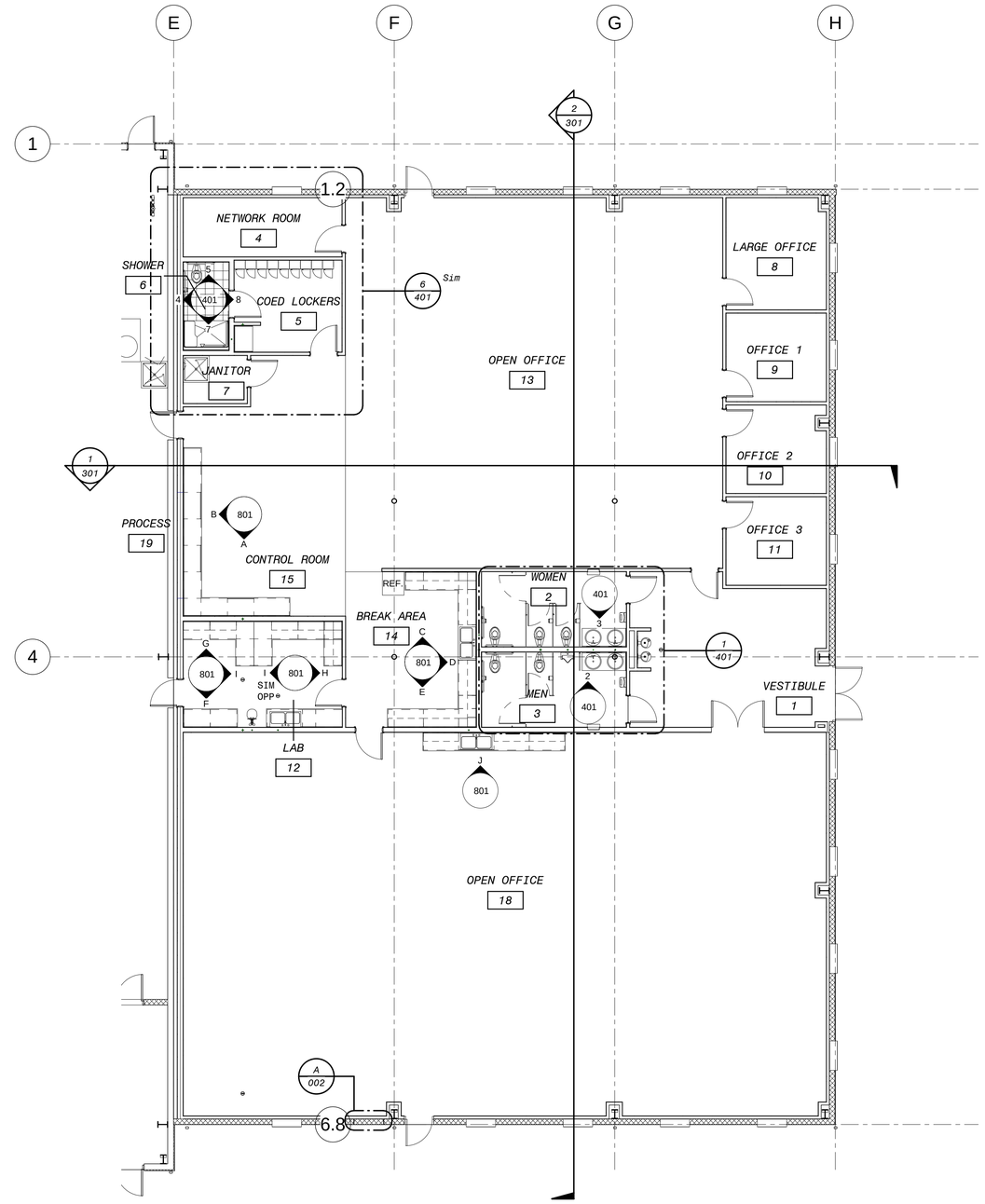

1 PARTIAL DETAIL REFERENCES PLAN
1/8" = 1'-0"

PRELIMINARY - NOT FOR CONSTRUCTION

THE LANE GROUP
124 DEPOT AVENUE
CHILHOWIE, VA 24319
P: 276.646.2520 F: 276.646.2380

DATE	REVISIONS AND RECORD OF ISSUE	NO.	BY	CHK	APP

PW: C:\Users\hwilson\Documents\Bedford WTP_Hwilson.rvt
SW: XREF1:
SAVED: 2/27/2015 4:48:01 PM XREF2:
PLOTTED: XREF3:
USER: DWG VER: XREF4:

BLACK & VEATCH
Building a world of difference.
Black & Veatch Corporation
Kansas City, Missouri

BEDFORD REGIONAL WATER AUTHORITY
SMITH MOUNTAIN LAKE WTP & LAKES
TO FOREST WATER LINE EXTENSION

PARTIAL DETAIL REFERENCES PLAN

DESIGNED: DCC
DETAILED: AHW
CHECKED: DCC
APPROVED: Approver
DATE: Issue Date

0 1/2 1
IF THIS BAR DOES NOT MEASURE 1" THEN DRAWING IS NOT TO FULL SCALE

CHA PROJECT NO.
000000

A-30-101

D7000

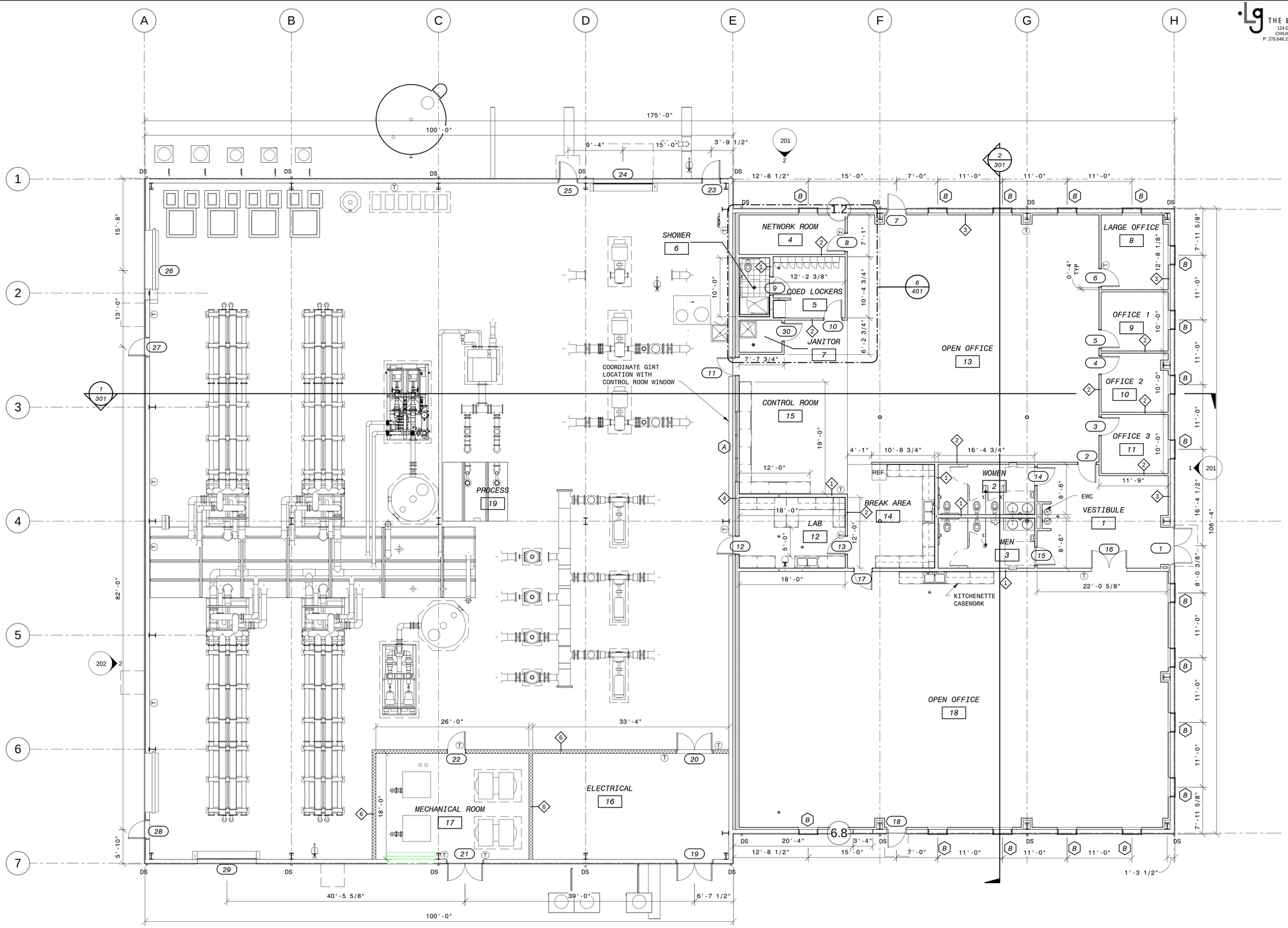

1 FLOOR PLAN
1/8" = 1'-0"

PRELIMINARY - NOT FOR CONSTRUCTION

THE LANE GROUP
124 DEPOT AVENUE
CHILHOWIE, VA 24319
P: 276.646.2520 F: 276.646.2380

NO.	BY	CHK	APP
A			

DATE	REVISIONS AND RECORD OF ISSUE
2/27/15	LEVEL 2 DESIGN DOCUMENTS

PW: C:\Users\hwilson\Documents\Bedford WTP_Mod Lsom.rvt
SW: XREF1:
SAVED: 2/27/2015 4:48:13 PM XREF2:
PLOTTED: XREF3:
USER: DWG VER: A XREF4:

BLACK & VEATCH
Building a world of difference.
Black & Veatch Corporation
Kansas City, Missouri

BEDFORD REGIONAL WATER AUTHORITY
SMITH MOUNTAIN LAKE WTP & LAKES TO FOREST WATER LINE EXTENSION
ARCHITECTURAL MEMBRANE/ADMIN BUILDING OPERATING FLOOR PLAN

DESIGNED: DCC
DETAILED: AHW
CHECKED: DCC
APPROVED: ---
DATE: Issue Date

0 1/2 1
IF THIS BAR DOES NOT MEASURE 1" THEN DRAWING IS NOT TO FULL SCALE

CHA PROJECT NO.
000000

A-30-102

D7000

THE LANE GROUP
124 DEPOT AVENUE
CHILHOWIE, VA 24319
P: 276.646.2520 F: 276.646.2380

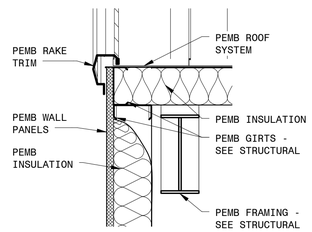

5 RAKE DETAIL
3/4" = 1'-0"

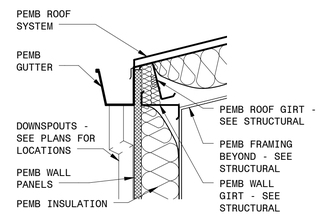

4 EAVE DETAIL
3/4" = 1'-0"

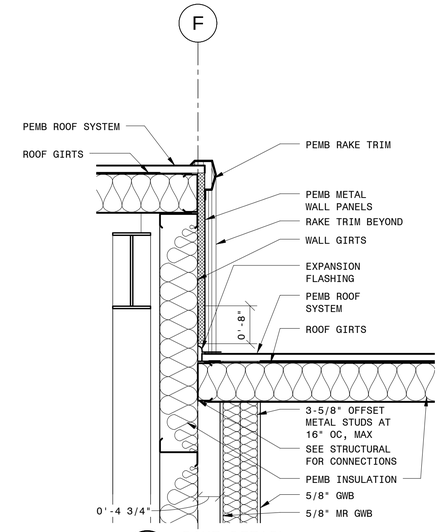

3 RAKE DETAIL
3/4" = 1'-0"

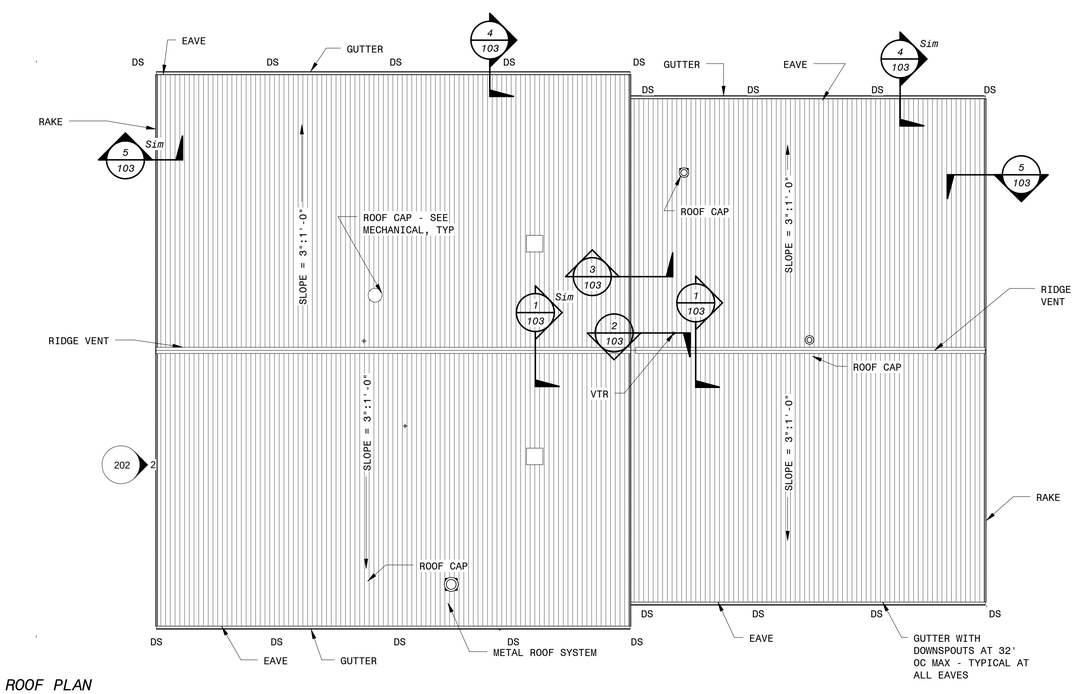

A ROOF PLAN
1/16" = 1'-0"

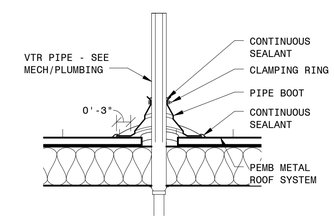

2 VTR DETAIL
3/4" = 1'-0"

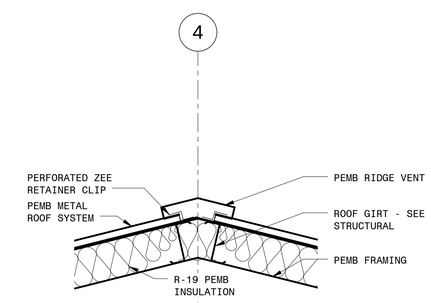

1 RIDGE VENT DETAIL
3/4" = 1'-0"

PRELIMINARY - NOT FOR CONSTRUCTION

NO.	BY	CHK	APP
A			

DATE	REVISIONS AND RECORD OF ISSUE
2/27/15	LEVEL 2 DESIGN DOCUMENTS

PW: C:\Users\hwilson\Documents\Bedford WTP_Mod_Lanv.pwt
SW: XREF1:
SAVED: 2/27/2015 4:48:22 PM XREF2:
PLOTTED: XREF3:
USER: DWG VER: A XREF4:

BLACK & VEATCH
Building a world of difference.
Black & Veatch Corporation
Kansas City, Missouri

BEDFORD REGIONAL WATER AUTHORITY
SMITH MOUNTAIN LAKE WTP & LAKES TO FOREST WATER LINE EXTENSION
ARCHITECTURAL
MEMBRANE/ADMIN BUILDING ROOF PLAN

DESIGNED: DCC
DETAILED: AHW
CHECKED: DCC
APPROVED: Approver
DATE: Issue Date

0 1/2 1
IF THIS BAR DOES NOT MEASURE 1" THEN DRAWING IS NOT TO FULL SCALE

CHA PROJECT NO.
000000

A-30-103

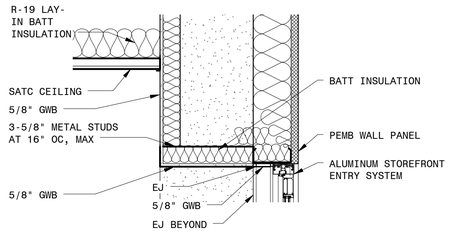

4 BULKHEAD DETAIL AT ENTRY DOOR
3/4" = 1'-0"

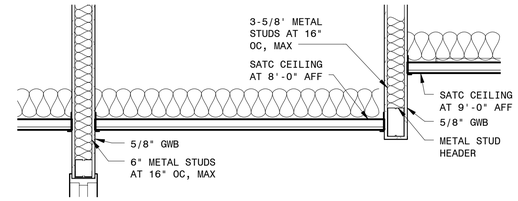

3 VESTIBULE BULKHEAD DETAIL
3/4" = 1'-0"

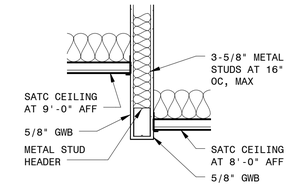

2 BULKHEAD DETAIL
3/4" = 1'-0"

1 REFLECTED CEILING PLAN
1/8" = 1'-0"

PRELIMINARY - NOT FOR CONSTRUCTION

THE LANE GROUP
124 DEPOT AVENUE
CHILHOWIE, VA 24319
P: 276.646.2520 F: 276.646.2380

DATE	REVISIONS AND RECORD OF ISSUE	NO.	BY	CHK	APP
2/27/15	LEVEL 2 DESIGN DOCUMENTS	A			

PW: C:\Users\tmwilson\Documents\Bedford WTP_Mod Lsom.rvt
SW: XREF1:
SAVED: 2/27/2015 4:48:28 PM XREF2:
PLOTTED: XREF3:
USER: DWG VER: A XREF4:

BLACK & VEATCH
Building a world of difference.
Black & Veatch Corporation
Kansas City, Missouri

BEDFORD REGIONAL WATER AUTHORITY
SMITH MOUNTAIN LAKE WTP & LAKES
TO FOREST WATER LINE EXTENSION

ARCHITECTURAL
MEMBRANE/ADMIN BUILDING
REFLECTED CEILING PLAN

DESIGNED: DCC
DETAILED: AHW
CHECKED: DCC
APPROVED: Approver
DATE: Issue Date

0 1/2 1
IF THIS BAR DOES NOT MEASURE 1" THEN DRAWING IS NOT TO FULL SCALE

CHA PROJECT NO.
000000

A-30-104

D7000

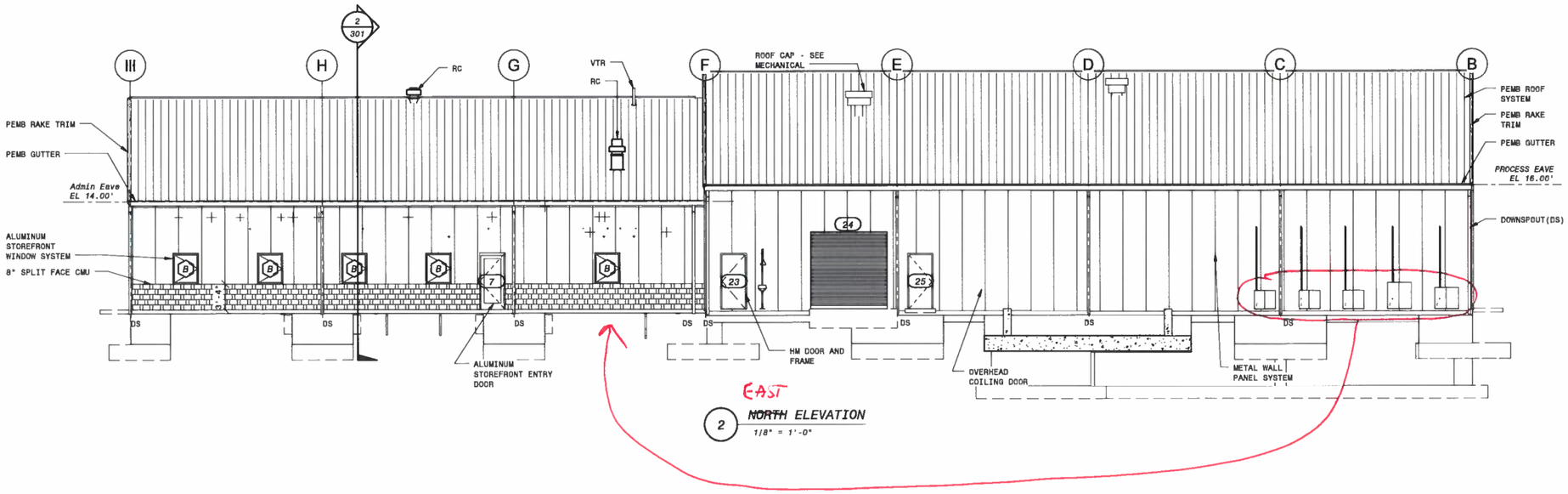

EAST

2 ~~NORTH~~ ELEVATION

1/8" = 1'-0"

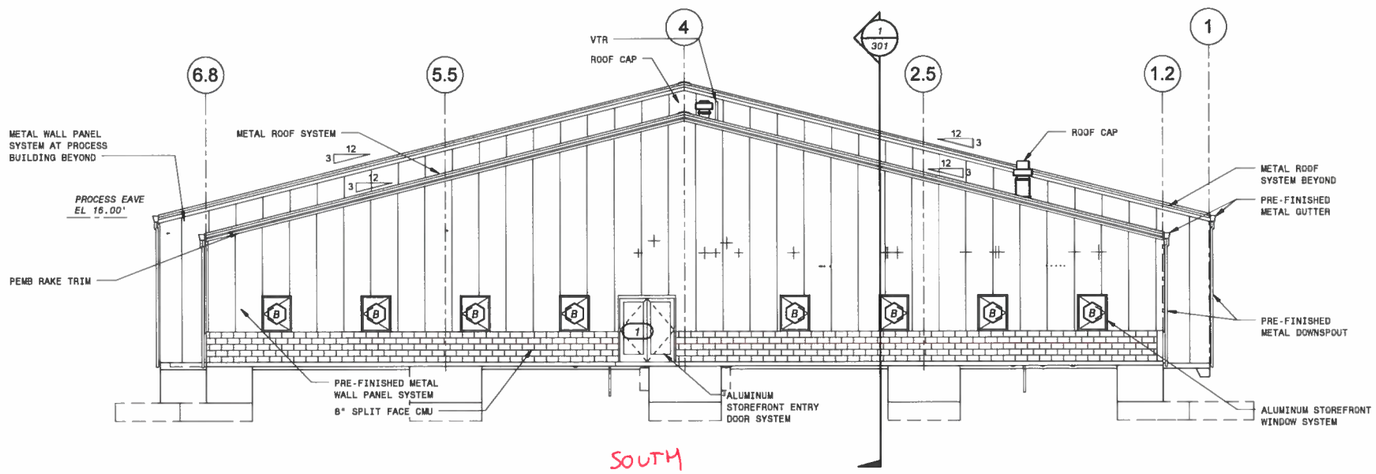

SOUTH

1 ~~EAST~~ ELEVATION

1/8" = 1'-0"

PRELIMINARY - NOT FOR CONSTRUCTION

THE LANE GROUP
124 DEPOT AVENUE
CHILHOWIE, VA 24319
P: 276.646.2538 F: 276.646.2380

NO.	BY	CHK	APP
A			

LEVEL 2 DESIGN DOCUMENTS

REVISIONS AND RECORD OF ISSUE

DATE: 2/27/15

PW: C:\Users\hwilson\Documents\Bedford WTP_hwilson.rvt

SW: XREF1:

SAVED: 2/27/2015 4:48:33 PM XREF2:

PLOTTED: XREF3:

USER: XREF4:

DWG VER: A

BLACK & VEATCH
Building a world of difference.
Black & Veatch Corporation
Kansas City, Missouri

BEDFORD REGIONAL WATER AUTHORITY
SMITH MOUNTAIN LAKE WTP & LAKES TO FOREST WATER LINE EXTENSION

ARCHITECTURAL
MEMBRANE/ADMIN BUILDING
BUILDING ELEVATIONS

DESIGNED: DCC
DETAILED: AHW
CHECKED: DCC
APPROVED: ---
DATE: Issue Date

0 1/2 1
IF THIS BAR DOES NOT MEASURE 1" THEN DRAWING IS NOT TO FULL SCALE

CHA PROJECT NO.
000000

A-30-201

37303

THE LANE GROUP
124 DEPOT AVENUE
CHILHOWIE, VA 24319
P: 276.646.2520 F: 276.646.2383

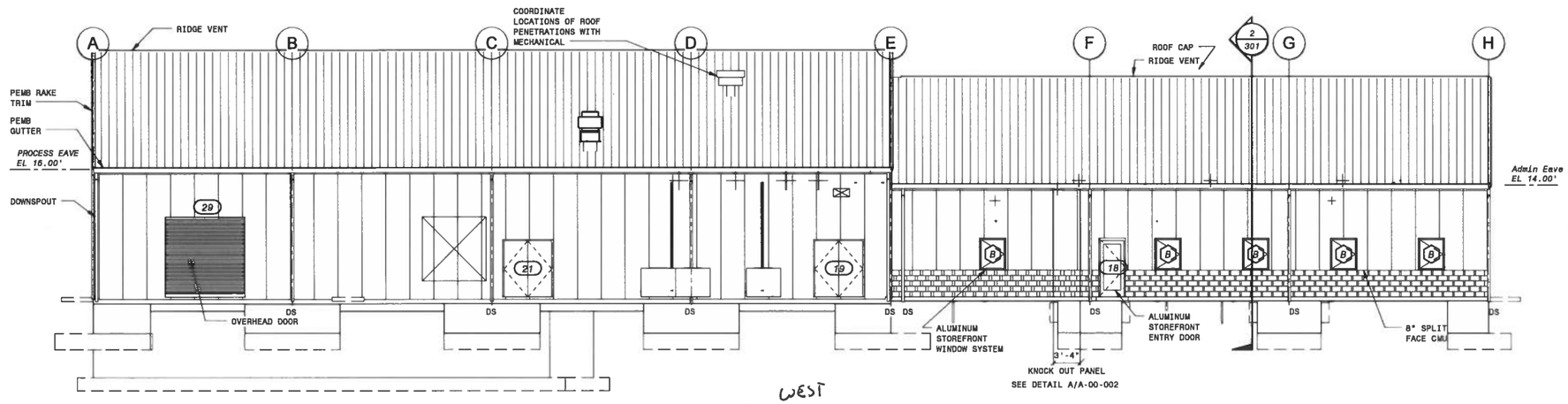

1 WEST ~~SOUTH~~ ELEVATION
1/8" = 1'-0"

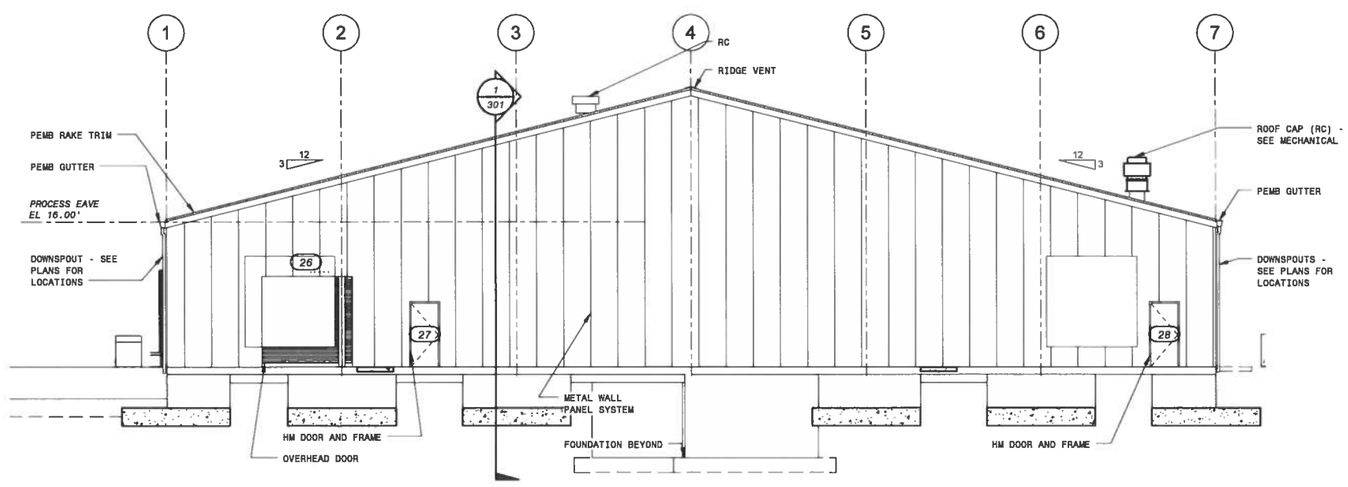

2 NORTH ~~WEST~~ ELEVATION
1/8" = 1'-0"

PRELIMINARY - NOT FOR CONSTRUCTION

NO.	BY	CHK	APP
A			

DATE	REVISIONS AND RECORD OF ISSUE
2/27/15	LEVEL 2 DESIGN DOCUMENTS

PW: C:\Users\bwilson\Documents\Bedford WTP_bwilson.rvt
SW:
SAVED: 2/27/2015 4:48:37 PM
PLOTTED:
USER:
XREF1:
XREF2:
XREF3:
XREF4:
DWG VER: A

BLACK & VEATCH
Building a world of difference.
Black & Veatch Corporation
Kansas City, Missouri

BEDFORD REGIONAL WATER AUTHORITY
SMITH MOUNTAIN LAKE WTP & LAKES TO FOREST WATER LINE EXTENSION

ARCHITECTURAL
MEMBRANE/ADMIN BUILDING
BUILDING ELEVATIONS

DESIGNED: DCC
DETAILED: AHW
CHECKED: DCC
APPROVED: Approver
DATE: Issue Date

0 1/2 1
IF THIS BAR DOES NOT MEASURE 1" THEN DRAWING IS NOT TO FULL SCALE

CHA PROJECT NO.
000000

A-30-202

D7000

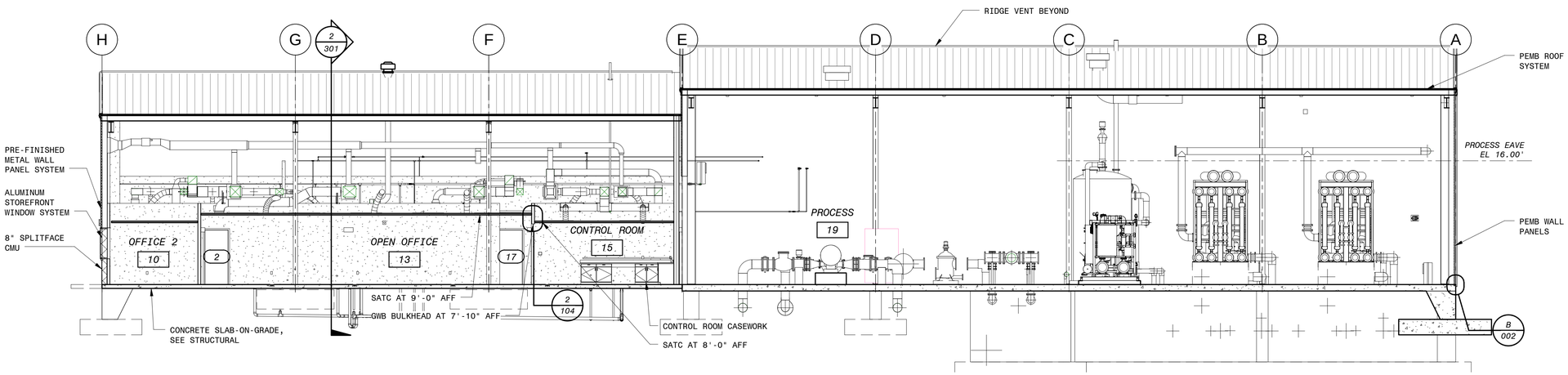

1 Section 1
1/8" = 1'-0"

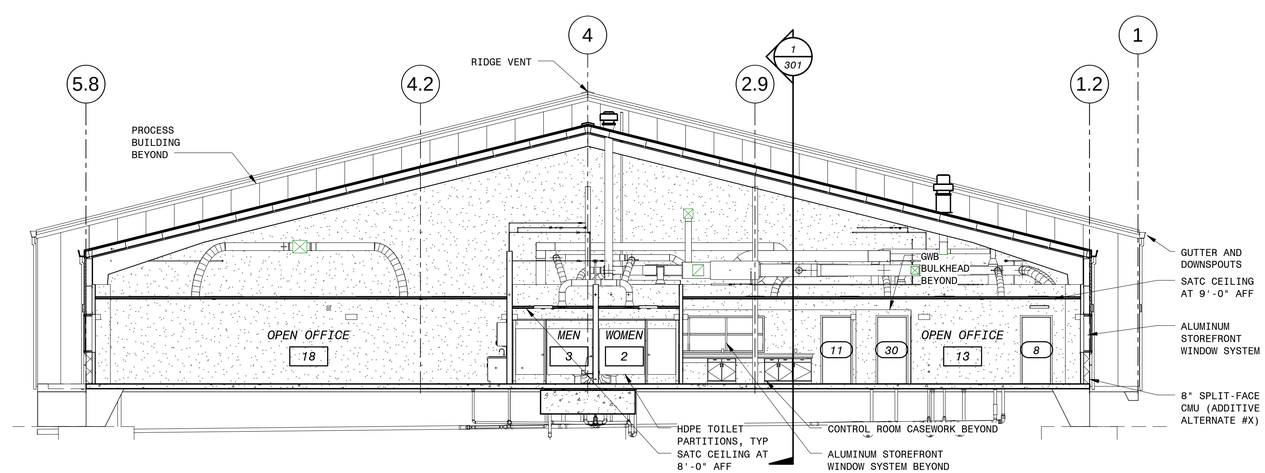

2 Section 2
1/8" = 1'-0"

PRELIMINARY - NOT FOR CONSTRUCTION

THE LANE GROUP
124 DEPOT AVENUE
CHILHOWIE, VA 24319
P: 276.646.2520 F: 276.646.2380

NO.	BY	CHK	APP
A			

DATE	REVISIONS AND RECORD OF ISSUE
2/27/15	LEVEL 2 DESIGN DOCUMENTS

PW: C:\Users\hwilson\Documents\Bedford WTP_hwilson.rvt
SW:
SAVED: 2/27/2015 4:49:03 PM
PLOTTED:
USER:
XREF1:
XREF2:
XREF3:
XREF4:
DWG VER: A

BLACK & VEATCH
Building a world of difference
Black & Veatch Corporation
Kansas City, Missouri

BEDFORD REGIONAL WATER AUTHORITY
SMITH MOUNTAIN LAKE WTP & LAKES
TO FOREST WATER LINE EXTENSION

ARCHITECTURAL
MEMBRANE/ADMIN BUILDING
BUILDING SECTIONS

DESIGNED: DCC
DETAILED: AHW
CHECKED: DCC
APPROVED: ---
DATE: Issue Date

0 1/2 1
IF THIS BAR DOES NOT MEASURE 1" THEN DRAWING IS NOT TO FULL SCALE

CHA PROJECT NO.
000000

A-30-301

D7000

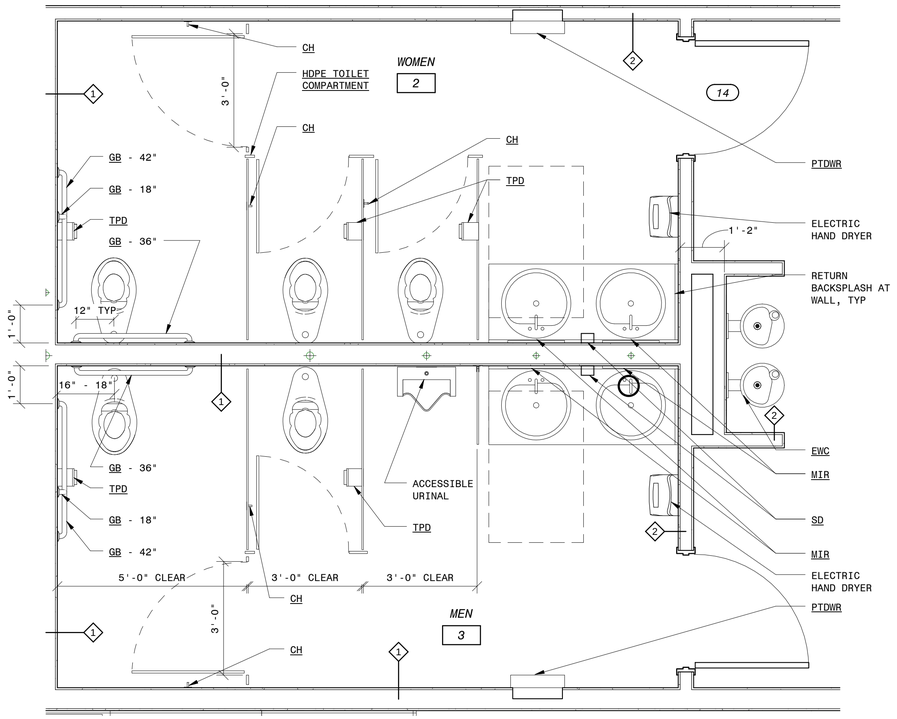

1 ENLARGED TOILET PLAN
1/2" = 1'-0"

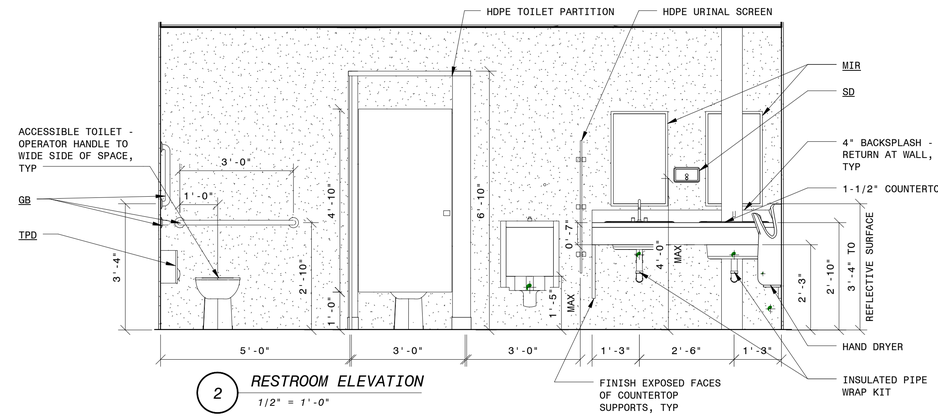

2 RESTROOM ELEVATION
1/2" = 1'-0"

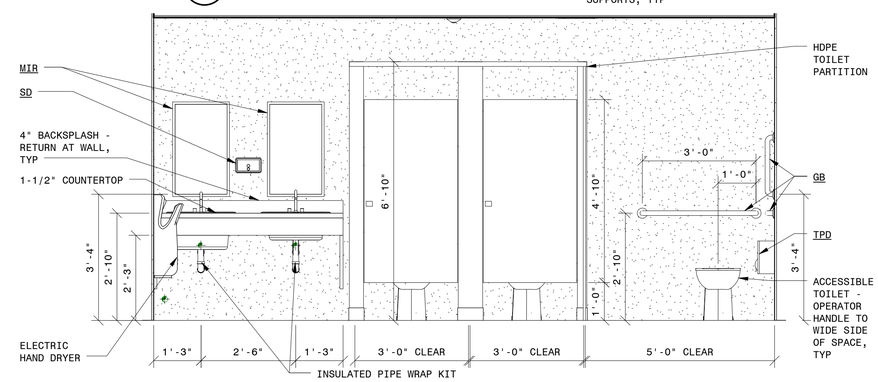

3 RESTROOM ELEVATION
1/2" = 1'-0"

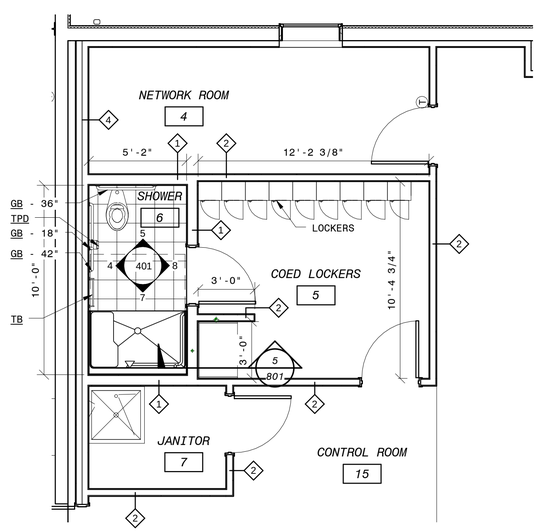

6 ENLARGED PLAN
1/4" = 1'-0"

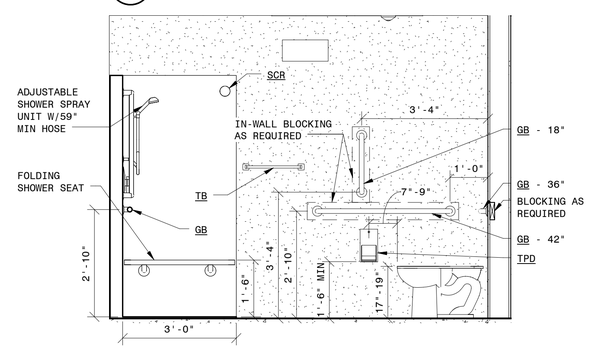

4 BATHROOM ELEVATION 4
1/2" = 1'-0"

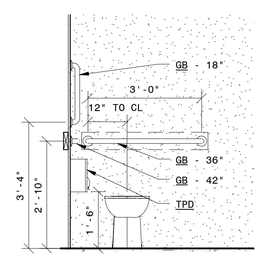

5 BATHROOM ELEVATION 5
1/2" = 1'-0"

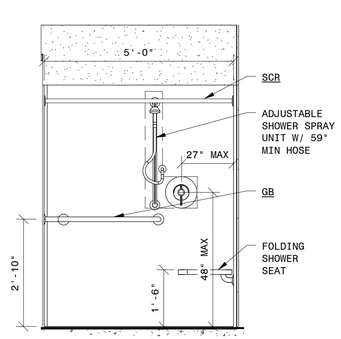

7 SHOWER ELEVATION 7
1/2" = 1'-0"

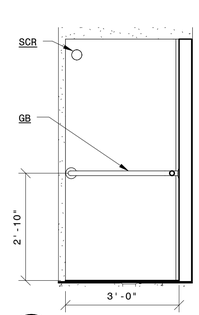

8 SHOWER ELEVATION 8
1/2" = 1'-0"

TOILET AND BATH ACCESSORIES LEGEND

CH	COAT HOOK (48" AFF, MAX)
EWC UNIT	ELECTRIC WATER COOLER - HI/LO ACCESSIBLE
GB - 18"	GRAB BAR
GB - 36"	GRAB BAR
GB - 42"	GRAB BAR
MIR	MIRROR - 40" AFF TO REFLECTIVE SURFACE
PTD	PAPER TOWEL DISPENSER (48" AFF, MAX)
PTDWR	PAPER TOWEL DISPENSER/WASTE RECEPTACLE
SD	SOAP DISPENSER (48" AFF, MAX)
SCR	SHOWER CURTAIN ROD

TOILET AND BATH ACCESSORIES LEGEND - CONTINUED

TB	TOWEL BAR - 18" (48" AFF, MAX)
TPD	TOILET PAPER DISPENSER

PRELIMINARY - NOT FOR CONSTRUCTION

THE LANE GROUP
124 DEPOT AVENUE
CHILHOWIE, VA 24319
P: 276.646.2520 F: 276.646.2380

NO.	BY	CHK	APP
A			

2/27/15 LEVEL 2 DESIGN DOCUMENTS
DATE REVISIONS AND RECORD OF ISSUE

PW: C:\Users\hwilson\Documents\Bedford WTP_Rev1.dgn
SW: XREF1:
SAVED: 2/27/2015 4:49:11 PM XREF2:
PLOTTED: XREF3:
USER: DWG VER: A XREF4:

BLACK & VEATCH
Building a world of difference.
Black & Veatch Corporation
Kansas City, Missouri

BEDFORD REGIONAL WATER AUTHORITY
SMITH MOUNTAIN LAKE WTP & LAKES
TO FOREST WATER LINE EXTENSION

ARCHITECTURAL
MEMBRANE/ADMIN BUILDING
TOILET PLANS AND ELEVATIONS

DESIGNED: DCC
DETAILED: AHW
CHECKED: DCC
APPROVED: Approver
DATE: Issue Date

0 1/2 1
IF THIS BAR DOES NOT MEASURE 1" THEN DRAWING IS NOT TO FULL SCALE

CHA PROJECT NO.
000000

A-30-401

D7000

DOOR SCHEDULE

No. (D)	DOOR SIZE WIDTH	DOOR SIZE HEIGHT	DOOR MATERIAL	DOOR HEAD	DOOR JAMB	DOOR SILL	DOOR TYPE (D)	DOOR HDWR	RATING	FRAME MATERIAL	FRAME DEPTH	REMARKS	FROM ROOM No.	TO ROOM No.
1	3'-0"	7'-0"	ALUM	4	D		D	1		ALUM	0'-5 3/4"		1	
2	3'-0"	7'-0"	HM	5	E		B	2		HM	0'-5 3/4"		1	13
3	3'-0"	7'-0"	HM	5	E		A	3		HM	0'-5 3/4"		13	11
4	3'-0"	7'-0"	HM	5	E		A	3		HM	0'-5 3/4"		13	10
5	3'-0"	7'-0"	HM	5	E		A	3		HM	0'-5 3/4"		9	13
6	3'-0"	7'-0"	HM	5	E		A	3		HM	0'-5 3/4"		8	13
7	3'-0"	7'-0"	ALUM	2	B		D	1A		ALUM	0'-5 3/4"		13	
8	3'-0"	7'-0"	HM	5	E		A	4		HM	0'-5 3/4"		13	4
9	3'-0"	7'-0"	HM	1	A		A	5		HM	0'-5 3/4"		6	5
10	3'-0"	7'-0"	HM	5	E		A	2		HM	0'-5 3/4"		15	5
11	3'-0"	7'-0"	IHM				B	2		HM	0'-5 3/4"	INSUL GLAZING	15	19
12	3'-0"	7'-0"	IHM				B	2		HM	0'-5 3/4"	INSUL GLAZING	12	19
13	3'-0"	7'-0"	HM	5	E		B	3		HM	0'-5 3/4"		12	14
14	3'-0"	7'-0"	HM	1	A		A	2		HM	0'-5 3/4"		2	1
15	3'-0"	7'-0"	HM	1	A		A	2		HM	0'-5 3/4"		1	3
16	6'-0"	7'-0"	HM	1	A		A	1		ALUM	0'-5 3/4"		18	1
17	3'-0"	7'-0"	HM	1	A		A	4		HM	0'-5 3/4"		18	14
18	3'-0"	7'-0"	ALUM	2	B		D	1A		ALUM	0'-5 3/4"			18
19	6'-0"	7'-0"	IHM	6	F	-	A	6		HM	0'-5 3/4"		16	
20	6'-0"	10'-0"	HM	3	C	-	A	6		HM	0'-5 3/4"		16	19
21	6'-0"	7'-0"	IHM	6	F	-	A	7		HM	0'-5 3/4"	INSUL GLAZING	17	
22	3'-0"	7'-0"	IHM	3	C				45 MIN		0'-5 3/4"		17	19
23	3'-0"	7'-0"	FRP	6	F		C	4		FRP	0'-5 3/4"	INSUL GLAZING	19	
24	10'-0"	10'-0"	RS	7	G									
25	3'-0"	7'-0"	IHM	6	F	-	C	7		HM	0'-5 3/4"	INSUL GLAZING	19	
26	10'-0"	10'-0"	RS	7	G									
27	3'-0"	7'-0"	IHM	6	F	-	C	7	45 MIN	HM	0'-5 3/4"		19	
28	3'-0"	7'-0"	IHM	6	F	-	C	7	45 MIN	HM	0'-5 3/4"		19	
29	10'-0"	10'-0"	RS	7	G									
30	3'-0"	7'-0"	HM	5	E		A	4		HM	0'-5 3/4"		7	15

DOOR SCHEDULE ABBREVIATIONS

ALUM	ALUMINUM
FRP	FIBERGLASS REINFORCED PLASTIC
HDWR	HARDWARE
HM	HOLLOW METAL
IHM	INSULATED HOLLOW METAL
INSUL	INSULATED
NO.	NUMBER
RS	ROLLING STEEL

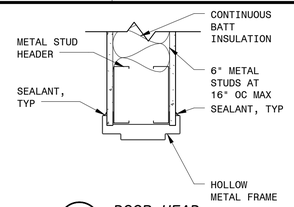

1 DOOR HEAD
1 1/2" = 1'-0"

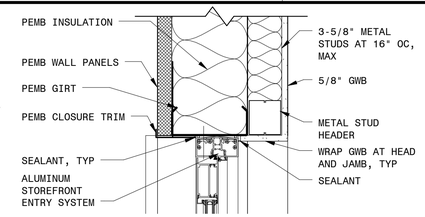

2 DOOR HEAD
1 1/2" = 1'-0"

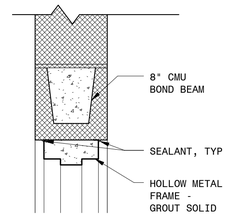

3 DOOR HEAD
1 1/2" = 1'-0"

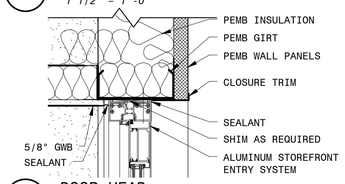

4 DOOR HEAD
1 1/2" = 1'-0"

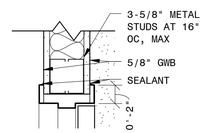

5 DOOR HEAD
1 1/2" = 1'-0"

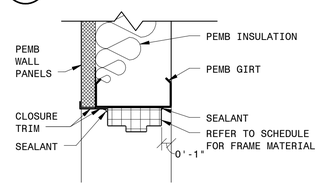

6 DOOR HEAD
1 1/2" = 1'-0"

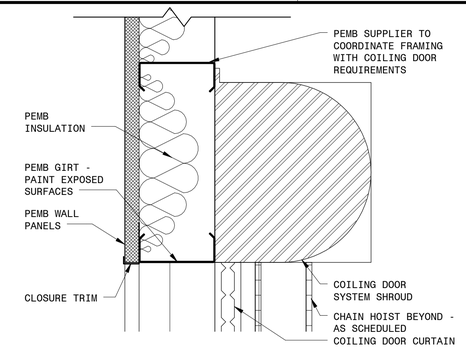

7 DOOR HEAD
1 1/2" = 1'-0"

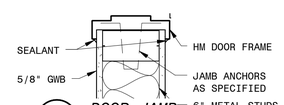

A DOOR JAMB
1 1/2" = 1'-0"

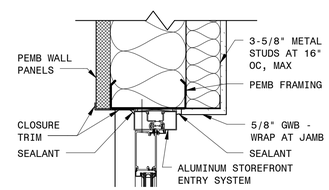

B DOOR JAMB
1 1/2" = 1'-0"

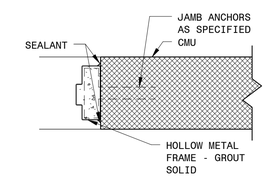

C DOOR JAMB
1 1/2" = 1'-0"

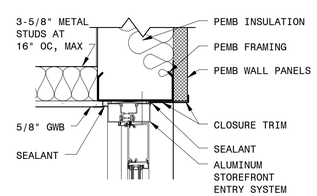

D DOOR JAMB
1 1/2" = 1'-0"

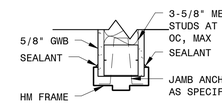

E DOOR JAMB
1 1/2" = 1'-0"

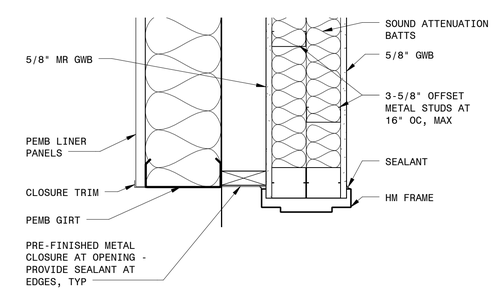

F DOOR JAMB
1 1/2" = 1'-0"

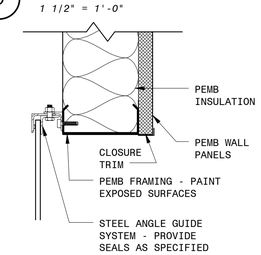

G DOOR JAMB
1 1/2" = 1'-0"

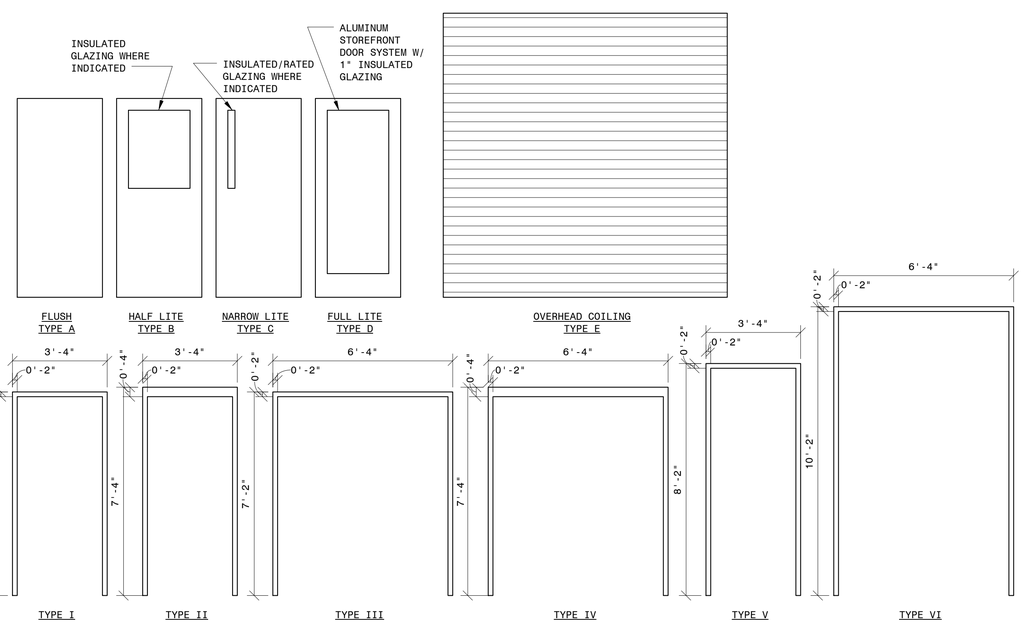

AA DOOR AND FRAME ELEVATIONS
3/8" = 1'-0"

PRELIMINARY - NOT FOR CONSTRUCTION

THE LANE GROUP
124 DEPOT AVENUE
CHILHOWIE, VA 24319
P: 276.646.2520 F: 276.646.2380

NO.	BY	CHK	APP
A			

2/27/15 LEVEL 2 DESIGN DOCUMENTS
DATE REVISIONS AND RECORD OF ISSUE

PW: C:\Users\hwilson\Documents\Bedford WTP_hwilson.pwt
SW: XREF1:
SAVED: 2/27/2015 4:49:20 PM XREF2:
PLOTTED: XREF3:
USER: DWG VER: A XREF4:

BLACK & VEATCH
Building a world of difference.
Black & Veatch Corporation
Kansas City, Missouri

BEDFORD REGIONAL WATER AUTHORITY
SMITH MOUNTAIN LAKE WTP & LAKES TO FOREST WATER LINE EXTENSION

ARCHITECTURAL
MEMBRANE/ADMIN BUILDING
DOOR SCHEDULE AND DETAILS

DESIGNED: DCC
DETAILED: AHW
CHECKED: DCC
APPROVED: ---
DATE: Issue Date

0 1/2 1
IF THIS BAR DOES NOT MEASURE 1" THEN DRAWING IS NOT TO FULL SCALE

CHA PROJECT NO.
000000

A-30-601

D7000

ROOM FINISH SCHEDULE									
		FLOOR	WALLS			CEILING			
ROOM No.	ROOM NAME	MATRL	MATRL	FINISH	BASE	MATRL	FINISH	Unbounded Height	REMARKS
1	VESTIBULE	VCT	GWB	PAINT	VINYL	SATC		9'-0"	2X2
2	WOMEN	VCT	GWB	PAINT	VINYL	SATC		8'-0"	2X2
3	MEN	VCT	GWB	PAINT	VINYL	SATC		8'-0"	2X2
4	NETWORK ROOM	VCT	GWB	PAINT	VINYL	SATC		8'-0"	2X2
5	COED LOCKERS	VCT	GWB	PAINT	VINYL	SATC		8'-0"	2X2
6	SHOWER	VCT	GWB	PAINT	VINYL	GWB	PAINT	8'-0"	
7	JANITOR	VCT	GWB	PAINT	VINYL	SATC		8'-0"	2X2
8	LARGE OFFICE	CARPET TILE	GWB	PAINT	VINYL	SATC		8'-0"	2X2
9	OFFICE 1	CARPET TILE	GWB	PAINT	VINYL	SATC		8'-0"	2X2
10	OFFICE 2	CARPET TILE	GWB	PAINT	VINYL	SATC		8'-0"	2X2
11	OFFICE 3	CARPET TILE	GWB	PAINT	VINYL	SATC		8'-0"	2X2
12	LAB	VCT	GWB	PAINT	VINYL	SATC		8'-0"	2X2
13	OPEN OFFICE	VCT	GWB	PAINT	VINYL	SATC		9'-0"	2X2
14	BREAK AREA	VCT	GWB	PAINT	VINYL	SATC		8'-0"	2X2
15	CONTROL ROOM	VCT	GWB	PAINT	VINYL	SATC		8'-0"	2X2
16	ELECTRICAL	CONC SEALED	CMU	PAINT	NONE	GWB	PAINT	12'-0"	
17	MECHANICAL ROOM	CONC SEALED	CMU	PAINT	NONE	SATC		12'-0"	
18	OPEN OFFICE	CARPET	GWB	PAINT	VINYL	SATC		9'-0"	2X2
19	PROCESS	CONC SEALED	--	--	NONE	OPEN	--	16'-0"	

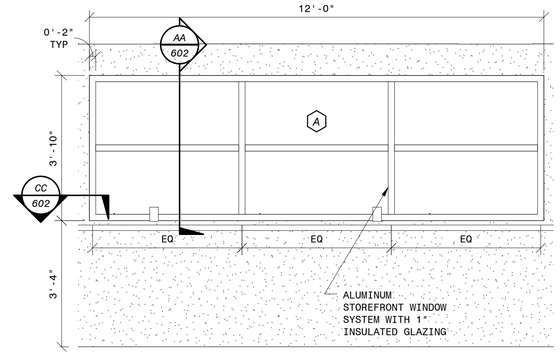

1 WINDOW TYPE A
1/2" = 1'-0"

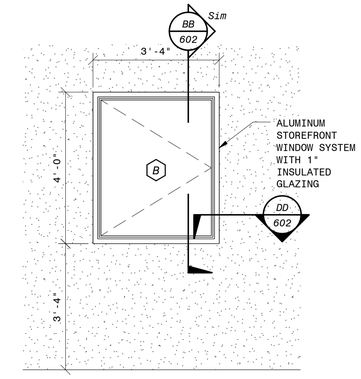

2 WINDOW TYPE B
1/2" = 1'-0"

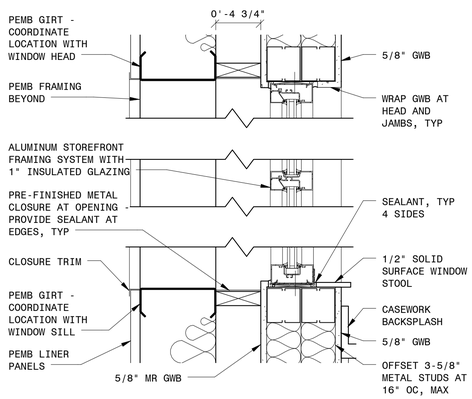

AA WINDOW HEAD/MUNTIN/SILL
1 1/2" = 1'-0"

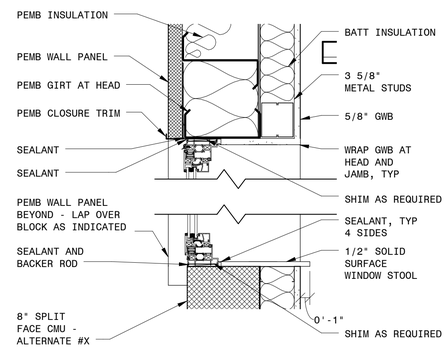

BB WINDOW HEAD/SILL
1 1/2" = 1'-0"

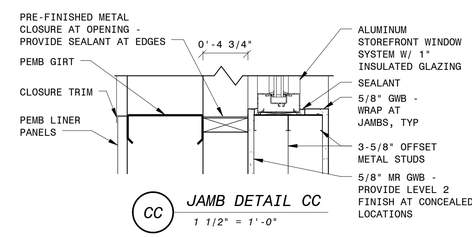

CC JAMB DETAIL CC
1 1/2" = 1'-0"

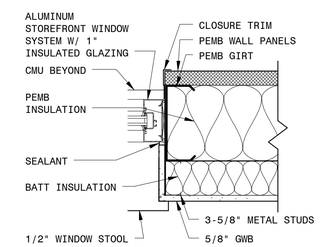

DD JAMB DETAIL DD
1 1/2" = 1'-0"

WINDOW SCHEDULE										
	TYPE	OPENING		WINDOW						
COUNT	(W)	WIDTH	HEIGHT	MATERIAL	HEAD	JAMB	MULL	SILL	GLASS	COMMENTS
1	A	12'-0"	3'-10"	ALUM	AA	CC	AA	AA	1" INSUL	
18	B	3'-4"	4'-0"							

PRELIMINARY - NOT FOR CONSTRUCTION

THE LANE GROUP
124 DEPOT AVENUE
CHILHOWIE, VA 24319
P: 276.646.2520 F: 276.646.2380

DATE	REVISIONS AND RECORD OF ISSUE	NO.	BY	CHK	APD

PW: C:\Users\hwilson\Documents\Bedford WTP_Hwilson.rvt
SW: SAVED: 2/27/2015 4:49:25 PM
PLOTTED:
USER:
XREF1:
XREF2:
XREF3:
XREF4:
DWG VER:

BLACK & VEATCH
Building a world of difference.
Black & Veatch Corporation
Kansas City, Missouri

BEDFORD REGIONAL WATER AUTHORITY
SMITH MOUNTAIN LAKE WTP & LAKES
TO FOREST WATER LINE EXTENSION

DESIGNED: DCC
DETAILED: AHW
CHECKED: DCC
APPROVED: Approver
DATE: Issue Date

0 1/2 1
IF THIS BAR DOES NOT MEASURE 1" THEN DRAWING IS NOT TO FULL SCALE

CHA PROJECT NO.
000000

A-30-602

D7000

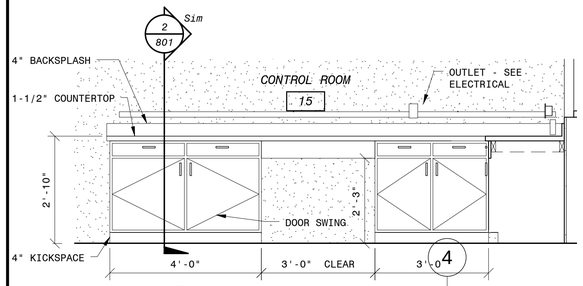

A CASEWORK ELEVATION A
1/2" = 1'-0"

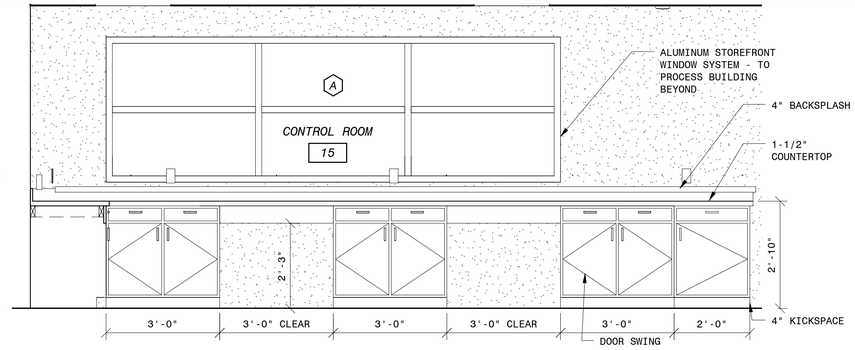

B CASEWORK ELEVATION B
1/2" = 1'-0"

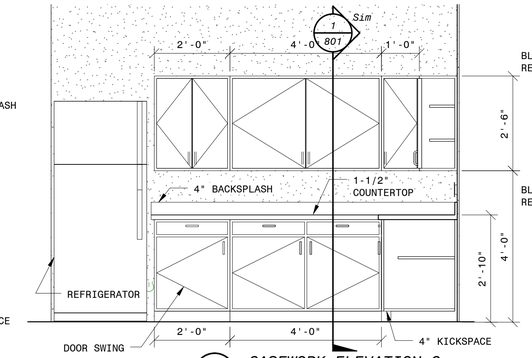

C CASEWORK ELEVATION C
1/2" = 1'-0"

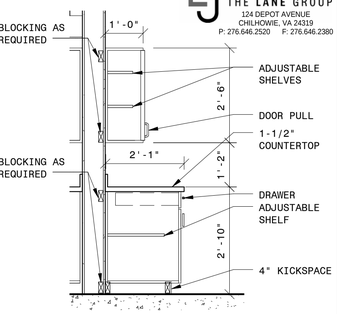

1 CASEWORK SECTION
1/2" = 1'-0"

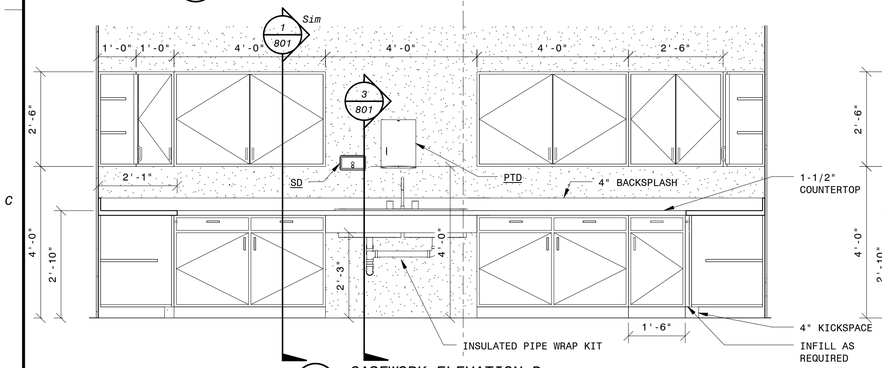

D CASEWORK ELEVATION D
1/2" = 1'-0"

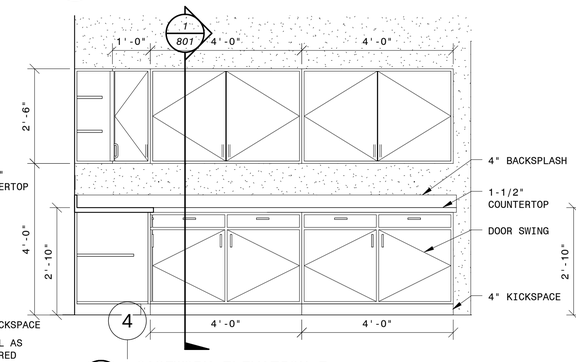

E CASEWORK ELEVATION E
1/2" = 1'-0"

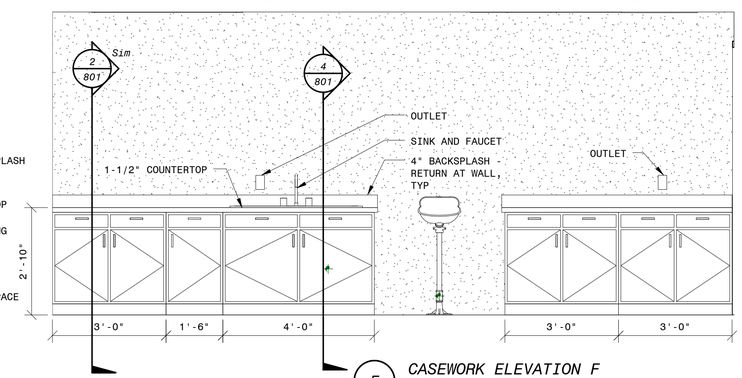

F CASEWORK ELEVATION F
1/2" = 1'-0"

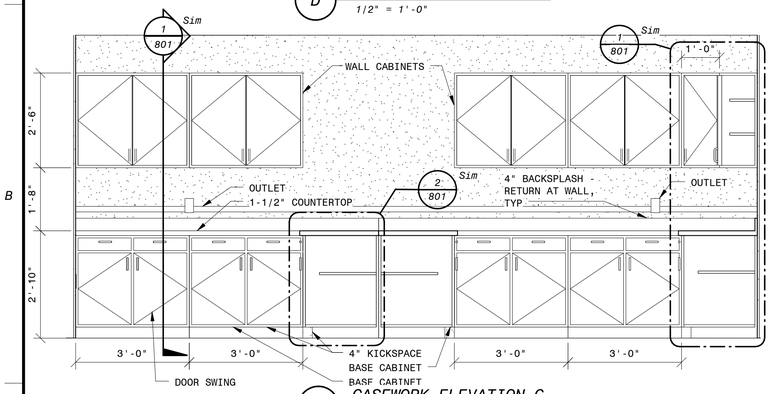

G CASEWORK ELEVATION G
1/2" = 1'-0"

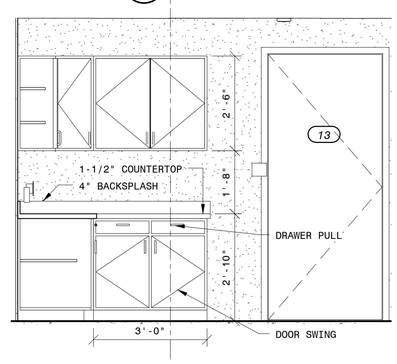

H CASEWORK ELEVATION H
1/2" = 1'-0"

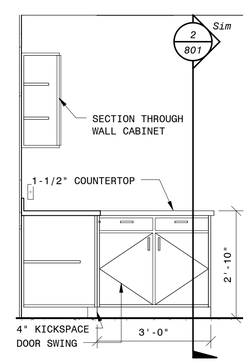

I CASEWORK ELEVATION I
1/2" = 1'-0"
ONE THUS, AND ONE OPPOSITE HAND

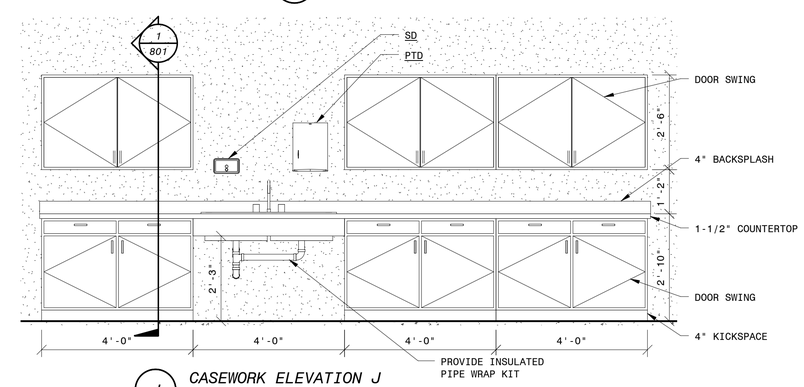

J CASEWORK ELEVATION J
1/2" = 1'-0"

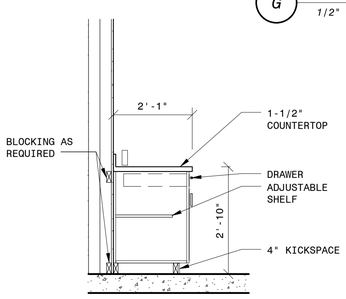

2 CASEWORK SECTION
1/2" = 1'-0"

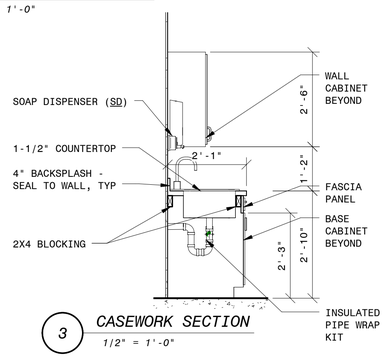

3 CASEWORK SECTION
1/2" = 1'-0"

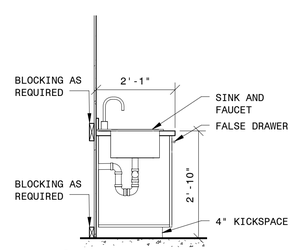

4 CASEWORK SECTION 4
1/2" = 1'-0"

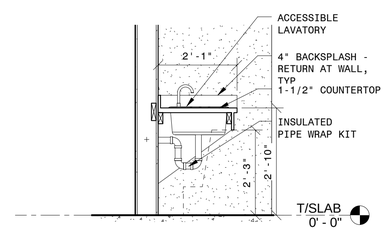

5 TYPICAL ACCESSIBLE LAVATORY SECTION
1/2" = 1'-0"

PRELIMINARY - NOT FOR CONSTRUCTION

THE LANE GROUP
124 DEPOT AVENUE
CHILHOWIE, VA 24319
P: 276.646.2520 F: 276.646.2380

NO.	BY	CHK	APP
A			

2/27/15 LEVEL 2 DESIGN DOCUMENTS
DATE REVISIONS AND RECORD OF ISSUE

PW: C:\Users\hwilson\Documents\Bedford WTP_Mod1.pwn.rvt
SW: XREF1:
SAVED: 2/27/2015 4:49:35 PM XREF2:
PLOTTED: XREF3:
USER: DWG VER: A XREF4:

BLACK & VEATCH
Building a world of difference.
Black & Veatch Corporation
Kansas City, Missouri

BEDFORD REGIONAL WATER AUTHORITY
SMITH MOUNTAIN LAKE WTP & LAKES
TO FOREST WATER LINE EXTENSION

ARCHITECTURAL
MEMBRANE/ADMIN BUILDING
CASEWORK ELEVATIONS AND DETAILS

DESIGNED: DCC
DETAILED: AHW
CHECKED: DCC
APPROVED: Approver
DATE: Issue Date

0 1/2 1
IF THIS BAR DOES NOT MEASURE 1" THEN DRAWING IS NOT TO FULL SCALE

CHA PROJECT NO.
000000

A-30-801

D7000

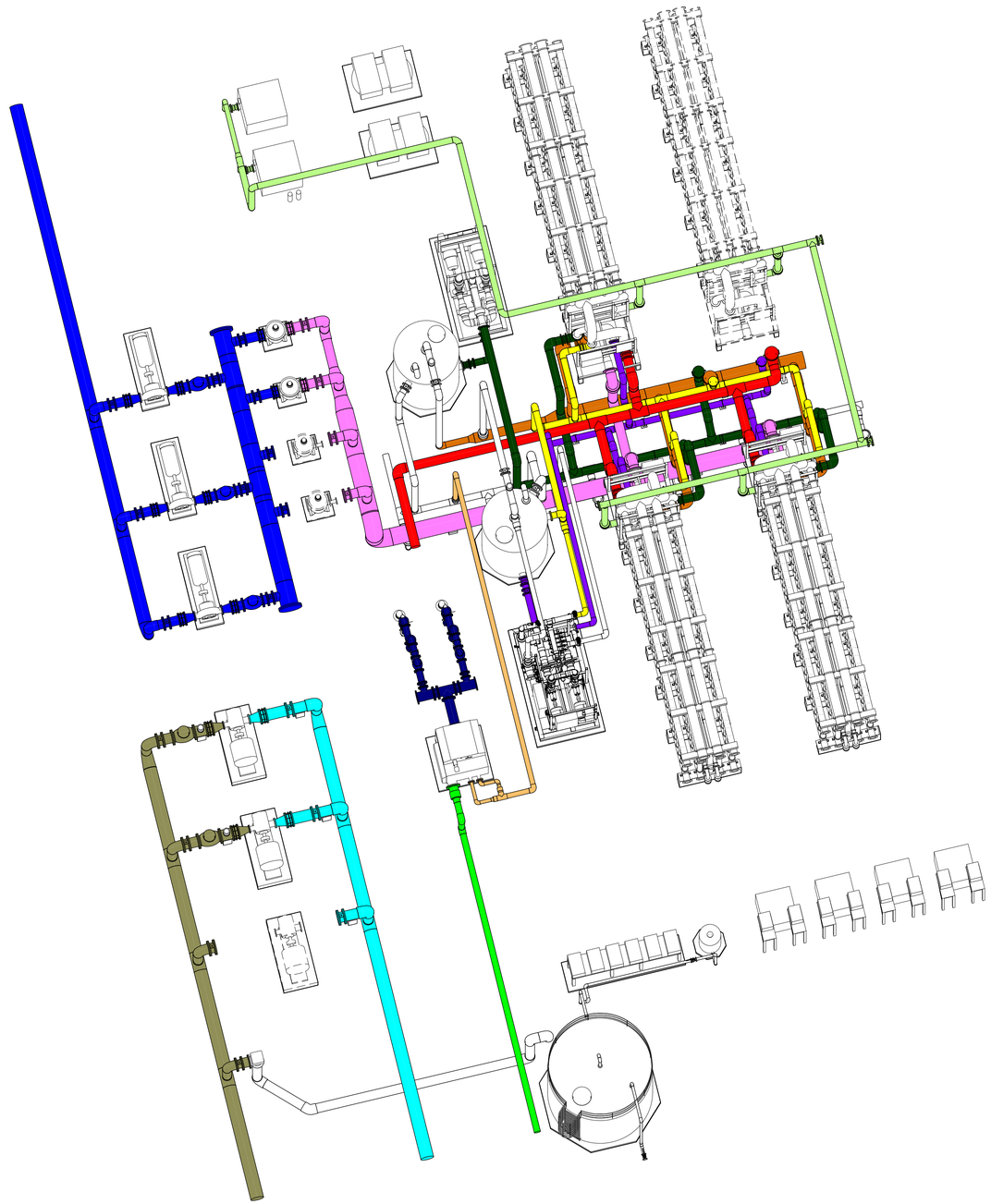

OVERALL PERSPECTIVE

PIPE SYSTEM LEGEND

- 1ST STAGE FEED
- 1ST STAGE BACKPULSE
- 1ST STAGE PERMEATE
- 1ST STAGE REJECT
- CIP FEED
- CIP RETURN
- DISC FILTER INFLUENT
- DISC FILTER EFFLUENT
- DISC FILTER BACKWASH WASTE
- RAW WATER INTAKE
- AIR LINE
- DRAIN LINE
- FINISHED WATER FEED
- FINISHED WATER DISCHARGE
- BACKWASH WASTE

PRELIMINARY - NOT FOR CONSTRUCTION

DATE	REVISIONS AND RECORD OF ISSUE	NO.	BY	CHK	APP
02/20/15	GMP DRAWINGS	A			

PW: R:\d1281491\30-M-30-MEMBRANE-B1.rvt
SAVED: 3/5/2015 1:26:14 PM
PLOTTED:
USER:
DWG VER: A
XREF1:
XREF2:
XREF3:
XREF4:

BLACK & VEATCH
Building a world of difference.®

Black & Veatch Corporation
Virginia Beach, VA

BEDFORD REGIONAL WATER AUTHORITY
SMITH MOUNTAIN LAKE WTP &
RAW WATER PUMPING STATION / INTAKE

MECHANICAL
MEMBRANE/ADMIN BUILDING
OVERALL PERSPECTIVE

DESIGNED: Designer
DETAILED: Author
CHECKED: Checker
APPROVED: Approver
DATE: XX/XX/XXXX

0 1/2 1
IF THIS BAR DOES NOT MEASURE 1" THEN DRAWING IS NOT TO FULL SCALE

PROJECT NO.
182262

M-30-001
SHEET
OF -

D7000

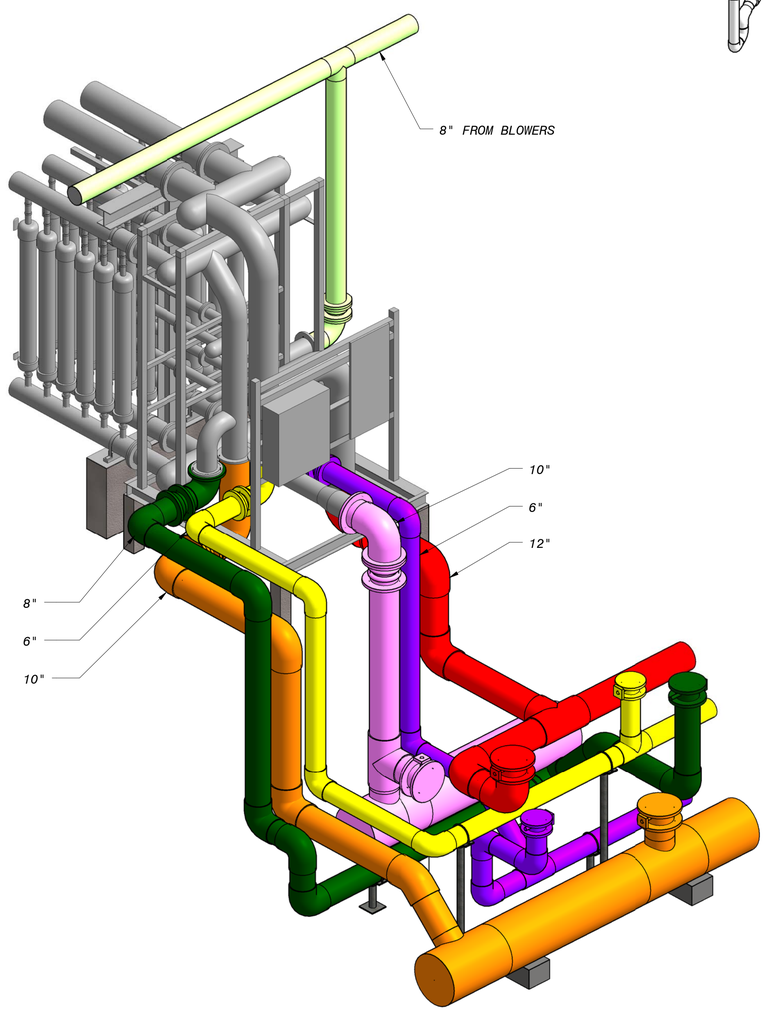

1ST STAGE MEMBRANE PERSPECTIVE

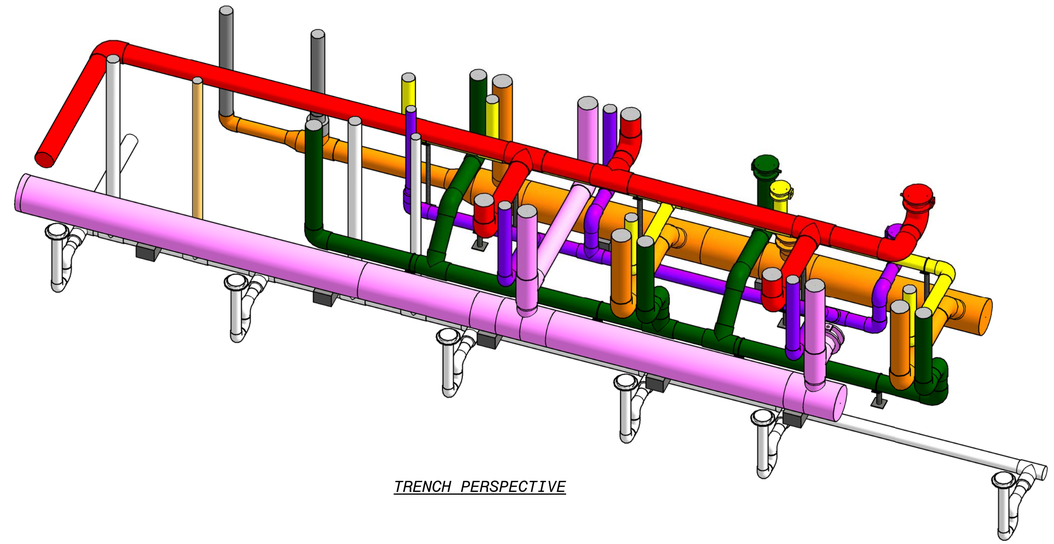

TRENCH PERSPECTIVE

PIPE SYSTEM LEGEND

- 1ST STAGE FEED
- 1ST STAGE BACKPULSE
- 1ST STAGE PERMEATE
- 1ST STAGE REJECT
- CIP FEED
- CIP RETURN
- DISC FILTER INFLUENT
- DISC FILTER EFFLUENT
- DISC FILTER BACKWASH WASTE
- RAW WATER INTAKE
- AIR LINE
- DRAIN LINE
- FINISHED WATER FEED
- FINISHED WATER DISCHARGE
- BACKWASH WASTE

PRELIMINARY - NOT FOR CONSTRUCTION

DATE	REVISIONS AND RECORD OF ISSUE	NO.	BY	CHK	APP
02/20/15	GMP DRAWINGS	A			

PW: R:\d1281491\3D-M-30-MEMBRANE-B1.rvt
SAVED: 3/5/2015 1:26:51 PM
PLOTTED:
USER:
DWG VER: A
XREF1:
XREF2:
XREF3:
XREF4:

BLACK & VEATCH
Building a world of difference.®

Black & Veatch Corporation
Virginia Beach, VA

BEDFORD REGIONAL WATER AUTHORITY
SMITH MOUNTAIN LAKE WTP &
RAW WATER PUMPING STATION / INTAKE

MECHANICAL
MEMBRANE/ADMIN BUILDING
PERSPECTIVES

DESIGNED: Designer
DETAILED: Author
CHECKED: Checker
APPROVED: Approver
DATE: XX/XX/XXXX

0 1/2 1
IF THIS BAR DOES NOT MEASURE 1" THEN DRAWING IS NOT TO FULL SCALE

PROJECT NO.
182262

M-30-002
SHEET
OF -

D7000

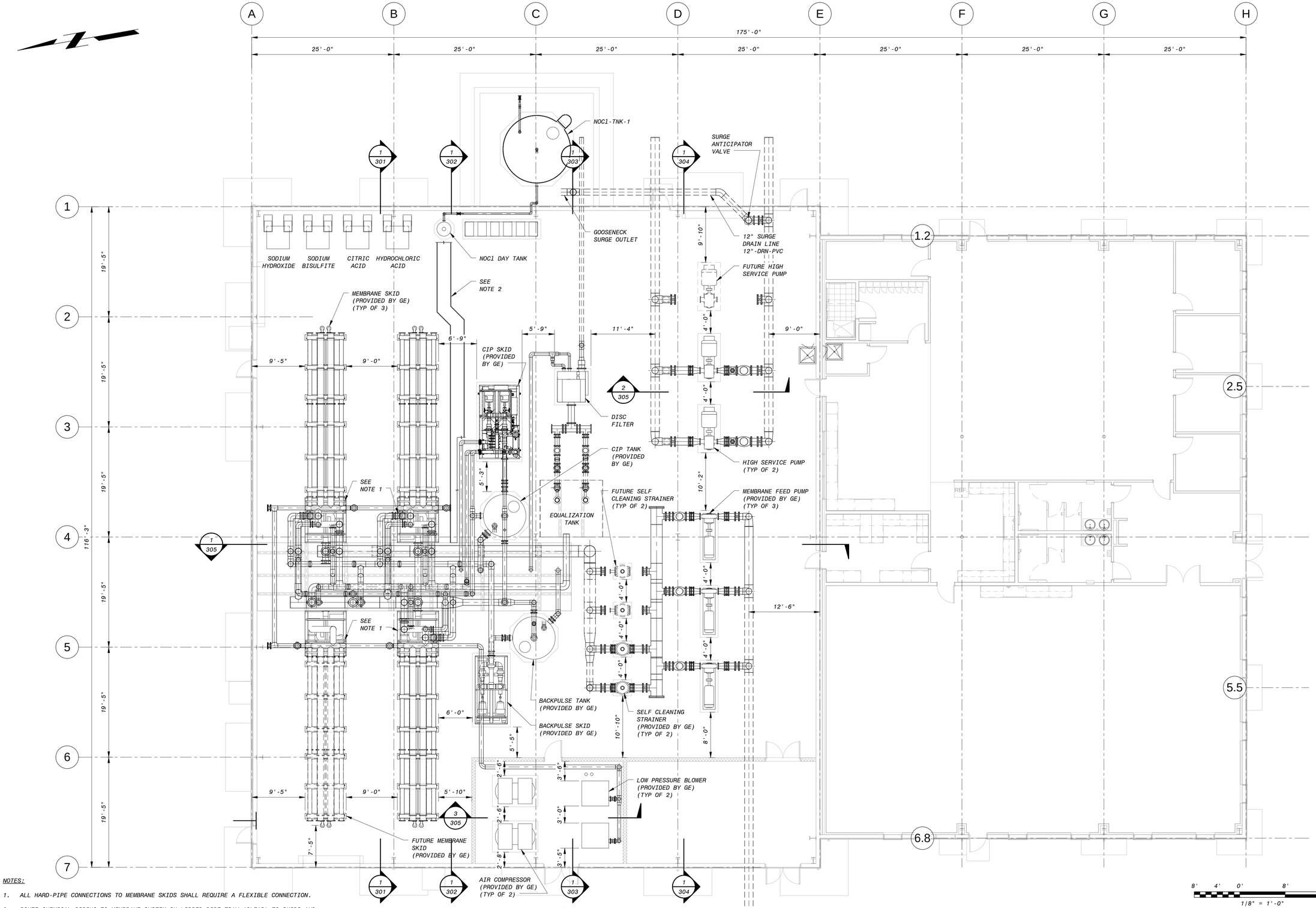

MEMBRANE/ADMIN BUILDING - OPERATING FLOOR PLAN

1/8" = 1'-0"

NOTES:

1. ALL HARD-PIPE CONNECTIONS TO MEMBRANE SKIDS SHALL REQUIRE A FLEXIBLE CONNECTION.
2. ROUTE CHEMICAL PIPING TO MEMBRANE SYSTEM IN LIPPED PIPE TRAY (CLEAR) TO SKIDS AND CIP/BACKPULSE SYSTEM. SLOPE TRAY TOWARDS TRENCH. PROVIDE TRAY DRAIN PIPE AT TRENCH AND ROUTE TO DRAIN BELOW TRENCH.

PRELIMINARY - NOT FOR CONSTRUCTION

NO.	BY	CHK	APP	DATE	REVISIONS AND RECORD OF ISSUE
A				02/20/15	GMP DRAWINGS

PW: R:\d1281491\30-M-30-MEMBRANE-B1.rvt
SAVED: 3/5/2015 1:21:31 PM
PLOTTED:
USER:
XREF1:
XREF2:
XREF3:
XREF4:
DWG VER: A

BLACK & VEATCH
Building a world of difference.
Black & Veatch Corporation
Virginia Beach, VA

BEDFORD REGIONAL WATER AUTHORITY
SMITH MOUNTAIN LAKE WTP &
RAW WATER PUMPING STATION / INTAKE

MECHANICAL
MEMBRANE/ADMIN BUILDING
OPERATING FLOOR PLAN

DESIGNED: Designer
DETAILED: Author
CHECKED: Checker
APPROVED: Approver
DATE: XX/XX/XXXX

0 1/2 1
IF THIS BAR DOES NOT MEASURE 1" THEN DRAWING IS NOT TO FULL SCALE

PROJECT NO.
182262

M-30-101
SHEET
OF -

D7000

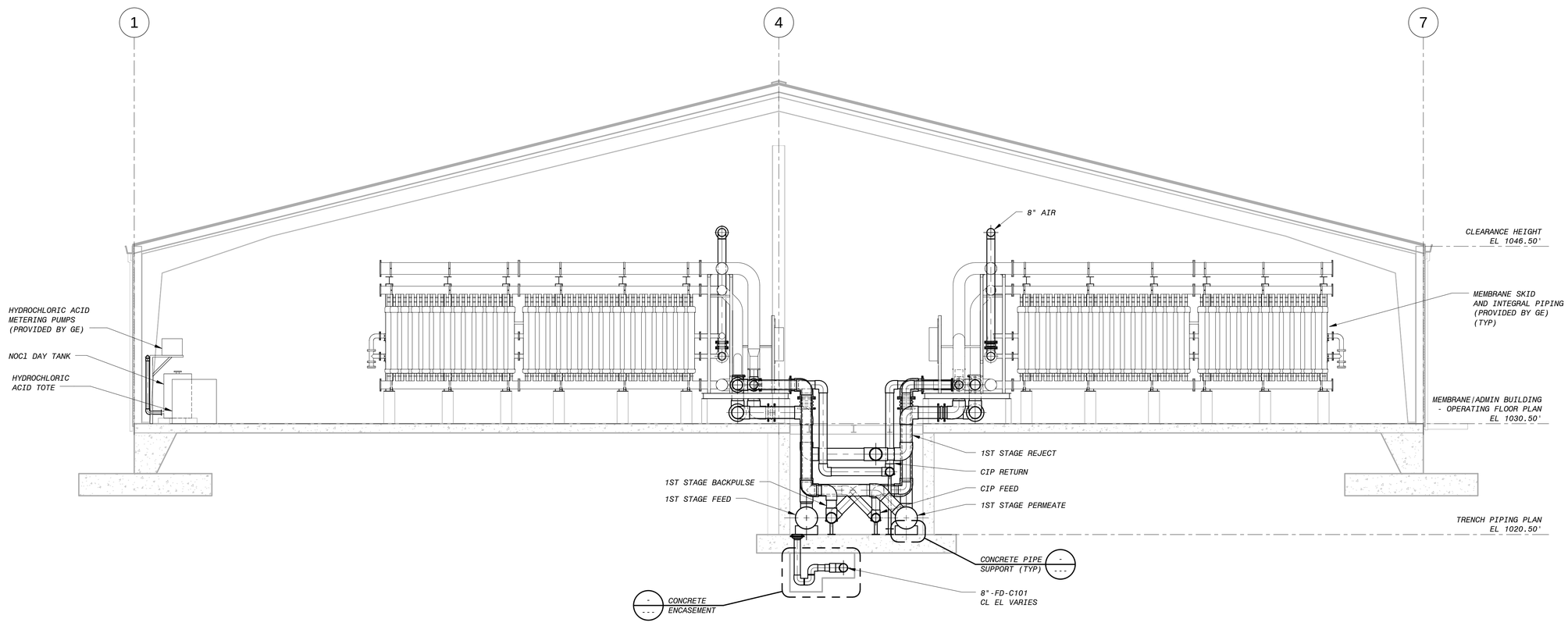

1 / 101 SECTION
3/16" = 1'-0"

6' 4' 2' 0' 5' 10'
3/16" = 1'-0"

PRELIMINARY - NOT FOR CONSTRUCTION

NO.	BY	CHK	APP	REVISIONS AND RECORD OF ISSUE	DATE
A				GMP DRAWINGS	02/20/15

PW: R:\d1281491\3D-M-30-MEMBRANE-B1.rvt
SAVED: 3/5/2015 1:22:15 PM
PLOTTED:
USER:
DWG VER: A
XREF1:
XREF2:
XREF3:
XREF4:

BLACK & VEATCH
Building a world of difference.
Black & Veatch Corporation
Virginia Beach, VA

BEDFORD REGIONAL WATER AUTHORITY
SMITH MOUNTAIN LAKE WTP &
RAW WATER PUMPING STATION / INTAKE

MECHANICAL
MEMBRANE/ADMIN BUILDING
SECTIONS - SHEET 1 OF 5

DESIGNED: Designer
DETAILED: Author
CHECKED: Checker
APPROVED: Approver
DATE: XX/XX/XXXX

0 1/2 1
IF THIS BAR DOES NOT MEASURE 1" THEN DRAWING IS NOT TO FULL SCALE

PROJECT NO.
182262

M-30-301
SHEET
OF -

D7000

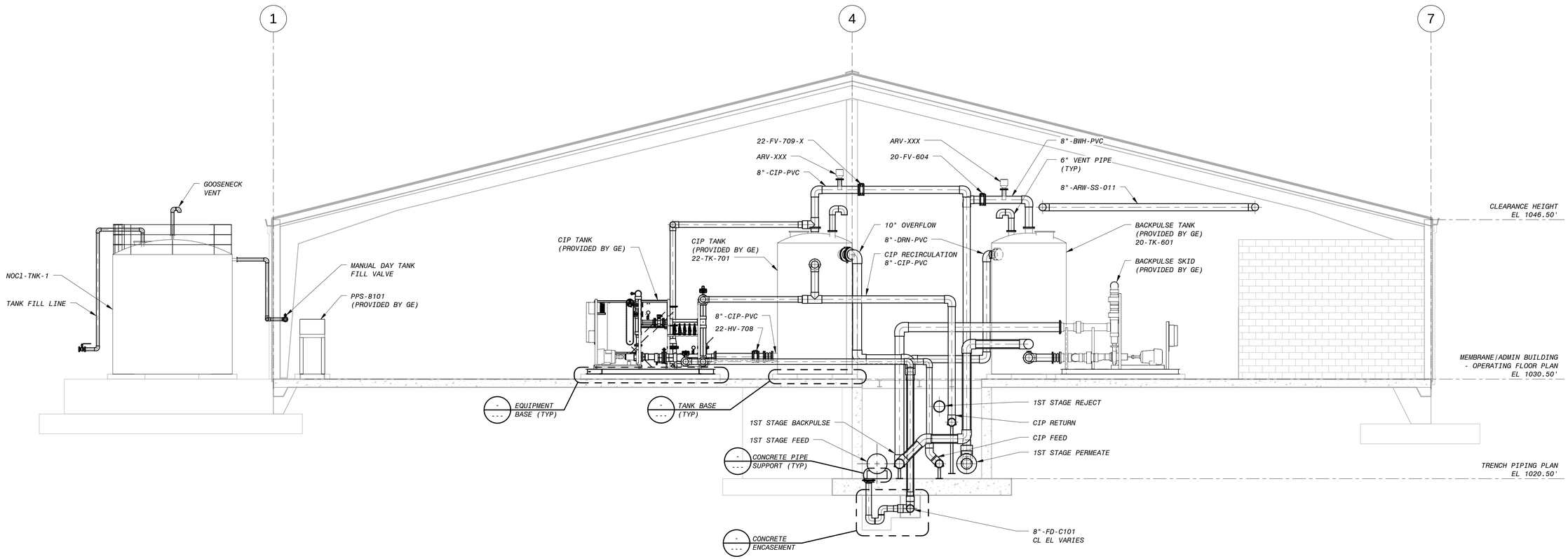

1/101 SECTION
3/16" = 1'-0"

4' 2' 0' 4' 8'
1/4" = 1'-0"

PRELIMINARY - NOT FOR CONSTRUCTION

NO.	BY	CHK	APP
A			

02/20/15 GMP DRAWINGS
DATE REVISIONS AND RECORD OF ISSUE

PW: R:\d1281491\30-M-30-MEMBRANE-B1.rvt
SW: XREF1:
SAVED: 3/5/2015 1:22:36 PM XREF2:
PLOTTED: XREF3:
USER: DWG VER: A XREF4:

BLACK & VEATCH
Building a world of difference.®

Black & Veatch Corporation
Virginia Beach, VA

BEDFORD REGIONAL WATER AUTHORITY
SMITH MOUNTAIN LAKE WTP &
RAW WATER PUMPING STATION / INTAKE

MECHANICAL
MEMBRANE/ADMIN BUILDING
SECTIONS - SHEET 2 OF 5

DESIGNED: Designer
DETAILED: Author
CHECKED: Checker
APPROVED: Approver
DATE: XX/XX/XXXX

0 1/2 1
IF THIS BAR DOES NOT MEASURE 1" THEN DRAWING IS NOT TO FULL SCALE

PROJECT NO.
182262

M-30-302
SHEET
OF -

D7000

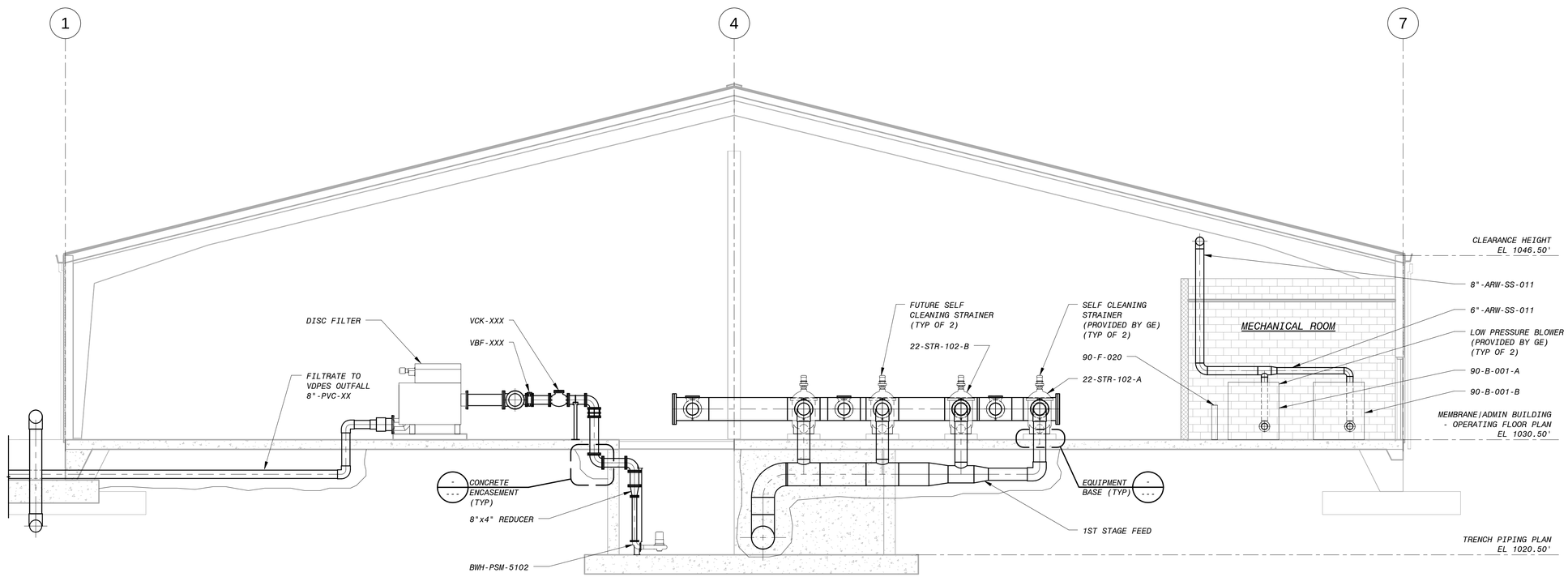

1/101 SECTION
3/16" = 1'-0"

6' 4' 2' 0' 5' 10'
3/16" = 1'-0"

PRELIMINARY - NOT FOR CONSTRUCTION

NO.	BY	CHK	APP
A			

02/20/15 GMP DRAWINGS
DATE REVISIONS AND RECORD OF ISSUE

PW: R:\d1281491\30-M-30-MEMBRANE-B1.rvt
SW: XREF1:
SAVED: 3/5/2015 1:22:47 PM XREF2:
PLOTTED: XREF3:
USER: DWG VER: A XREF4:

BLACK & VEATCH
Building a world of difference.®

Black & Veatch Corporation
Virginia Beach, VA

BEDFORD REGIONAL WATER AUTHORITY
SMITH MOUNTAIN LAKE WTP &
RAW WATER PUMPING STATION / INTAKE

MECHANICAL
MEMBRANE/ADMIN BUILDING
SECTIONS - SHEET 3 OF 5

DESIGNED: Designer
DETAILED: Author
CHECKED: Checker
APPROVED: Approver
DATE: XX/XX/XXXX

0 1/2 1
IF THIS BAR DOES NOT MEASURE 1" THEN DRAWING IS NOT TO FULL SCALE

PROJECT NO.
182262

M-30-303
SHEET
OF -

D7000

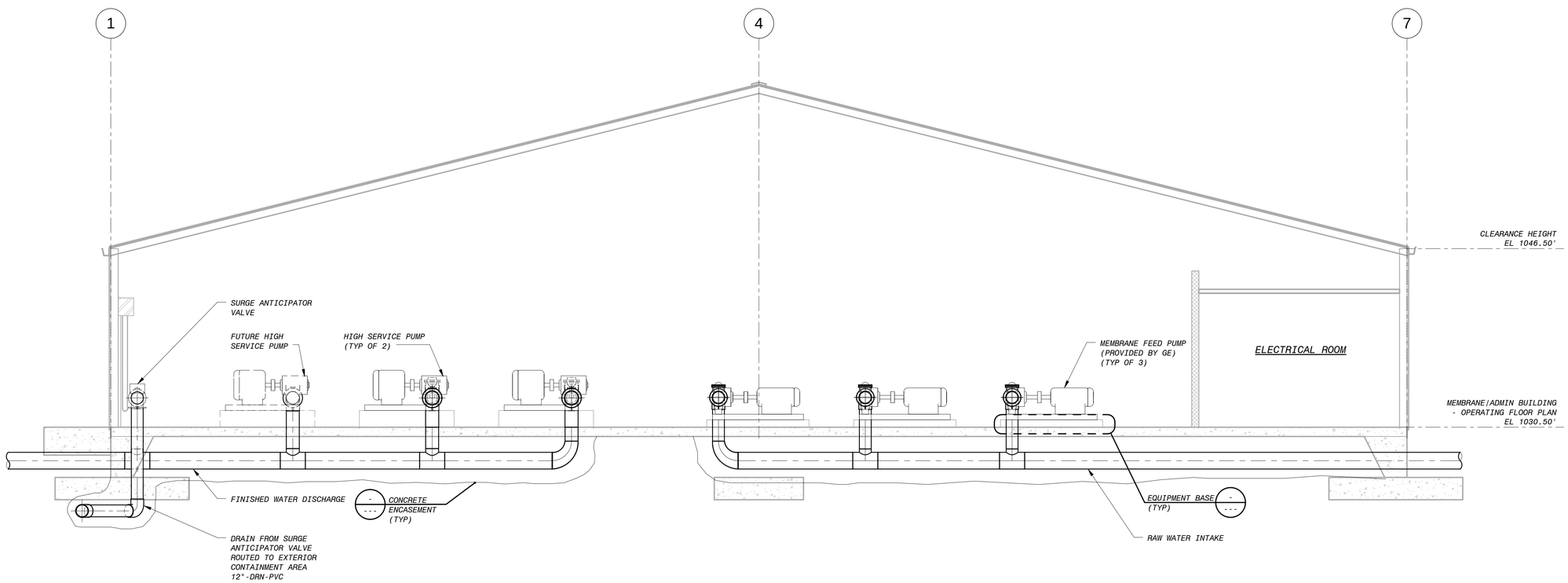

1 / 101 SECTION
3/16" = 1'-0"

PRELIMINARY - NOT FOR CONSTRUCTION

NO.	BY	CHK	APP
A			

02/20/15 GMP DRAWINGS
DATE REVISIONS AND RECORD OF ISSUE

PW: R:\d1281491\30-M-30-MEMBRANE-B1.rvt
SW: XREF1:
SAVED: 3/5/2015 1:23:00 PM XREF2:
PLOTTED: XREF3:
USER: DWG VER: A XREF4:

BLACK & VEATCH
Building a world of difference.®

Black & Veatch Corporation
Virginia Beach, VA

BEDFORD REGIONAL WATER AUTHORITY
SMITH MOUNTAIN LAKE WTP &
RAW WATER PUMPING STATION / INTAKE

MECHANICAL
MEMBRANE/ADMIN BUILDING
SECTIONS - SHEET 4 OF 5

DESIGNED: Designer
DETAILED: Author
CHECKED: Checker
APPROVED: Approver
DATE: XX/XX/XXXX

0 1/2 1
IF THIS BAR DOES NOT MEASURE 1" THEN DRAWING IS NOT TO FULL SCALE

PROJECT NO.
182262

M-30-304
SHEET
OF -

D7000

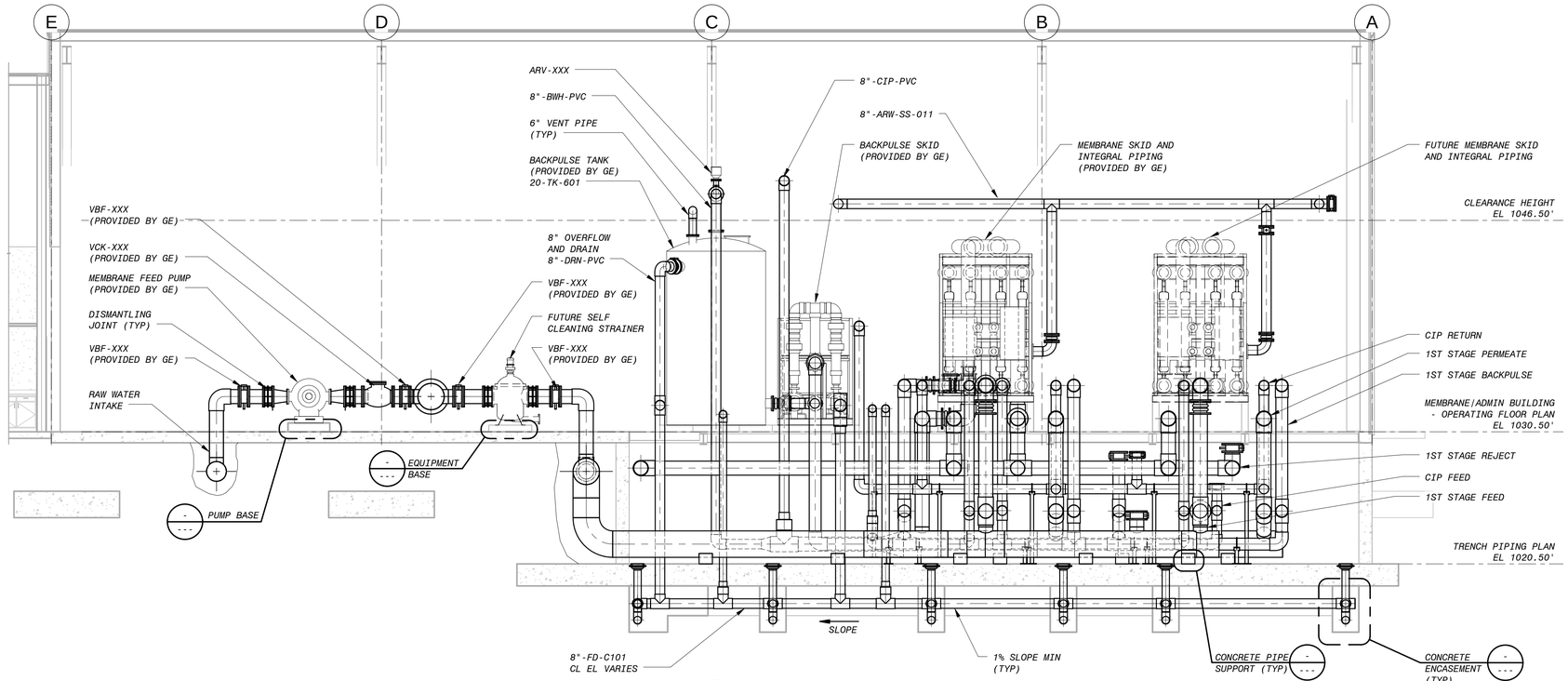

1/101 SECTION 3/16" = 1'-0"

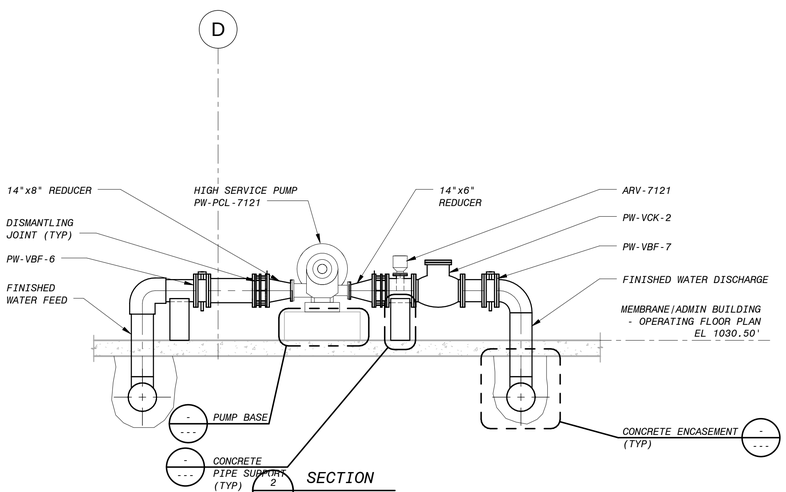

2/101 SECTION 1/4" = 1'-0"

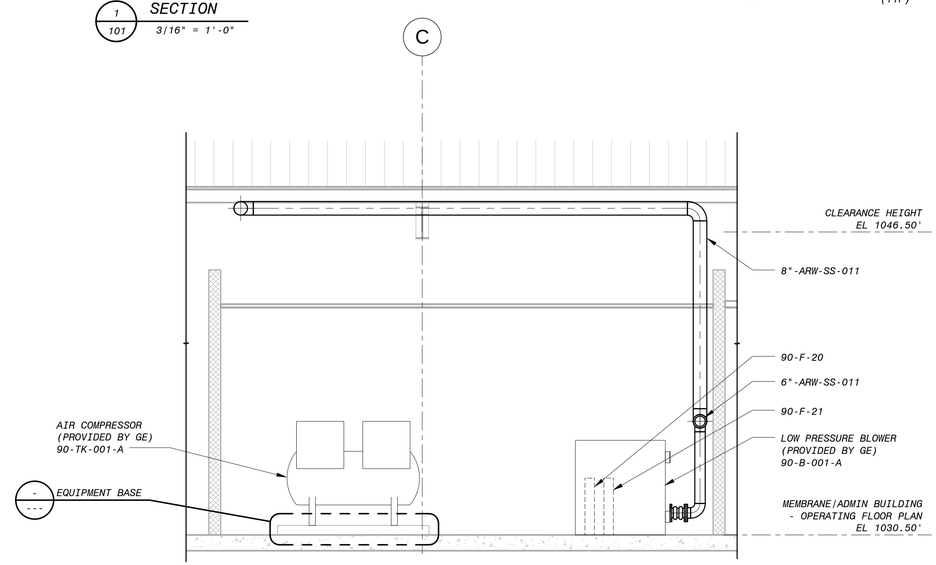

3/101 SECTION 1/4" = 1'-0"

4' 2' 0' 4' 8'
1/4" = 1'-0"

6' 4' 2' 0' 5' 10'
3/16" = 1'-0"

PRELIMINARY - NOT FOR CONSTRUCTION

NO.	BY	CHK	APP
A			

02/20/15 GMP DRAWINGS
DATE REVISIONS AND RECORD OF ISSUE

PW: R:\d1281491\30-M-30-MEMBRANE-B1.rvt
SAVED: 3/5/2015 1:23:47 PM
PLOTTED:
USER:
XREF1:
XREF2:
XREF3:
XREF4:
DWG VER: A

BLACK & VEATCH
Building a world of difference.
Black & Veatch Corporation
Virginia Beach, VA

BEDFORD REGIONAL WATER AUTHORITY
SMITH MOUNTAIN LAKE WTP &
RAW WATER PUMPING STATION / INTAKE

MECHANICAL
MEMBRANE/ADMIN BUILDING
SECTIONS - SHEET 5 OF 5

DESIGNED: Designer
DETAILED: Author
CHECKED: Checker
APPROVED: Approver
DATE: XX/XX/XXXX

0 1/2 1
IF THIS BAR DOES NOT MEASURE 1" THEN DRAWING IS NOT TO FULL SCALE

PROJECT NO.
182262

M-30-305
SHEET
OF -

D7000

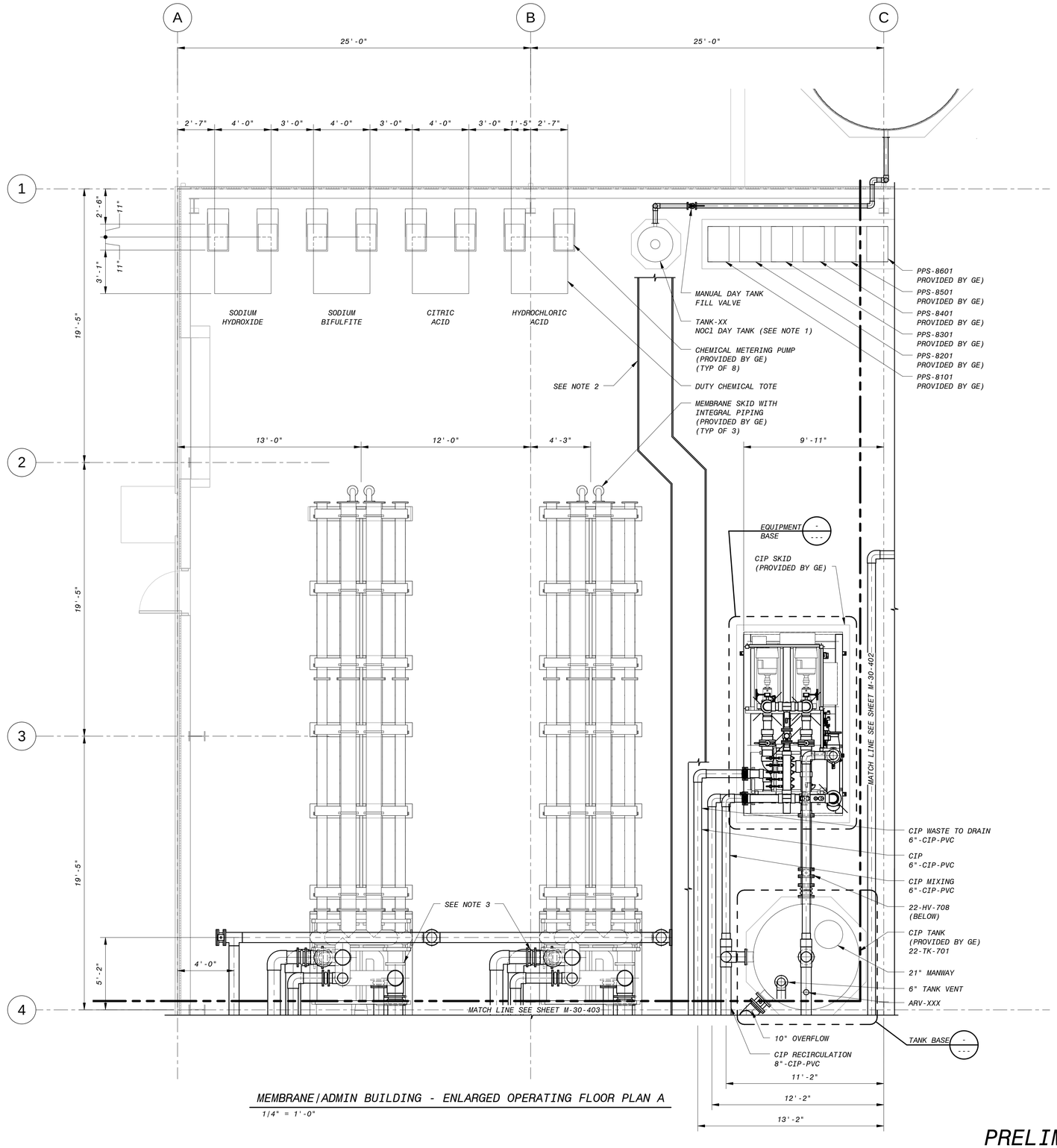

MEMBRANE/ADMIN BUILDING - ENLARGED OPERATING FLOOR PLAN A

1/4" = 1'-0"

NOTES:

1. ALL NOCl TANK AND PUMP VENTS TO BE ROUTED TO EXTERIOR OF BUILDING.
2. ROUTE CHEMICAL FEED PIPING TO MEMBRANE SYSTEM IN 30" WIDE LIPPED PIPE TRAY (CLEAR) 8'-0" ABOVE FINISHED FLOOR TO SKIDS AND CIP/BACKPULSE SYSTEM. SLOPE TRAY TOWARDS TRENCH. PROVIDE TRAY DRAIN PIPE AT TRENCH AND ROUTE TO DRAIN BELOW TRENCH.
3. ALL HARD-PIPE CONNECTIONS TO MEMBRANE SKIDS SHALL REQUIRE A FLEXIBLE CONNECTION.

4' 2' 0' 4' 8'

1/4" = 1'-0"

PRELIMINARY - NOT FOR CONSTRUCTION

NO.	BY	CHK	APP
A			

GMP DRAWINGS

02/20/15 REVISIONS AND RECORD OF ISSUE

DATE

PW: R:\d1281491\30-M-30-MEMBRANE-B1.rvt XREF1:

SAVED: 3/5/2015 1:24:11 PM XREF2:

PLOTTED: XREF3:

USER: DWG VER: A XREF4:

BLACK & VEATCH
Building a world of difference.®

Black & Veatch Corporation
Virginia Beach, VA

BEDFORD REGIONAL WATER AUTHORITY
SMITH MOUNTAIN LAKE WTP &
RAW WATER PUMPING STATION / INTAKE

MECHANICAL
MEMBRANE/ADMIN BUILDING
ENLARGED OPERATING FLOOR PLAN A

DESIGNED: Designer
DETAILED: Author
CHECKED: Checker
APPROVED: Approver
DATE: XX/XX/XXXX

0 1/2 1

IF THIS BAR DOES NOT MEASURE 1" THEN DRAWING IS NOT TO FULL SCALE

PROJECT NO.
182262

M-30-401
SHEET
OF -

D7000

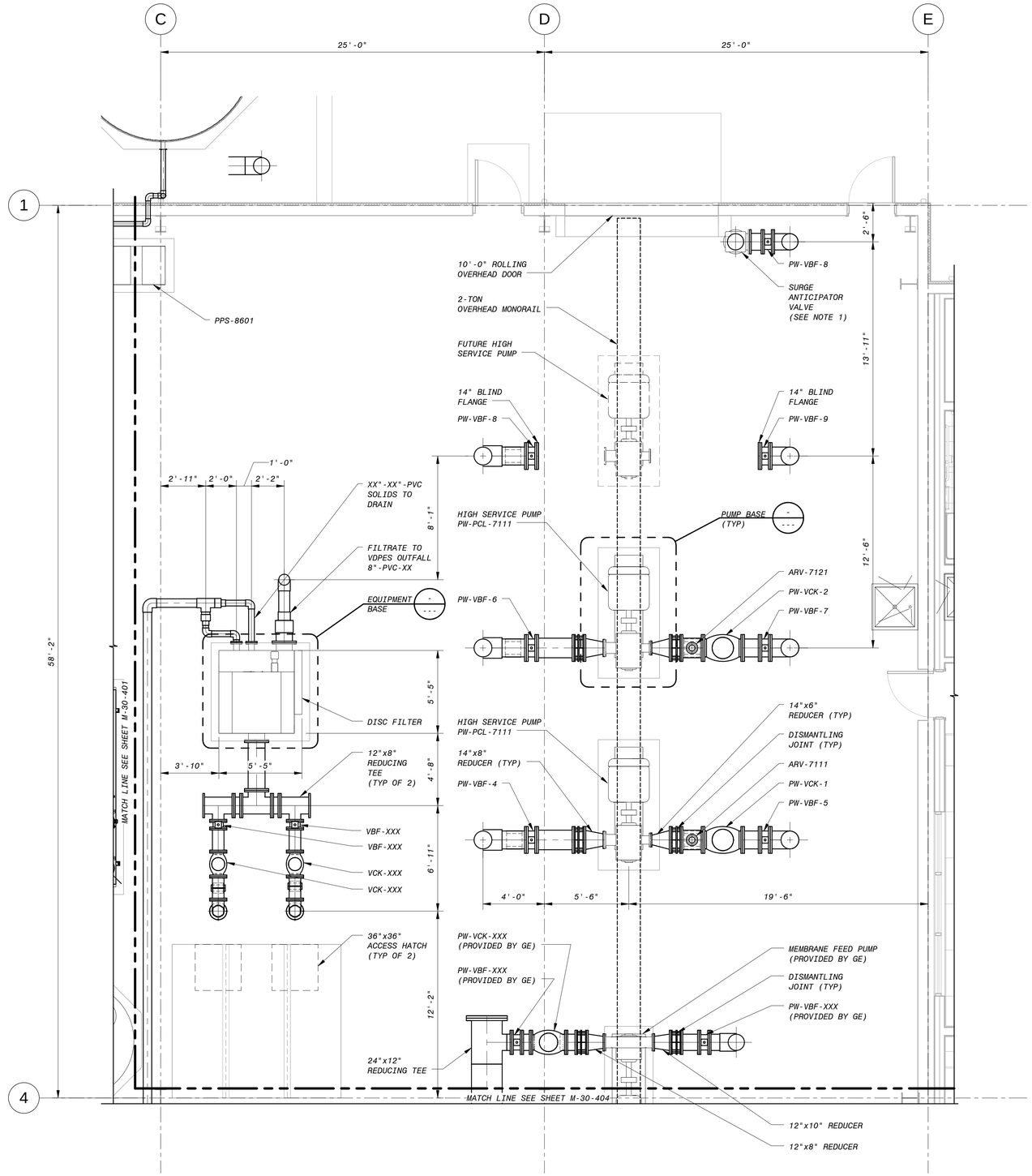

MEMBRANE/ADMIN BUILDING - ENLARGED OPERATING FLOOR PLAN B

1/4" = 1'-0"

NOTE:

1. ROUTE IN 12" PIPE TO HYPOCHLORIDE CONTAINMENT AREA.

4' 2' 0' 4' 8'

1/4" = 1'-0"

PRELIMINARY - NOT FOR CONSTRUCTION

NO.	BY	CHK	APP	REVISIONS AND RECORD OF ISSUE
A				GMP DRAWINGS

02/20/15 — DATE

PW: R:\d1281491\30-M-30-MEMBRANE-B1.rvt
XREF1:
XREF2:
XREF3:
XREF4:
SAVED: 3/5/2015 1:24:20 PM
PLOTTED:
USER:
DWG VER: A

BLACK & VEATCH
Building a world of difference.®

Black & Veatch Corporation
Virginia Beach, VA

BEDFORD REGIONAL WATER AUTHORITY
SMITH MOUNTAIN LAKE WTP &
RAW WATER PUMPING STATION / INTAKE

MECHANICAL
MEMBRANE/ADMIN BUILDING
ENLARGED OPERATING FLOOR PLAN B

DESIGNED: Designer
DETAILED: Author
CHECKED: Checker
APPROVED: Approver
DATE: XX/XX/XXXX

0 1/2 1
IF THIS BAR DOES NOT MEASURE 1" THEN DRAWING IS NOT TO FULL SCALE

PROJECT NO.
182262

M-30-402
SHEET
OF -

D7000

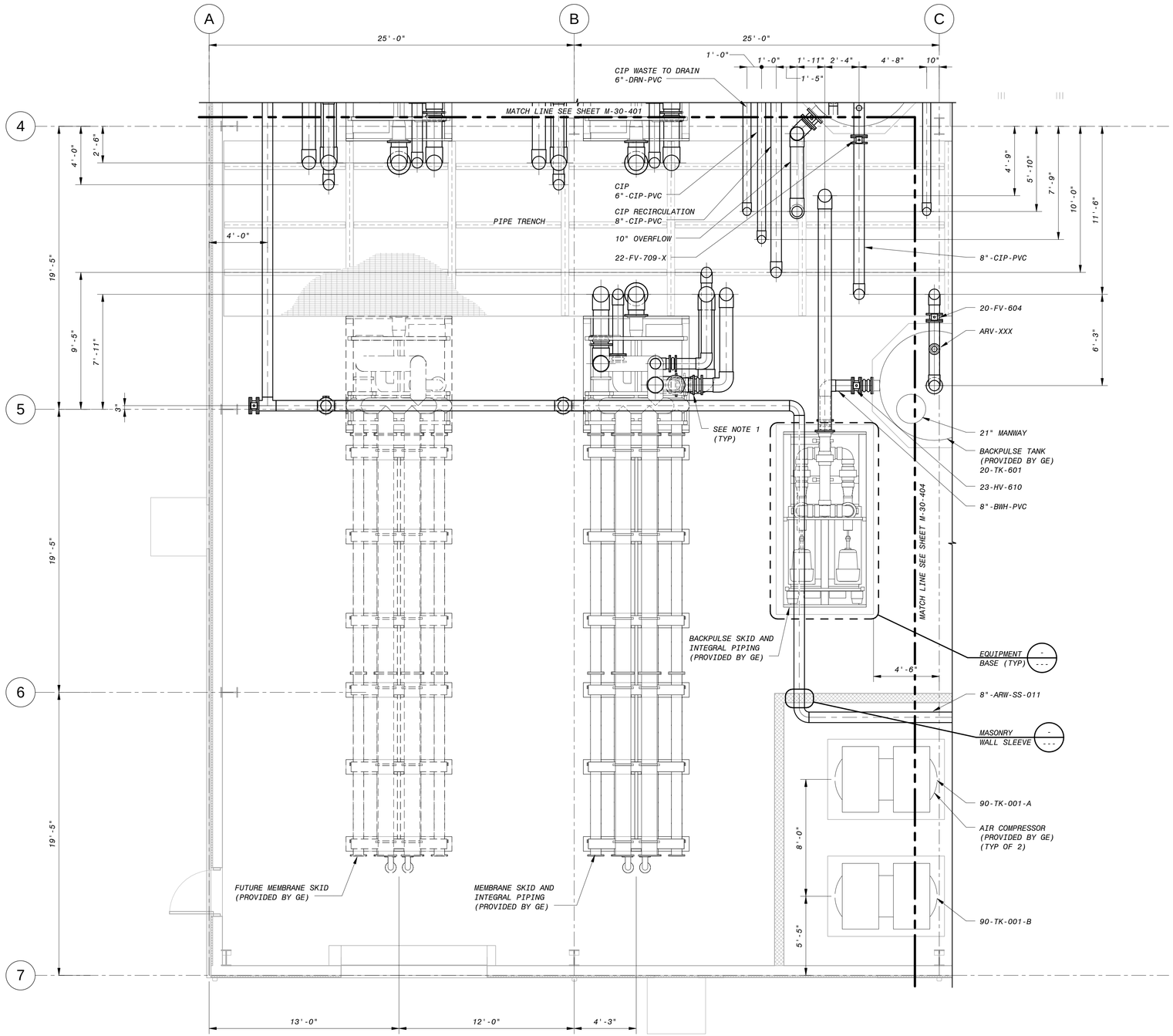

MEMBRANE/ADMIN BUILDING - ENLARGED OPERATING FLOOR PLAN C

1/4" = 1'-0"

NOTE:

1. ALL HARD-PIPE CONNECTIONS TO MEMBRANE SKIDS SHALL REQUIRE A FLEXIBLE CONNECTION.

4' 2' 0' 4' 8'

1/4" = 1'-0"

PRELIMINARY - NOT FOR CONSTRUCTION

DATE	REVISIONS AND RECORD OF ISSUE	NO.	BY	CHK/APP
02/20/15	GMP DRAWINGS	A		

PW: R:\d1281491\30-M-30-MEMBRANE-B1.rvt
XREF1:
SAVED: 3/5/2015 1:24:33 PM
XREF2:
PLOTTED:
XREF3:
USER:
DWG VER: A
XREF4:

BLACK & VEATCH
Building a world of difference.

Black & Veatch Corporation
Virginia Beach, VA

BEDFORD REGIONAL WATER AUTHORITY
SMITH MOUNTAIN LAKE WTP &
RAW WATER PUMPING STATION / INTAKE

MECHANICAL
MEMBRANE/ADMIN BUILDING
ENLARGED OPERATING FLOOR PLAN C

DESIGNED: Designer
DETAILED: Author
CHECKED: Checker
APPROVED: Approver
DATE: XX/XX/XXXX

0 1/2 1
IF THIS BAR DOES NOT MEASURE 1" THEN DRAWING IS NOT TO FULL SCALE

PROJECT NO.
182262

M-30-403
SHEET
OF -

D7000

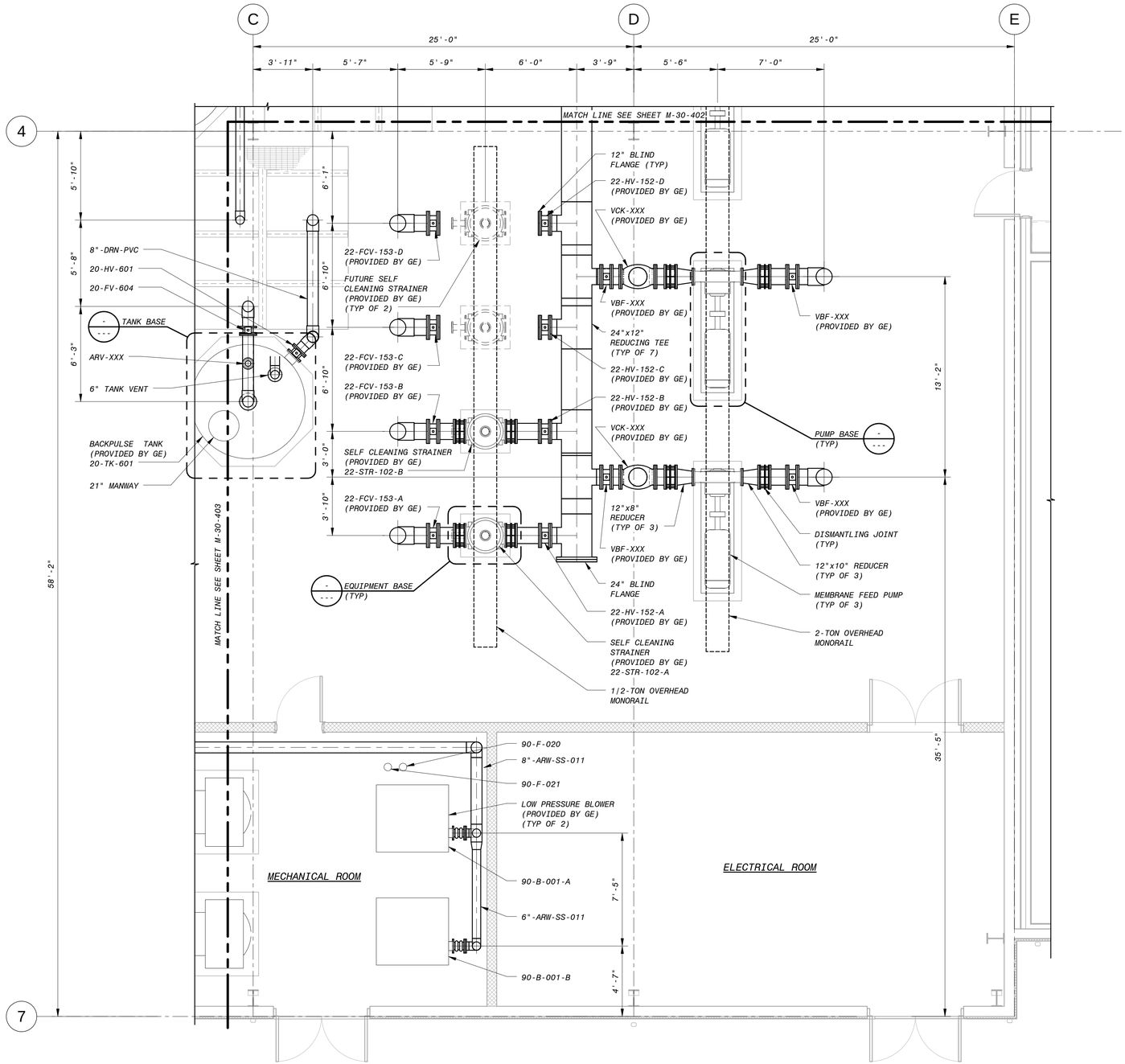

MEMBRANE/ADMIN BUILDING - ENLARGED OPERATING FLOOR PLAN D

1/4" = 1'-0"

NOTE:

1. ROUTE CHEMICAL FEED PIPING TO MEMBRANE SYSTEM IN LIPPED PIPE TRAY (CLEAR) TO SKIDS AND CIP/BACKPULSE SYSTEM. SLOPE TRAY TOWARDS TRENCH. PROVIDE TRAY DRAIN PIPE AT TRENCH AND ROUTE TO DRAIN BELOW TRENCH.

4' 2' 0' 4' 8'

1/4" = 1'-0"

PRELIMINARY - NOT FOR CONSTRUCTION

NO.	BY	CHK	APP
A			

GMP DRAWINGS
REVISIONS AND RECORD OF ISSUE

02/20/15
DATE

PW: R:\d1281491\30-M-30-MEMBRANE-B1.TWT
SW: XREF1:
SAVED: 3/5/2015 1:24:45 PM XREF2:
PLOTTED: XREF3:
USER: DWG VER: A XREF4:

BLACK & VEATCH
Building a world of difference.®

Black & Veatch Corporation
Virginia Beach, VA

BEDFORD REGIONAL WATER AUTHORITY
SMITH MOUNTAIN LAKE WTP &
RAW WATER PUMPING STATION / INTAKE

MECHANICAL
MEMBRANE/ADMIN BUILDING
ENLARGED OPERATING FLOOR PLAN D

DESIGNED: Designer
DETAILED: Author
CHECKED: Checker
APPROVED: Approver
DATE: XX/XX/XXXX

0 1/2 1

IF THIS BAR DOES NOT MEASURE 1" THEN DRAWING IS NOT TO FULL SCALE

PROJECT NO.
182262

M-30-404
SHEET
OF -

D7000

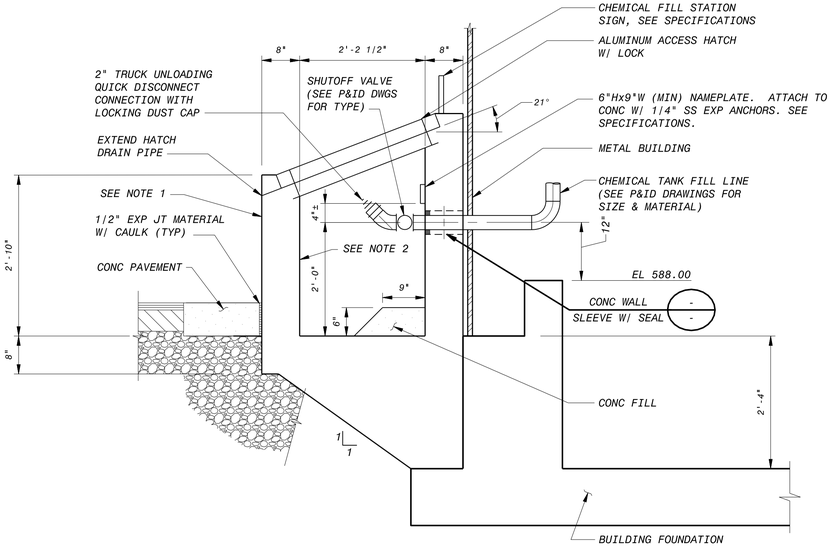

SECTION 1 / --
3/4" = 1'-0"

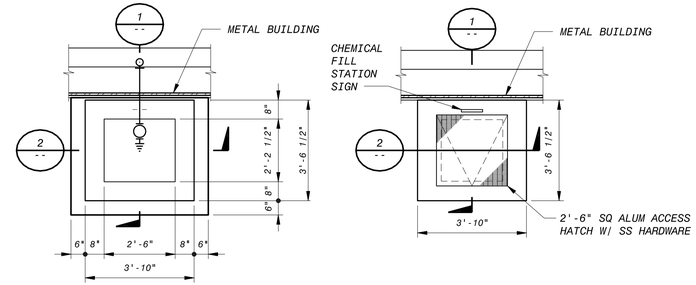

SECTIONAL PLAN

TOP PLAN

CHEMICAL FILL STATION - TYPE 1 (A / MF107)
3/8" = 1'-0"

NOTES:

1. GROUT RUB EXPOSED EXTERIOR SURFACES OF CONCRETE WALLS OF CHEMICAL FILL STATIONS (TEXTURE AND COLOR TO MATCH PRECAST CONC WALL PANELS).
2. COAT ALL INSIDE CONCRETE SURFACES OF CHEMICAL FILL STATIONS AS SPECIFIED.

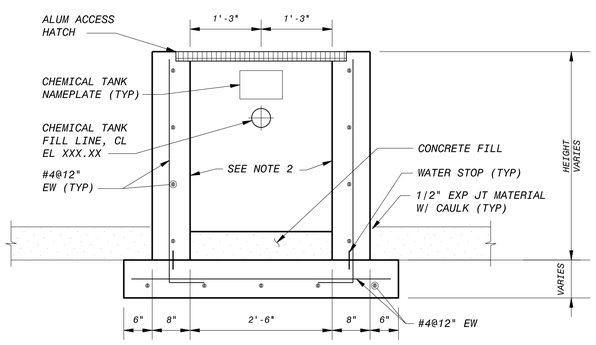

SECTION 2 / --
3/4" = 1'-0"

PRELIMINARY - NOT FOR CONSTRUCTION

NO.	BY	CK	APP
A			

REVISIONS AND RECORD OF ISSUE

DATE	
02/20/15	GMP DRAWINGS

50.3070 - Mechanical Process Drawings
M-30-501.dwg

XREF1:
XREF2:
XREF3:
XREF4:

SAVED: VAH16843, 12/30/2014 3:59:13 PM
PLOTTED:
USER: ADE49353 DWG VER: 1000

BLACK & VEATCH
Building a world of difference.
Black & Veatch Corporation
Virginia Beach, VA

BEDFORD REGIONAL WATER AUTHORITY
SMITH MOUNTAIN LAKE WTP &
RAW WATER PUMPING STATION / INTAKE

MECHANICAL DETAILS

DESIGNED: ADE
DETAILED: VVV
CHECKED:
APPROVED:
DATE: DECEMBER 2014

0 1/2 1
IF THIS BAR DOES NOT MEASURE 1" THEN DRAWING IS NOT TO FULL SCALE

PROJECT NO.
182262

M-30-501
SHEET
OF

FD7000
D7000

TUBE DIFFUSER DETAILS			
CHEMICAL	DIFFUSER LOCATION	DIFFUSER MATERIAL	DIFFUSER TUBE DIA, IN
HYDROCHLORIC ACID	CIP NEUTRALIZATION	ALLOY 20	1/2"
SODIUM HYDROXIDE	NEUTRALIZATION	STAINLESS STEEL	1"
SODIUM HYPOCHLORITE	FINISHED WATER AND MEMBRANES	HASTELLOY C-22 OR C-276	1"
SODIUM BISULFITE	NEUTRALIZATION	PVC	1"
CITRIC ACID	CIP	CPVC	1"

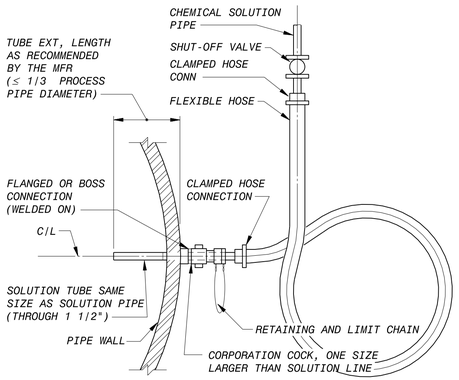

CORPORATION STOP TYPE DIFFUSER FOR CHEMICAL INJECTION (A)
NO SCALE

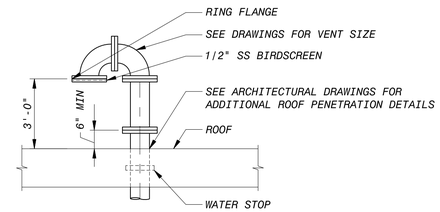

TANK VENT DETAIL (B)
NO SCALE

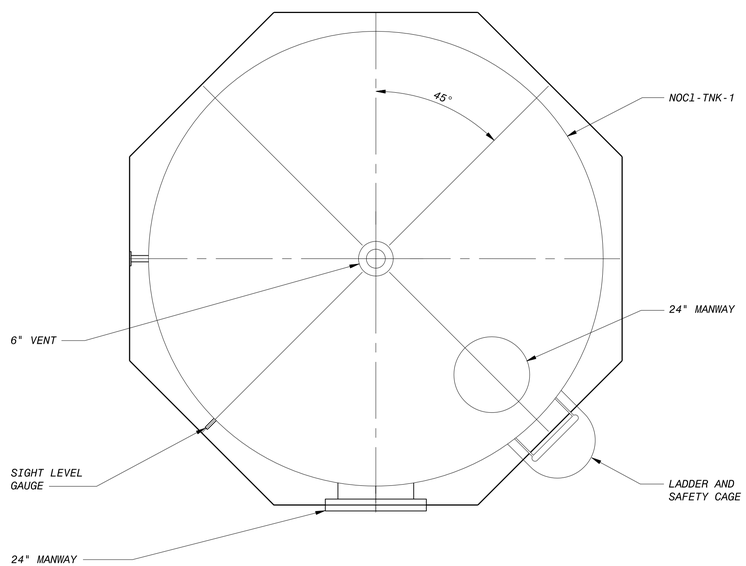

SODIUM HYPOCHLORITE STORAGE TANK
1/2" = 1'-0"

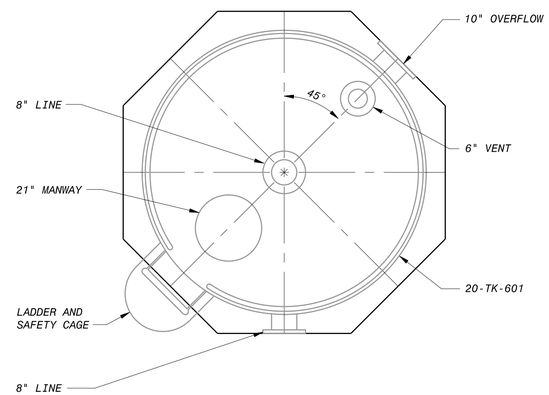

BACKPULSE TANK
1/2" = 1'-0"

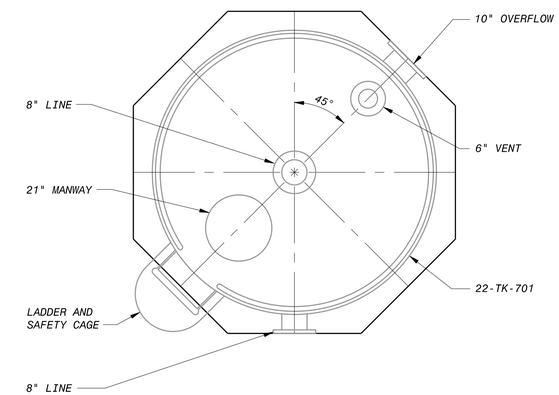

CIP TANK
1/2" = 1'-0"

NOTES:

1. SEE XXX FOR LOCATIONS OF CHEMICAL STORAGE TANKS.
2. SEE XXX FOR LOCATIONS OF CIP/NEUT TANKS.
3. SCREENED TANKS PROVIDED BY SIEMENS WATER TECHNOLOGIES (SWT) AND INSTALLED BY CONTRACTOR.

12" 6" 0 1' 2' 3' 4' 5'
1/2"=1'-0"

PRELIMINARY - NOT FOR CONSTRUCTION

NO.	BY	CK	APP
A			

DATE	REVISIONS AND RECORD OF ISSUE
02/20/15	GMP DRAWINGS

50-3070 - Mechanical Process Drawings
M-30-502.dwg
XREF1:
XREF2:
XREF3:
XREF4:
SAVED: KOE49353, 3/5/2015 12:37:52 PM
PLOTTED:
USER: KOE49353
DWG VER: 1000

BLACK & VEATCH
Building a world of difference.
Black & Veatch Corporation
Virginia Beach, VA

BEDFORD REGIONAL WATER AUTHORITY
SMITH MOUNTAIN LAKE WTP &
RAW WATER PUMPING STATION / INTAKE

MECHANICAL DETAILS

DESIGNED: ADE
DETAILED: VVV
CHECKED:
APPROVED:
DATE: DECEMBER 2014

0 1/2 1
IF THIS BAR DOES NOT MEASURE 1" THEN DRAWING IS NOT TO FULL SCALE

PROJECT NO.
182262

M-30-502
SHEET
OF

FD7000
D7000

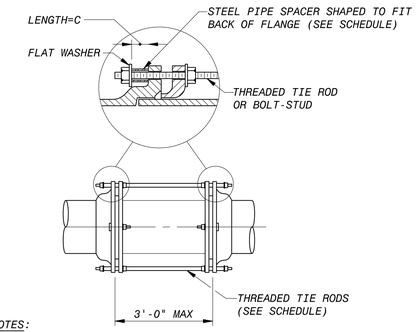

NOTES:

1. PRESSURE SHALL BE THE PRESSURE AT WHICH THE PIPE IS HYDROSTATICALLY TESTED, OR IF THERE IS NO HYDROSTATIC FIELD TEST, IT SHALL BE THE SPECIFIED SHOP TEST PRESSURE.
2. UNLESS OTHERWISE INDICATED, TIE RODS SHALL BE SPACED UNIFORMLY AROUND THE PIPE, BEGINNING WITH THE FIRST TWO AT THE HORIZONTAL CENTERLINE OF THE PIPE, SUBJECT TO THE ACCEPTANCE OF THE ENGINEER.
3. EXCEPT WHERE TIE RODS ARE REQUIRED, BOLTS FOR FOLLOWER RINGS SHALL BE TEE HEAD BOLTS.
4. AT CONTRACTOR'S OPTION, 4" THROUGH 48" MAY BE FURNISHED AS MECHANICAL JOINT STYLE WITH TIE RODS, OR POSITIVE LOCKING SEGMENTS AND/OR RINGS SUCH AS AMERICAN PIPE 14" THROUGH 36" SIZE MAY BE FURNISHED AS FLEX RING STYLE RESTRAINED JOINTS AND 42" THROUGH 64" SIZE MAY BE FURNISHED AS LOC RING STYLE RESTRAINED JOINTS, OR U.S. PIPE "TR-FLEX", OR GRIFFIN PIPE "SNAP-LOCK".

MECHANICAL TIE ROD SCHEDULE

PIPE SIZE (INCHES)	MINIMUM PRESSURE (PSI) (NOTE 1)	TIE RODS		PIPE SPACERS		
		NO. OF RODS (NOTE 2)	DIA OF RODS (INCHES)	DIA OF SPACERS (INCHES)	LENGTH=C (INCHES)	PIPE SCHEDULE
4	350 OR LESS	2	3/4	1	2 1/2	40
6	250 OR LESS 350	2 4	3/4	1	2 1/2	40
8	150 OR LESS 300 350	2 4 6	3/4	1	2 1/2	40
10	200 OR LESS 350	2 4	3/4	1	2 1/2	80
12	150 OR LESS 300 350	2 4 6	3/4	1	2 1/2	80
14	100 OR LESS 200 350	2 4 6	3/4	1	3 1/2	80
16	75 OR LESS 150 250 350	2 4 6 8	3/4	1	3 1/2	80
18	75 OR LESS 150 200 300 350	2 4 6 8 10	3/4	1	3 1/2	80
20	50 OR LESS 100 150 200 300 350	2 4 6 8 10 12	3/4	1	3 1/2	80
24	75 OR LESS 100 150 200 250 300 350	4 6 8 10 12 14 16	3/4	1	3 1/2	80
30	50 OR LESS 100 150 200 250	4 8 10 12 16	1	1 1/4	4	80
36	50 OR LESS 100 150 200 250	4 8 12 18 22	1	1 1/4	4	80
42	50 OR LESS 100 150 200 250	4 8 12 16 20	1 1/4	1 1/2	4	80
48	100 OR LESS 150 200 250	12 16 22 28	1 1/4	1 1/2	4	80

DIP MECHANICAL JOINT COUPLING WITH TIE RODS (A)

NO SCALE

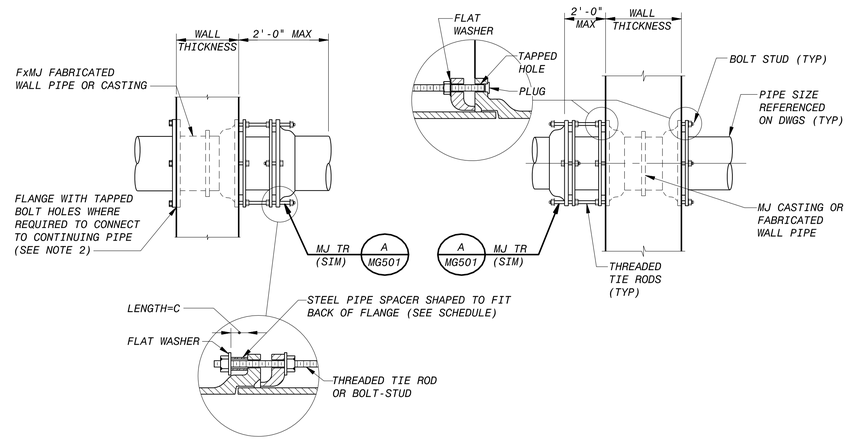

NOTES:

1. MECHANICAL JOINT OR PUSH-ON STYLE FITTINGS MAY BE FURNISHED WHERE RESTRAINED JOINTS ARE NOT CALLED FOR ON THE DRAWINGS OR SPECIFICATIONS.
2. EXCEPT WHERE TIE RODS ARE REQUIRED, BOLTS FOR FOLLOWER RINGS SHALL BE BOLT-STUDS ON WALL PIPE. ALL BOLT HOLES IN WALL PIPE SHALL BE TAPPED. WALL PIPES SHALL BE ORIENTED SO THAT THE BOLT HOLES STRADDLE THE TOP CENTERLINE.
3. USE WAX TO PROTECT ALL BURIED FERROUS SURFACES, INCLUDING PAINTED SURFACES. FOR PROTECTION OF ADJACENT PIPE BARREL SURFACES, SHRINK WRAP MAY BE USED IN LIEU OF WAX TAPE. SEE SPECIFICATIONS.
4. WHERE PIPE IS REQUIRED ON ONE SIDE ONLY, PROVIDE MJxPE WALL PIPE.

DIP MECHANICAL JOINT WALL PIPE WITH TIE RODS (B)

NO SCALE

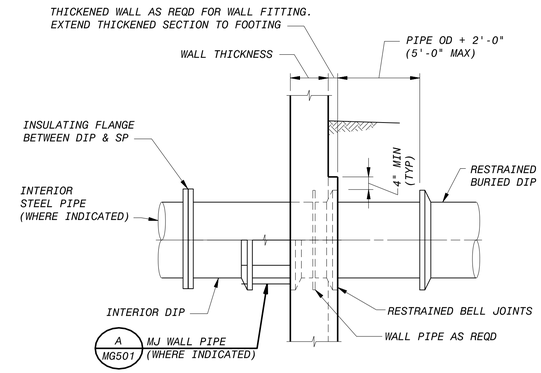

TYPICAL DIP WALL FITTING FOR BURIED PIPE (C)

NO SCALE

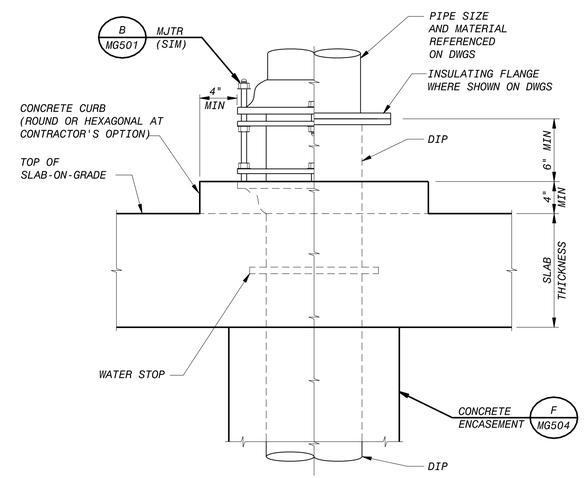

SLAB-ON-GRADE FLOOR PIPE (D)

NO SCALE

TIE ROD SCHEDULE			
PIPE SIZE (IN)	MAXIMUM PRESSURE (PSI) (NOTE 1)	TIE RODS NO. OF RODS (NOTE 2)	TIE RODS DIA (IN)
6	250 OR LESS	2	3/4
8	150 OR LESS	2	3/4
10	200 OR LESS	2	3/4
	350	6	3/4
12	150 OR LESS	2	3/4
	300	4	3/4
14	100 OR LESS	2	3/4
	200	4	3/4
16	75 OR LESS	2	3/4
	150	4	3/4
18	75 OR LESS	2	3/4
	150	4	3/4
20	50 OR LESS	2	3/4
24	75	4	3/4
30	50 OR LESS	4	1
36	50 OR LESS	4	1
	100	8	1
42	50 OR LESS	4	1 1/4

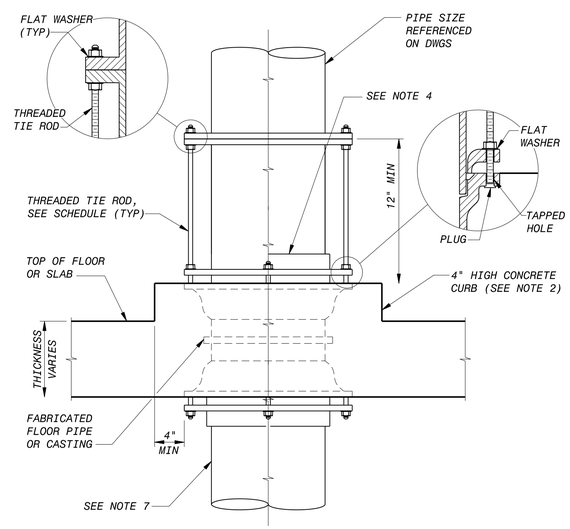

FLANGED - MECHANICAL JOINT FLOOR PIPE WITH TIE RODS (E)

NO SCALE

NOTES:

1. PRESSURE SHALL BE THE PRESSURE AT WHICH THE PIPE IS HYDROSTATICALLY TESTED, OR IF THERE IS NO HYDROSTATIC FIELD TEST, IT SHALL BE THE SPECIFIED SHOP TEST PRESSURE.
2. ORIENTATION OF FLOOR PIPE SHALL BE COORDINATED WITH CONNECTING PIPE AND TIE RODS, TIE RODS SHALL BE SPACED UNIFORMLY AROUND THE PIPE.
3. EXCEPT WHERE TIE RODS ARE REQUIRED, BOLTS FOR FOLLOWER RINGS SHALL BE BOLT-STUDS ON FLOOR PIPE. ALL BOLT HOLES IN FLOOR PIPE SHALL BE TAPPED. FLOOR PIPES SHALL BE ORIENTED SO THAT THE BOLT HOLES ALIGN WITH FLANGE BOLT HOLES.
4. CURB MAY BE ROUND OR HEXAGONAL AT CONTRACTOR'S OPTION.
5. WHERE PIPE IS REQUIRED ON ONE SIDE OF THE SLAB ONLY, PROVIDE A MJxPE FITTING.
6. SLAB-ON-GRADE APPLICATIONS REQUIRE CONCRETE ENCASEMENT OF BELOW FLOOR PIPING. RESTRAINED STYLE JOINTS ARE REQUIRED WHERE PIPE IS CONCRETE ENCASED.

PRELIMINARY - NOT FOR CONSTRUCTION

NO.	BY	CK	APP
A			

02/20/15 GMP DRAWINGS

DATE REVISIONS AND RECORD OF ISSUE

50.3070 - Mechanical Process Drawings

M-30-503.dwg

SAVED:KOE49353, 3/5/2015 12:41:32 PM

PLOTTED:

USER:KOE49353

XREF1:

XREF2:

XREF3:

XREF4:

DWG VER-1000

BLACK & VEATCH Building a world of difference.

Black & Veatch Corporation
Virginia Beach, VA

BEDFORD REGIONAL WATER AUTHORITY
SMITH MOUNTAIN LAKE WTP &
RAW WATER PUMPING STATION / INTAKE

MECHANICAL DETAILS

DESIGNED: ADE
DETAILED: VVV
CHECKED:
APPROVED:
DATE: DECEMBER 2014

0 1/2 1
IF THIS BAR DOES NOT MEASURE 1" THEN DRAWING IS NOT TO FULL SCALE

PROJECT NO. 182262

M-30-503
SHEET OF

FD7000
D7000

STEEL PIPE TIE BOLT SCHEDULE FOR HARNESSED JOINTS

NOMINAL PIPE SIZE (in.)	PRESSURE (psi) (NOTE 1)	LUG TYPE	TIE BOLT DIA. (in.)	NO. BOLTS (NOTE 3)
6	250 OR LESS	P	5/8	2
8	250 OR LESS	P	5/8	2
10	50	P	5/8	2
	100	P	5/8	2
	150	P	5/8	2
	200	P	3/4	2
12	50	P	5/8	2
	100	P	5/8	2
	150	P	3/4	2
	200	P	3/4	2
14	50	RR	5/8	2
	100	RR	5/8	2
	150	RR	3/4	2
	200	RR	7/8	2
16	50	RR	5/8	2
	100	RR	3/4	2
	150	RR	7/8	2
	200	RR	1	2
18	50	RR	5/8	2
	100	RR	7/8	2
	150	RR	1	2
	200	RR	1 1/4	2
20	50	RR	5/8	2
	100	RR	7/8	2
	150	RR	1 1/8	2
	200	RR	1 1/4	2
24	50	RR	3/4	2
	100	RR	3/4	4
	150	RR	1	4
	200	RR	1 1/8	4
30	50	RR	3/4	4
	100	RR	1	4
	150	RR	1 1/8	4
	200	RR	1 1/4	4
36	50	RR	7/8	4
	100	RR	1 1/8	4
	150	RR	1 3/8	4
	200	RR	1 1/4	6
42	50	RR	7/8	4
	100	RR	1 1/4	4
	150	RR	1 1/4	6
	200	RR	1 1/2	6

NOTES:

1. PRESSURE SHALL BE THE PRESSURE AT WHICH THE PIPE IS HYDROSTATICALLY TESTED, OR IF THERE IS NO HYDROSTATIC FIELD TEST, IT SHALL BE THE SPECIFIED SHOP TEST PRESSURE.
2. NUMBER OF TIE BOLTS IS BASED ON AN ALLOWABLE STRESS ON NET TENSION AREA OF 40,000 PSI.
3. UNLESS OTHERWISE INDICATED, TIE BOLTS SHALL BE SPACED UNIFORMLY AROUND THE PIPE, BEGINNING WITH THE FIRST TWO AT THE HORIZONTAL ℄ OF THE PIPE, SUBJECT TO THE APPROVAL OF THE ENGINEER.

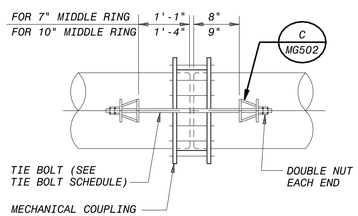

STEEL PIPE HARNESSED MECHANICAL COUPLING WITH TYPE P LUGS (A)
NO SCALE

NOTE:

1. THE PIPE FOR LUG DESIGN SHALL INCLUDE WRAPPERS OR PADS OR PIPE WALL THICKNESS INCREASED AS REQUIRED TO MEET MINIMUM PIPE THICKNESS IN ACCORDANCE WITH AWWA M-11 DESIGN REQUIREMENTS.

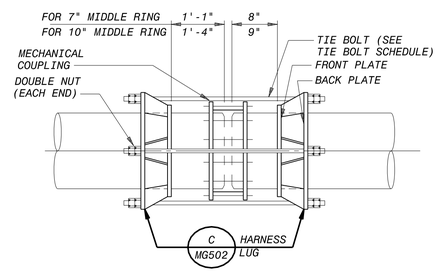

STEEL PIPE HARNESSED MECHANICAL COUPLING WITH TYPE RR LUGS (B)
NO SCALE

NOTE:

1. THE PIPE FOR LUG DESIGN SHALL INCLUDE WRAPPERS OR PADS OR PIPE WALL THICKNESS INCREASED AS REQUIRED TO MEET MINIMUM PIPE THICKNESS IN ACCORDANCE WITH AWWA M-11 DESIGN REQUIREMENTS.

DIMENSIONS IN INCHES

TIE BOLT DIA	T	A	Y	W	X	HB	E	HF	HOLE DIA
5/8	3/8	5	5	1 3/8	5	3 7/8	3	2	3/4
3/4	3/8	5	5	1 1/2	5	4 1/8	3 1/8	2	7/8
7/8	1/2	5 1/2	5	1 5/8	5	4 1/4	3 1/8	2	1
1	1/2	5 3/4	RING	1 3/4	RING	4 1/2	3 1/4	2	1 1/8
1 1/8	1/2	7	RING	1 7/8	RING	4 3/4	3 5/8	2 1/2	1 1/4
1 1/4	5/8	7 1/2	RING	2	RING	5	3 3/4	2 1/2	1 3/8

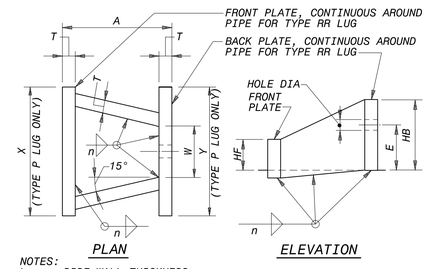

NOTES:
1. n = PIPE WALL THICKNESS
2. FOR HARNESS LUG TYPE RR, THE GUSSET PLATES BETWEEN THE FRONT PLATE AND THE BACK PLATE MAY BE PERPENDICULAR TO THE FRONT AND BACK PLATES WITH A MINIMUM CLEAR DISTANCE BETWEEN EACH PAIR OF GUSSET PLATES OF DIMENSION W.

STEEL PIPE HARNESS LUG DETAIL (C MG502)
NO SCALE

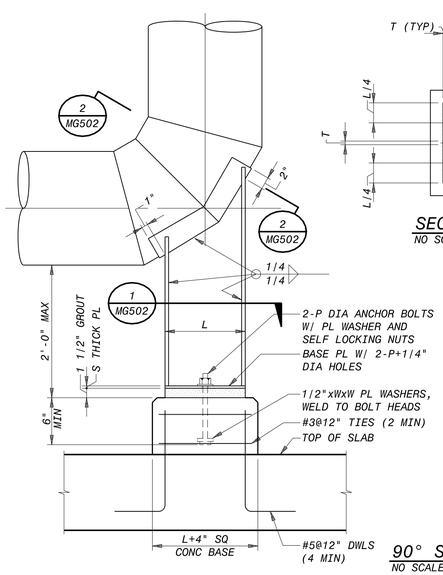

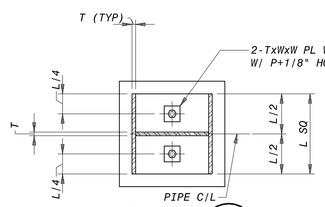

SECTION (1 MG502)
NO SCALE

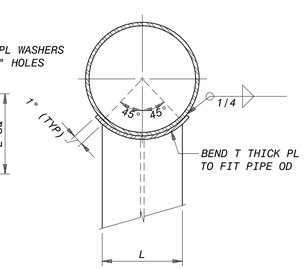

SECTION (2 MG502)
NO SCALE

DIMENSIONS IN INCHES

PIPE SIZE	T	S	W	P
12-16	1/4	3/8	1 3/4	3/4
18-24	1/4	3/8	2 1/2	3/4
30-36	3/8	1/2	3 1/2	3/4
42	7/16	5/8	4	3/4
48	1/2	5/8	4	3/4
54	9/16	3/4	4	1
60	5/8	7/8	4	1
OVER 60	3/4	1	4	1

L = PIPE O.D. x (sin 45)

90° STEEL PIPE BASE ELBOW SUPPORT (D)
NO SCALE

PRELIMINARY - NOT FOR CONSTRUCTION

NO.	BY	CK	APP
A			

02/20/15 GMP DRAWINGS
DATE REVISIONS AND RECORD OF ISSUE

50-3070 - Mechanical Process Drawings
M-30-504.dwg

SAVED: KOE49353, 3/5/2015 12:43:25 PM
PLOTTED:
USER: KOE49353 DWG VER: 1000

XREF1:
XREF2:
XREF3:
XREF4:

BLACK & VEATCH
Building a world of difference.
Black & Veatch Corporation
Virginia Beach, VA

BEDFORD REGIONAL WATER AUTHORITY
SMITH MOUNTAIN LAKE WTP &
RAW WATER PUMPING STATION / INTAKE

MECHANICAL DETAILS

DESIGNED: ADE
DETAILED: VVV
CHECKED:
APPROVED:
DATE: DECEMBER 2014

0 1/2 1
IF THIS BAR DOES NOT MEASURE 1" THEN DRAWING IS NOT TO FULL SCALE

PROJECT NO.
182262

M-30-504
SHEET
OF

FD7000
D7000

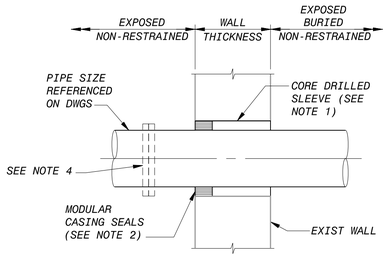

NOTES:

1. CORE DRILL SMOOTH WALL OPENING, COORDINATE CORE DIAMETER AS REQUIRED WITH CASING SEAL MANUFACTURER. MAXIMUM CORE DIAMETER SHALL BE 12".
2. WHEN SOIL MAY BE PRESENT, USE TWO SETS OF CASING SEALS. ONE AT EACH FACE OF WALL.
3. FIRESAFING TO BE PROVIDED AT ALL RATED WALLS INDICATED ON THE DRAWINGS AND INSTALLED PER ACCEPTED UL RATED SYSTEM.
4. TO MINIMIZE SLEEVE SIZE, PROVIDE A SCREW-ON FLANGE, GROOVED COUPLING, OR MECHANICAL COUPLING WITH ANCHOR STUDS ON ONE SIDE OF OPENING.
5. FOR BURIED PIPING, CONTRACTOR SHALL PROVIDE AN ADDITIONAL FIELD JOINT AS CLOSE AS PRACTICAL TO FACE OF WALL, BUT NO MORE THAN 5 FEET.
6. USE WAX TAPE TO PROTECT ALL BURIED FERROUS SURFACES INCLUDING PAINTED SURFACES. FOR PROTECTION OF ADJACENT PIPE BARREL SURFACES, SHRINK WRAP MAY BE USED IN LIEU OF WAX TAPE. SEE SPECIFICATIONS.

CORE DRILLED WALL SLEEVE (A)
NO SCALE

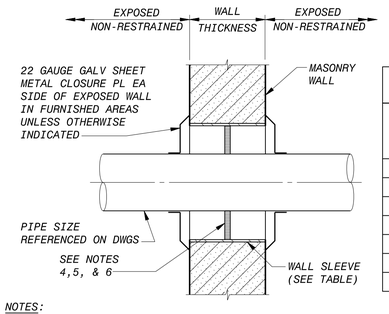

WALL SLEEVE TABLE	
PIPE SIZE	SLEEVE SIZE UNLESS OTHERWISE INDICATED (SEE NOTES 3 & 4)
1"& SMALLER	3"
1 1/4"&1 1/2"	3 1/2"
2" & 2 1/2"	4"
3"	6"
4"	6"
6"	8"
8"& LARGER	PIPE OD+2"±

NOTES:

1. SCHEDULE 40 GALV STEEL PIPE FOR PIPING SMALLER THAN 3", SCHEDULE 20 GALV STEEL PIPE FOR PIPING SMALLER THAN 6", AND GALV 1/4" MINIMUM WALL THICKNESS FOR PIPING LARGER THAN 6".
2. FOR PIPING LARGER THAN 3" PROVIDE PIPE SUPPORT WITHIN 3' OF WALL SLEEVE TO PREVENT THE TRANSFER OF PIPE LOADS TO MASONRY WALL WHEN MODULAR CASING SEALS ARE USED.
3. WHERE REQUIRED, USE SLEEVE LARGE ENOUGH FOR FLANGE OR OTHER JOINT RESTRAINT TO PASS THROUGH.
4. FOR PIPE SIZES 1 1/2" IN DIAMETER AND SMALLER, CAULK ANNULAR SPACE AROUND PIPE. FOR PIPE LARGER THAN 1 1/2" IN DIAMETER, USE MODULAR CASING SEALS AND COORDINATE SLEEVE SIZE WITH CASING SEAL MANUFACTURER.
5. PROVIDE MODULAR CASING SEALS ON ALL SLEEVES AT CHLORINE AND AMMONIA FEED AND STORAGE ROOMS AND WHERE INDICATED ON THE DRAWINGS. COORDINATE SLEEVE SIZE WITH CASING SEAL MANUFACTURER.
6. FIRESAFING TO BE PROVIDED AT ALL RATED WALLS INDICATED ON THE DRAWINGS AND INSTALLED PER ACCEPTED UL RATED SYSTEMS.

MASONRY WALL SLEEVE (B)
NO SCALE

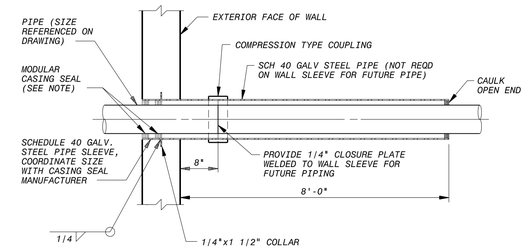

NOTE: PROVIDE 2 SEALS FOR WALLS 12" AND WIDER.

EXTERIOR WALL SLEEVE FOR PLASTIC PIPE (C)
NO SCALE

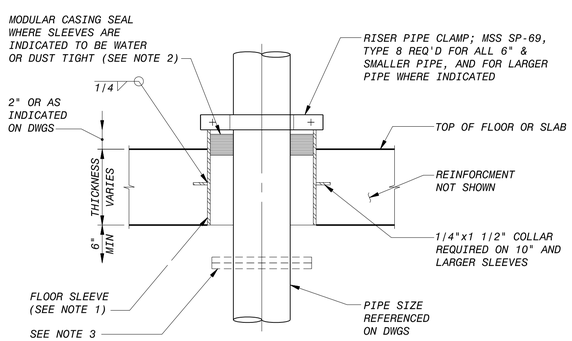

NOTES:

1. FLOOR SLEEVE, SCHEDULE 40 STEEL PIPE FOR 12" AND SMALLER SLEEVES, 1/4" STEEL PIPE FOR SLEEVES LARGER THAN 12", AND HOT DIP GALVANIZE AFTER FABRICATION. COORDINATE SIZE OF SLEEVE WITH MODULAR SEAL MANUFACTURER.
2. FIRESAFING TO BE PROVIDED AT ALL RATED LOCATIONS INDICATED ON THE DRAWINGS AND INSTALLED PER ACCEPTED UL RATED SYSTEMS.
3. TO MINIMIZE SLEEVE SIZE PROVIDE A SCREW-ON FLANGE, GROOVED COUPLING, OR MECHANICAL COUPLING WITH ANCHOR STUDS ON ONE SIDE OF OPENING.

STEEL FLOOR SLEEVE (D)
NO SCALE

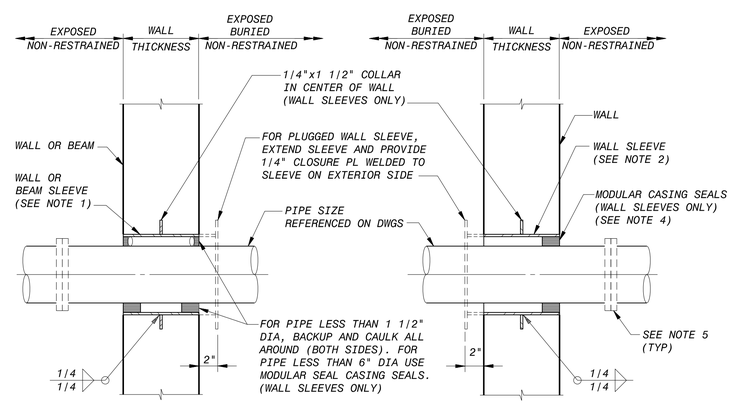

NOTES:

1. SCHEDULE 40 GALV STEEL PIPE SLEEVE. SIZE TO PROVIDE 3/4" ANNULAR SPACE AROUND PIPE FOR ALL BEAM SLEEVES AND FOR WALL SLEEVES FOR PIPES SMALLER THAN 1 1/2" DIAMETER. FOR PIPE SMALLER THAN 6" DIAMETER, COORDINATE WALL SLEEVE DIAMETER WITH MODULAR CASING SEAL MANUFACTURER.
2. WALL SLEEVE, SCHEDULE 40 STEEL PIPE FOR 12" AND SMALLER SLEEVES, 1/4" STEEL PIPE FOR SLEEVES LARGER THAN 12", AND HOT DIP GALVANIZED AFTER FABRICATION, 304 SS, OR OTHER MATERIAL AS SPECIFIED OR INDICATED ON DRAWINGS. COORDINATE WALL SLEEVE DIAMETER WITH MODULAR CASING SEAL MANUFACTURER.
3. FIRESAFING TO BE PROVIDED AT ALL RATED WALLS INDICATED ON THE DRAWINGS AND INSTALLED PER ACCEPTED UL RATED SYSTEM.
4. WHERE SOIL MAY BE PRESENT, USE TWO SETS OF CASING SEALS. ONE AT EACH FACE OF WALL.
5. TO MINIMIZE SLEEVE SIZE, PROVIDE A SCREW-ON FLANGE, GROOVED COUPLING, OR MECHANICAL COUPLING WITH ANCHOR STUDS ON ONE SIDE OF OPENING.
5. FOR BURIED PIPING, CONTRACTOR SHALL PROVIDE AN ADDITIONAL FIELD JOINT AS CLOSE AS PRACTICAL TO FACE OF WALL, BUT NO MORE THAN 5 FEET.
6. USE WAX TAPE TO PROTECT ALL BURIED FERROUS SURFACES INCLUDING PAINTED SURFACES. FOR PROTECTION OF ADJACENT PIPE BARREL SURFACES, SHRINK WRAP MAY BE USED IN LIEU OF WAX TAPE. SEE SPECIFICATIONS.

CONCRETE WALL OR BEAM SLEEVE (E)
NO SCALE

PRELIMINARY - NOT FOR CONSTRUCTION

NO.	BY	CK	APP
A			

02/20/15 GMP DRAWINGS
DATE REVISIONS AND RECORD OF ISSUE

50.3070 - Mechanical Process Drawings
M-30-505.dwg
SAVED:KOE49353, 3/5/2015 12:45:21 PM
PLOTTED:
USER:KOE49353 DWG VER:1000
XREF1:
XREF2:
XREF3:
XREF4:

BLACK & VEATCH Building a world of difference.
Black & Veatch Corporation
Virginia Beach, VA

BEDFORD REGIONAL WATER AUTHORITY
SMITH MOUNTAIN LAKE WTP &
RAW WATER PUMPING STATION / INTAKE

MECHANICAL DETAILS

DESIGNED: ADE
DETAILED: VVV
CHECKED:
APPROVED:
DATE: DECEMBER 2014

0 1/2 1
IF THIS BAR DOES NOT MEASURE 1" THEN DRAWING IS NOT TO FULL SCALE

PROJECT NO. 182262

M-30-505
SHEET
OF

FD7000
D7000

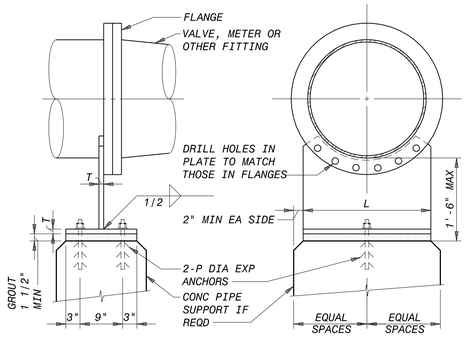

PIPE SIZE	T	P	L
<20	5/8"	5/8"	PIPE OD
20	3/4"	3/4"	18"
24	3/4"	3/4"	21"
30	3/4"	3/4"	27"
36	3/4"	3/4"	33"
42	3/4"	3/4"	36"
48	3/4"	3/4"	42"
54	3/4"	3/4"	44"
60	3/4"	3/4"	50"

FLANGE PIPE SUPPORT (A)
NO SCALE

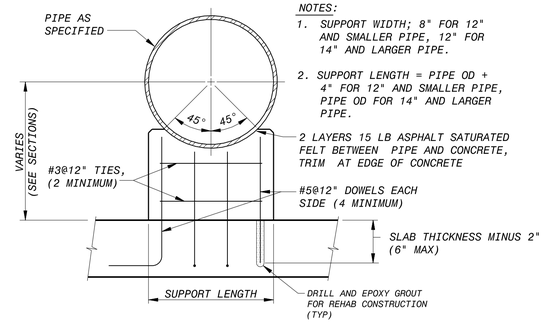

NOTES:
1. SUPPORT WIDTH; 8" FOR 12" AND SMALLER PIPE, 12" FOR 14" AND LARGER PIPE.
2. SUPPORT LENGTH = PIPE OD + 4" FOR 12" AND SMALLER PIPE, PIPE OD FOR 14" AND LARGER PIPE.

CONCRETE PIPE SUPPORT (B)
NO SCALE

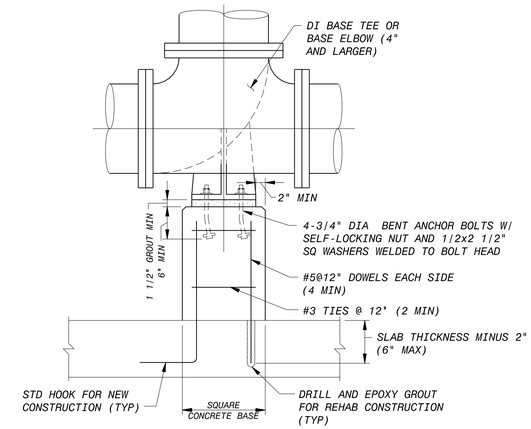

CONCRETE SUPPORT FOR CAST IRON BASE TEE OR BASE ELBOW (C)
NO SCALE

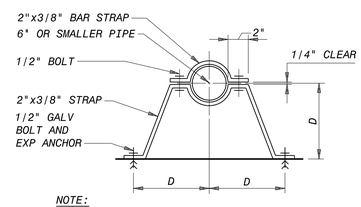

NOTE:
1. D=DISTANCE FROM WALL SHOWN ON PLAN OR SECTION.

VERTICAL PIPE - LATERAL SUPPORT (E)
NO SCALE

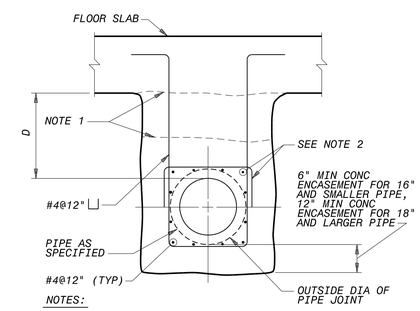

NOTES:
1. IF D IS LESS THAN 1'-6", PROVIDE ENCASEMENT CONTINUOUS TO SLAB. IF D IS GREATER THAN 1'-6", ENCASEMENT MAY BE SEPARATED FROM SLAB UNLESS OTHERWISE NOTED; ENCASEMENT MUST BE CONTINUOUS TO SLAB UNDER STRUCTURES SUPPORTED BY PIERS.
2. FOR D GREATER THAN 1'-6", #4 ⊔'S MAY BE SEPARATED FROM SLAB. PROVIDE #4 ⊓ @12" AND #4@12" HORIZONTAL BARS IN TOP OF ENCASEMENT.
3. WHERE PIPELINE CHANGES FROM AN ENCASED PIPELINE TO A BURIED PIPELINE, PROVIDE A BELL IN THE END OF ENCASEMENT FOR DIP AND PCCP AND A MECHANICAL COUPLING 2 FT FROM END OF ENCASEMENT FOR STEEL PIPE OPTION, EXCEPT IN LOCATIONS WHERE AN INSULATING FLANGE IS INDICATED ON THE DRAWINGS.

CONCRETE ENCASEMENT (F)
NO SCALE

PRELIMINARY - NOT FOR CONSTRUCTION

NO.	BY	CK	APP
A			

DATE	REVISIONS AND RECORD OF ISSUE
02/20/15	GMP DRAWINGS

50-3070 - Mechanical Process Drawings
M-30-506.dwg
SAVED: VAH16843, 12/29/2014 9:13:00 AM
PLOTTED:
USER: ADE49353
XREF1:
XREF2:
XREF3:
XREF4:
DWG VER: 1000

BLACK & VEATCH
Building a world of difference.
Black & Veatch Corporation
Virginia Beach, VA

BEDFORD REGIONAL WATER AUTHORITY
SMITH MOUNTAIN LAKE WTP &
RAW WATER PUMPING STATION / INTAKE

MECHANICAL DETAILS

DESIGNED: ADE
DETAILED: VVV
CHECKED:
APPROVED:
DATE: DECEMBER 2014

0 1/2 1
IF THIS BAR DOES NOT MEASURE 1" THEN DRAWING IS NOT TO FULL SCALE

PROJECT NO.
182262

M-30-506
SHEET
OF

FD7000
D7000

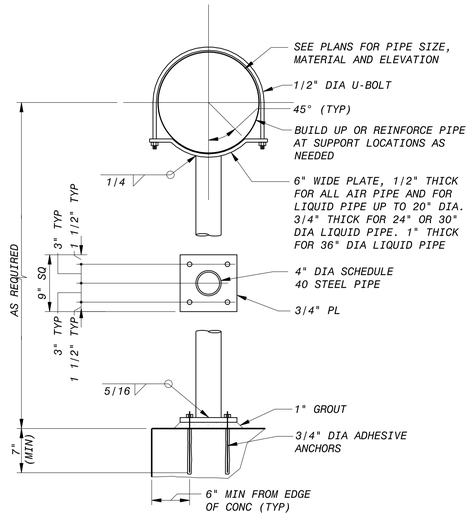

NOTE:
1. ALL STEEL MATERIALS SHALL BE HOT-DIP GALVANIZED FOR EXTERIOR LOCATIONS. VENT HOLES FOR GALVANIZING SHALL BE THE MINIMUM SIZE NECESSARY. HOLES SHALL BE LOCATED IN THE BOTTOM BASEPLATE AND ALSO LOCATED IN THE TOP OF THE PIPE, ADJACENT TO THE CURVED PLATE.

4 INCH DIAMETER STEEL COLUMN PIPE SUPPORT (A)

1" = 1'-0"

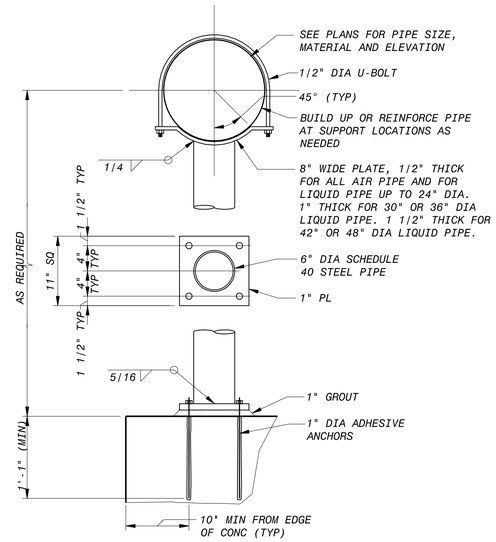

NOTE:
1. ALL STEEL MATERIALS SHALL BE HOT-DIP GALVANIZED FOR EXTERIOR LOCATIONS. VENT HOLES FOR GALVANIZING SHALL BE THE MINIMUM SIZE NECESSARY. HOLES SHALL BE LOCATED IN THE BOTTOM BASEPLATE AND ALSO LOCATED IN THE TOP OF THE PIPE, ADJACENT TO THE CURVED PLATE.

6 INCH DIAMETER STEEL COLUMN PIPE SUPPORT (B)

1" = 1'-0"

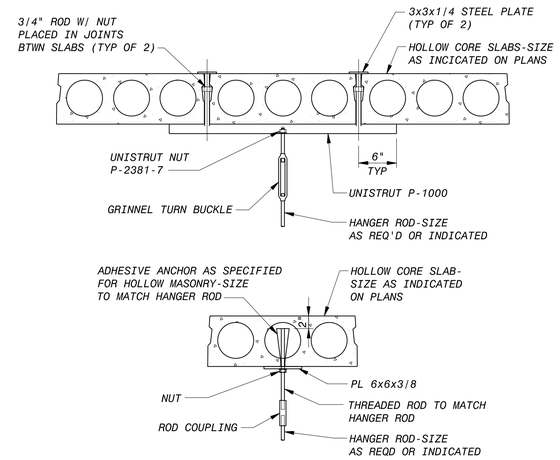

PIPE HANGER SUPPORT DETAILS (C)

1" = 1'-0"

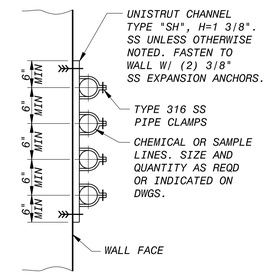

CHEMICAL AND SAMPLE LINE SUPPORT (D)

NO SCALE

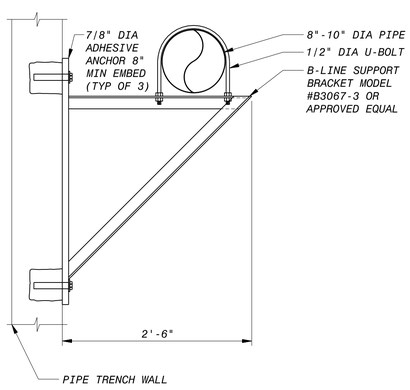

PIPE TRENCH - PIPE SUPPORT BRACKET (E)

1" = 1'-0"

PRELIMINARY - NOT FOR CONSTRUCTION

NO.	BY	CK	APP
A			

REVISIONS AND RECORD OF ISSUE

DATE	
02/20/15	GMP DRAWINGS

50-3070 - Mechanical Process Drawings
M-30-507.dwg
SAVED: VAN16843, 12/29/2014 9:18:51 AM
PLOTTED:
USER: ADE4933 | DWG VER: 1000
XREF1:
XREF2:
XREF3:
XREF4:

BLACK & VEATCH
Building a world of difference.
Black & Veatch Corporation
Virginia Beach, VA.

BEDFORD REGIONAL WATER AUTHORITY
SMITH MOUNTAIN LAKE WTP &
RAW WATER PUMPING STATION / INTAKE

MECHANICAL DETAILS

DESIGNED: ADE
DETAILED: VVV
CHECKED:
APPROVED:
DATE: DECEMBER 2014

0 1/2 1
IF THIS BAR DOES NOT MEASURE 1" THEN DRAWING IS NOT TO FULL SCALE

PROJECT NO.
182262

M-30-507
SHEET
OF

FD7000
D7000

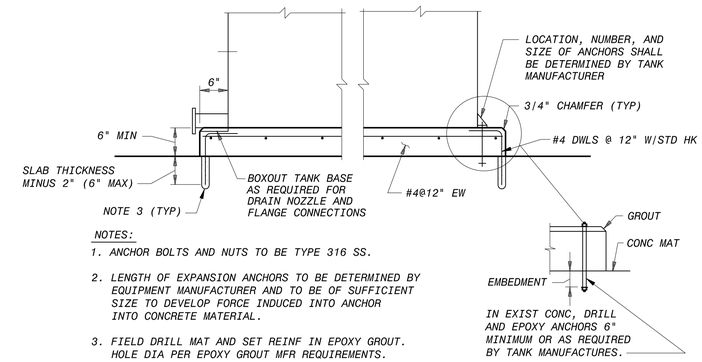

NOTES:

1. ANCHOR BOLTS AND NUTS TO BE TYPE 316 SS.
2. LENGTH OF EXPANSION ANCHORS TO BE DETERMINED BY EQUIPMENT MANUFACTURER AND TO BE OF SUFFICIENT SIZE TO DEVELOP FORCE INDUCED INTO ANCHOR INTO CONCRETE MATERIAL.
3. FIELD DRILL MAT AND SET REINF IN EPOXY GROUT. HOLE DIA PER EPOXY GROUT MFR REQUIREMENTS.

TANK BASE (C)

NO SCALE

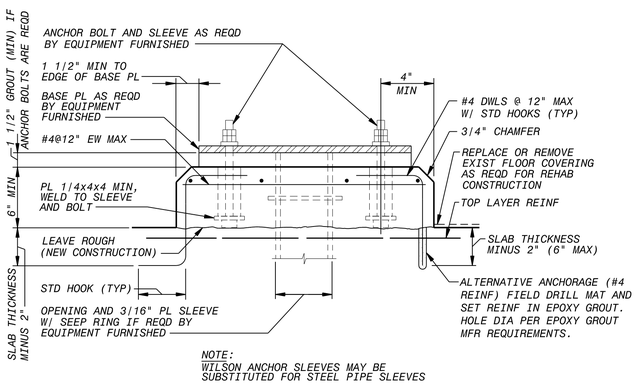

NOTE:
WILSON ANCHOR SLEEVES MAY BE
SUBSTITUTED FOR STEEL PIPE SLEEVES

EQUIPMENT BASE (D)

NO SCALE

PRELIMINARY - NOT FOR CONSTRUCTION

NO.	BY	CK	APP
A			

DATE	REVISIONS AND RECORD OF ISSUE
02/20/15	GMP DRAWINGS

50-3070 - Mechanical Process Drawings
M-30-508.dwg

XREF1:
XREF2:
XREF3:
XREF4:

SAVED: VAN16843, 12/29/2014 9:26:31 AM
PLOTTED:
USER: KOE49353 DWG VER: 1000

BLACK & VEATCH
Building a world of difference.
Black & Veatch Corporation
Virginia Beach, VA

BEDFORD REGIONAL WATER AUTHORITY
SMITH MOUNTAIN LAKE WTP &
RAW WATER PUMPING STATION / INTAKE

MECHANICAL DETAILS

DESIGNED: ADE
DETAILED: VVV
CHECKED:
APPROVED:
DATE: DECEMBER 2014

0 1/2 1
IF THIS BAR DOES NOT MEASURE 1" THEN DRAWING IS NOT TO FULL SCALE

PROJECT NO.
182262

M-30-508
SHEET
OF

FD7000
D7000

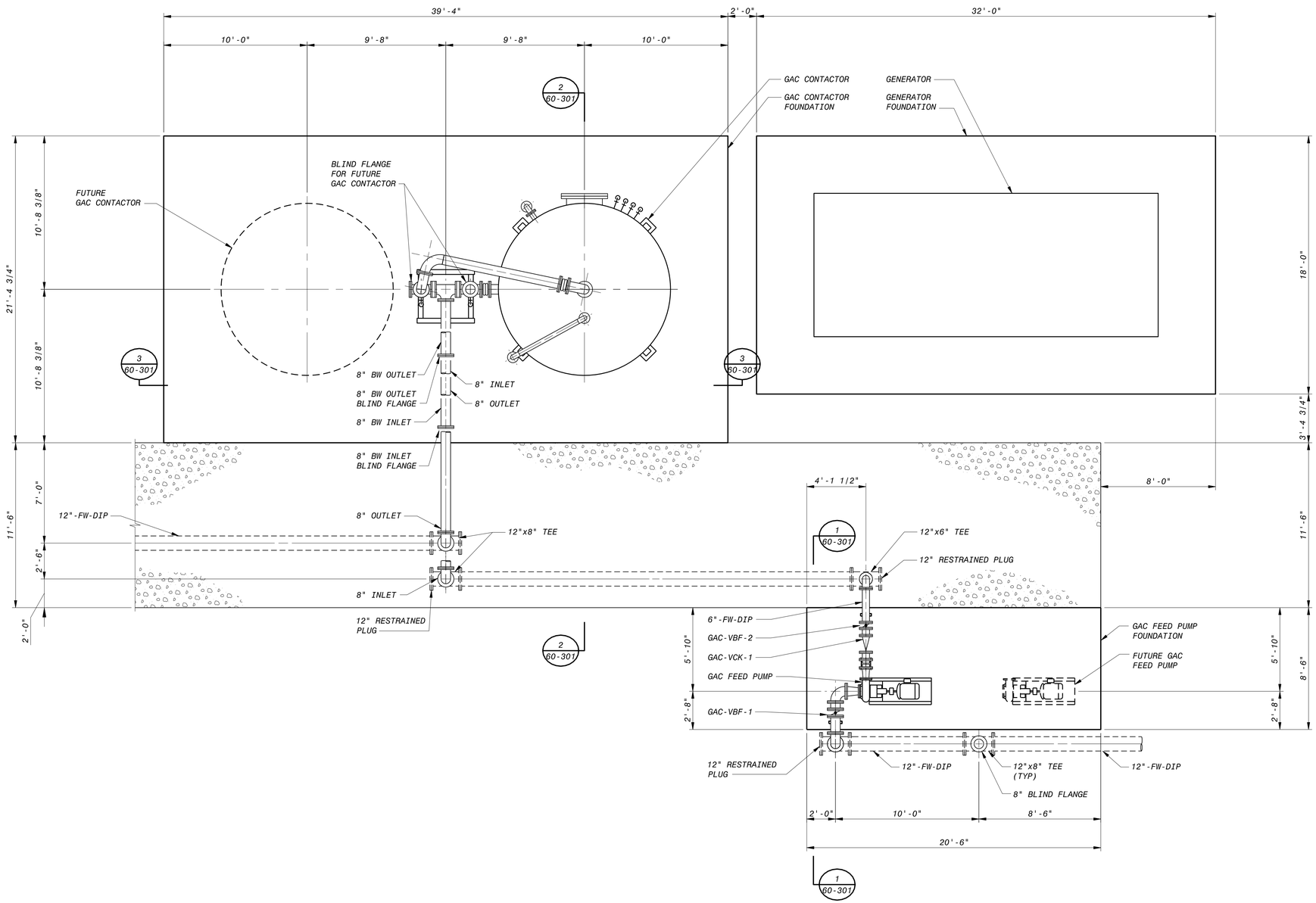

GAC CONTACTOR AND PUMP AREA - PLAN

1/4" = 1'-0"

4' 2' 0 4' 8'

1/4"=1'-0"

PRELIMINARY - NOT FOR CONSTRUCTION

NO.	BY	CK	APP
A			

DATE	REVISIONS AND RECORD OF ISSUE
02/20/15	GMP DRAWINGS

50-3070 - Mechanical Process Drawings

M-60-101.dwg

XREF1:
XREF2:
XREF3:
XREF4:

SAVED: KOE49353, 12/30/2014 8:02:36 AM
PLOTTED:
USER: KOE49353 DWG VER: 1000

BLACK & VEATCH
Building a world of difference.

Black & Veatch Corporation
Virginia Beach, VA

BEDFORD REGIONAL WATER AUTHORITY
SMITH MOUNTAIN LAKE WTP &
RAW WATER PUMPING STATION / INTAKE

MECHANICAL
GAC CONTACTOR AND PUMP AREA
PLAN

DESIGNED:
DETAILED:
CHECKED:
APPROVED:
DATE:

0 1/2 1

IF THIS BAR DOES NOT MEASURE 1" THEN DRAWING IS NOT TO FULL SCALE

PROJECT NO.
182262

M-60-101
SHEET
OF

FD7000
D7000

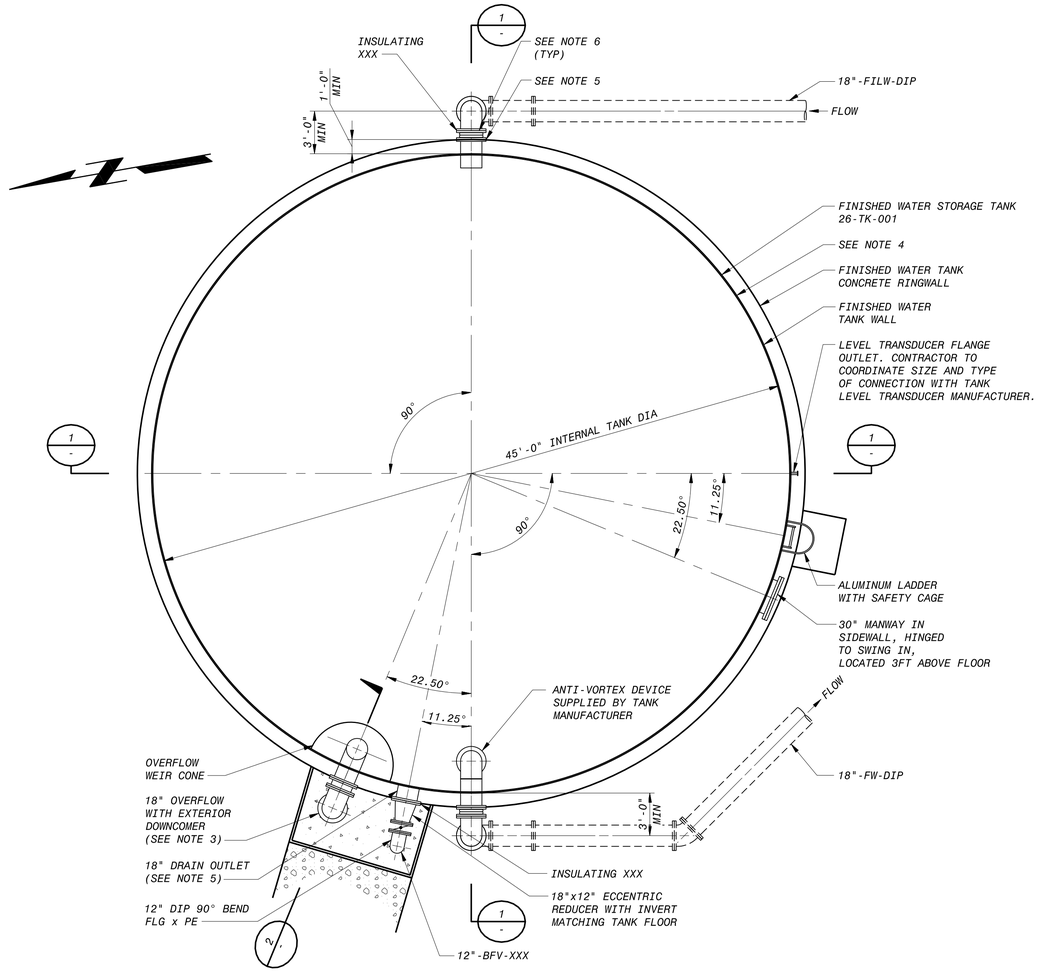

FINISHED WATER STORAGE TANK - SECTIONAL PLAN
3/16" = 1'-0"

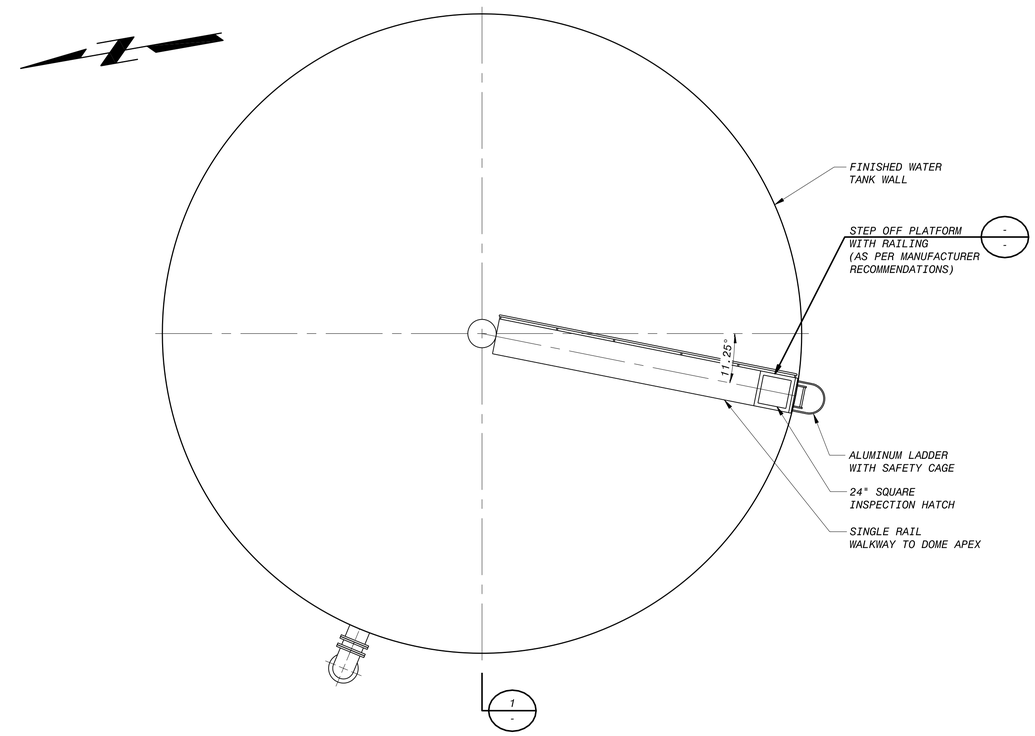

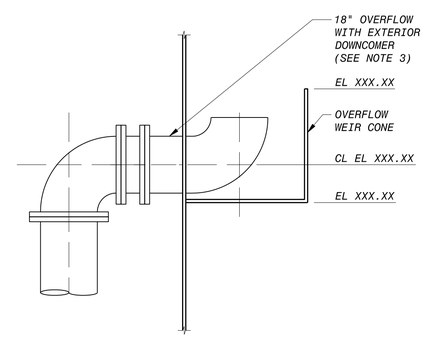

SECTION 2
1/2" = 1'-0"

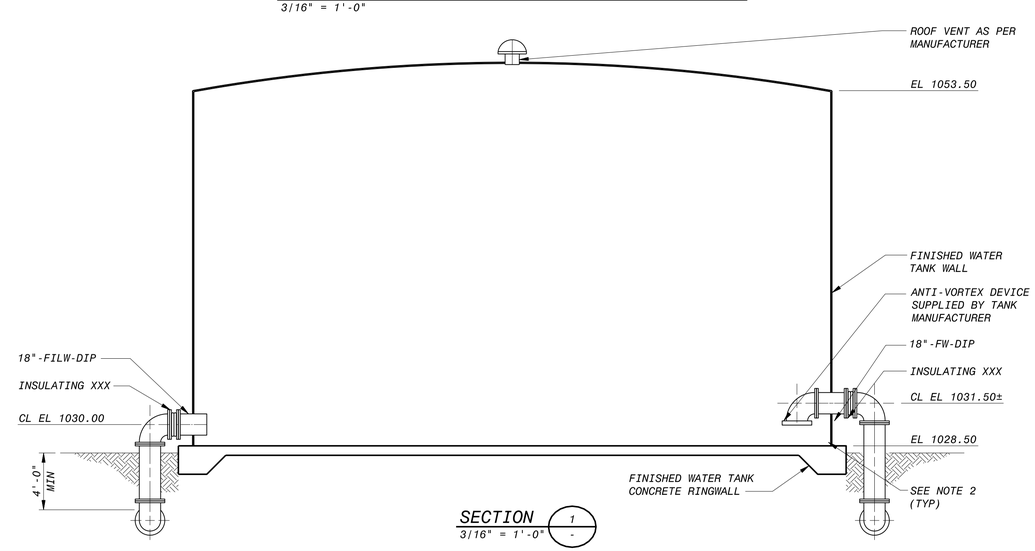

SECTION 1
3/16" = 1'-0"

NOTES:

1. CONCRETE RINGWALL/FOUNDATION SHALL BE DESIGNED BY TANK MANUFACTURER.
2. PLATE REINFORCING AT OUTLETS SHALL BE PER TANK MANUFACTURER'S RECOMMENDATIONS.
3. ALL SUPPORTS ON TANK FOR PIPE AND APPURTENANCES SHALL BE DESIGNED AND FURNISHED BY TANK MANUFACTURER.
4. SIZE AND LOCATION AND NUMBER OF ANCHORS AND MINIMUM EMBEDMENTS SHALL BE DETERMINED BY TANK MANUFACTURER.
5. PIPE COATINGS SYSTEM SHALL MATCH TANK INTERIOR AND EXTERIOR COATING SYSTEMS. ALL EXPOSED PIPE TO BE COATED.
6. CONTRACTOR TO INSTALL FLEXIBLE EXPANSION JOINT AND INSULATING XXX PER MANUFACTURER'S RECOMMENDATIONS.
7. TANK MANUFACTURER SHALL PROVIDE INTERIOR BAFFLES FOR A MINIMUM 0.5 BAFFLING FACTOR.

6' 4' 2' 0 5' 10' 15'
1/2"=1'-0"

6' 4' 2' 0 5' 10'
3/16"=1'-0"

PRELIMINARY - NOT FOR CONSTRUCTION

NO.	BY	CK	APP
A			

DATE	REVISIONS AND RECORD OF ISSUE
02/20/15	GMP DRAWINGS

50.3070 - Mechanical Process Drawings
M-80-101.dwg

XREF1:
XREF2:
XREF3:
XREF4:

SAVED: KOE49353, 3/5/2015 12:56:47 PM
PLOTTED:
USER: KOE49353 DWG VER: 1000

BLACK & VEATCH
Building a world of difference.
Black & Veatch Corporation
Virginia Beach, VA

BEDFORD REGIONAL WATER AUTHORITY
SMITH MOUNTAIN LAKE WTP &
RAW WATER PUMPING STATION / INTAKE

MECHANICAL
FINISHED WATER STORAGE TANK
PLAN AND SECTION

DESIGNED:
DETAILED:
CHECKED:
APPROVED:
DATE:

0 1/2 1
IF THIS BAR DOES NOT MEASURE 1" THEN DRAWING IS NOT TO FULL SCALE

PROJECT NO.
182262

M-80-101
SHEET
OF

FD7000
D7000

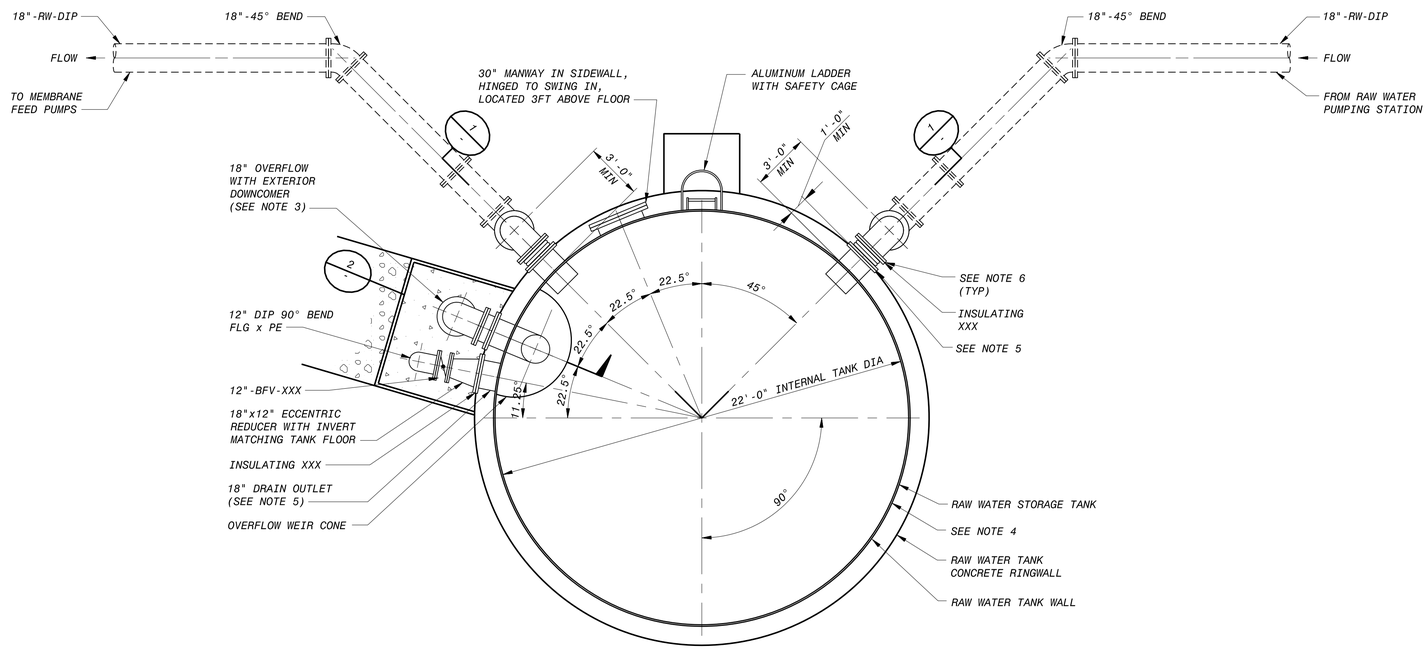

RAW WATER STORAGE TANK - SECTIONAL PLAN
1/4" = 1'-0"

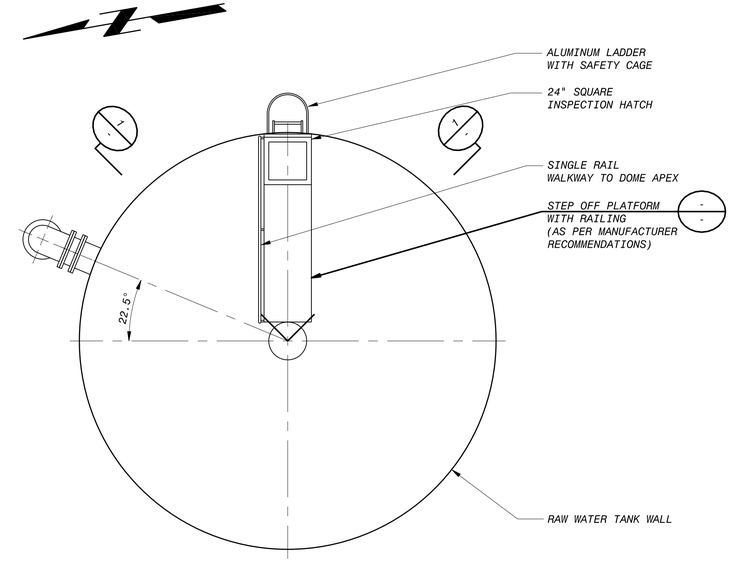

ROOF PLAN
1/4" = 1'-0"

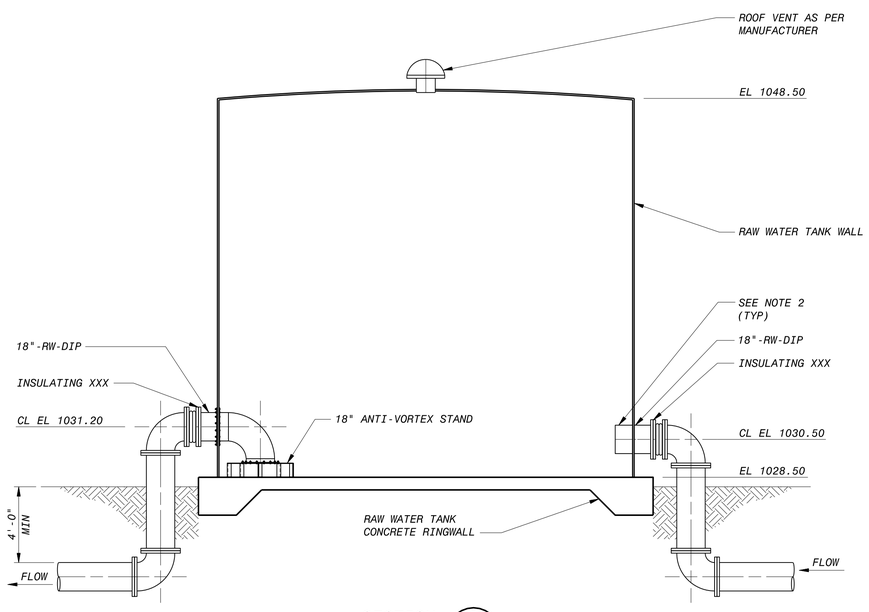

SECTION 1/ -
1/4" = 1'-0"

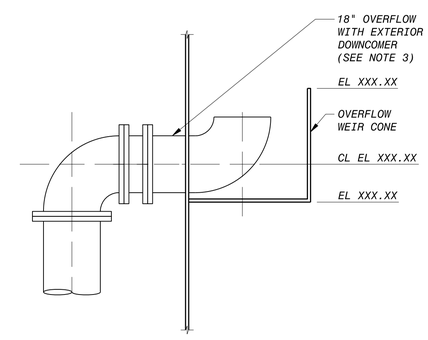

SECTION 2/ -
1/2" = 1'-0"

NOTES:

1. CONCRETE RINGWALL/FOUNDATION SHALL BE DESIGNED BY TANK MANUFACTURER.
2. PLATE REINFORCING AT OUTLETS SHALL BE PER TANK MANUFACTURER'S RECOMMENDATIONS.
3. ALL SUPPORTS ON TANK FOR PIPE AND APPURTENANCES SHALL BE DESIGNED AND FURNISHED BY TANK MANUFACTURER.
4. SIZE AND LOCATION AND NUMBER OF ANCHORS AND MINIMUM EMBEDMENTS SHALL BE DETERMINED BY TANK MANUFACTURER.
5. PIPE COATINGS SYSTEM SHALL MATCH TANK INTERIOR AND EXTERIOR COATING SYSTEMS. ALL EXPOSED PIPE TO BE COATED.
6. CONTRACTOR TO INSTALL FLEXIBLE EXPANSION JOINT AND INSULATING XXX PER MANUFACTURER'S RECOMMENDATIONS.

6' 4' 2' 0 5' 10' 15'
1/2"=1'-0"

4' 2' 0 4' 8'
1/4"=1'-0"

PRELIMINARY - NOT FOR CONSTRUCTION

NO.	BY	CK	APP	REVISIONS AND RECORD OF ISSUE
A				02/20/15 GMP DRAWINGS

50-3070 - Mechanical Process Drawings
M-85-101.dwg
SAVED: VAN16843, 12/30/2014 12:22:30 PM
PLOTTED:
USER: KOE49353
XREF1:
XREF2:
XREF3:
XREF4:
DWG VER: 1000

BLACK & VEATCH
Building a world of difference.
Black & Veatch Corporation
Virginia Beach, VA

BEDFORD REGIONAL WATER AUTHORITY
SMITH MOUNTAIN LAKE WTP &
RAW WATER PUMPING STATION / INTAKE

MECHANICAL
RAW WATER STORAGE TANK
PLAN AND SECTION

DESIGNED:
DETAILED:
CHECKED:
APPROVED:
DATE:

0 1/2 1
IF THIS BAR DOES NOT MEASURE 1" THEN DRAWING IS NOT TO FULL SCALE

PROJECT NO.
182262

M-85-101
SHEET
OF

FD7000
D7000

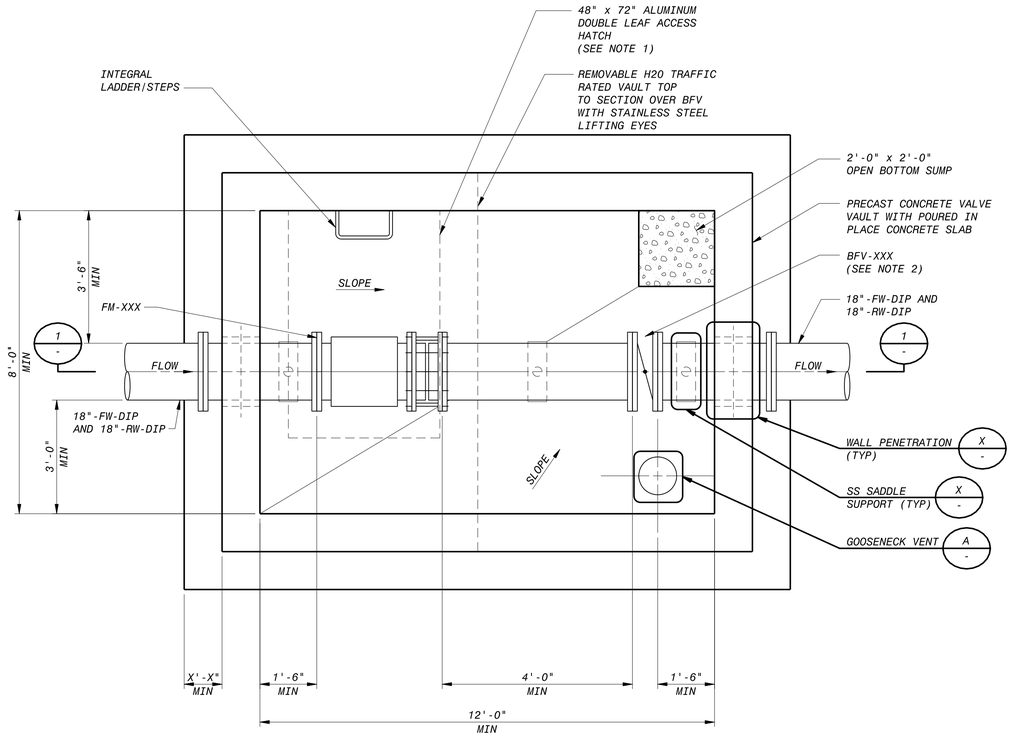

RAW WATER AND FINISHED WATER FLOW METER VAULTS - PLAN

1/2" = 1'-0"

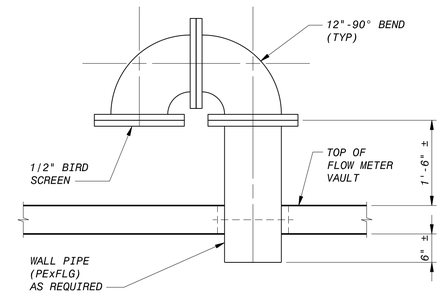

GOOSENECK VENT

NO SCALE

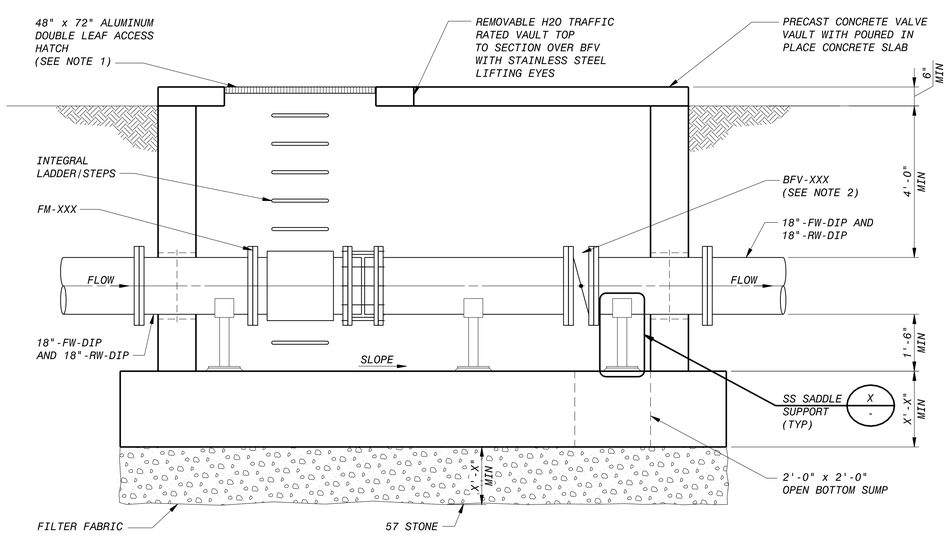

SECTION

1/2" = 1'-0"

NOTES:

1. ALUMINUM DOUBLE LEAF ACCESS HATCH SHALL BE BILCO MODEL JD-3AL H2O (OR APPROVED EQUAL) WITH ALL 316 STAINLESS STEEL HARDWARE, SLAM LOCK, SAFETY WET AND RECESSED PADLOCK HASP. HATCH DRAIN TO BE PIPED TO VAULT SUMP.

2. CONTRACTOR TO COORDINATE VALVE ACTUATOR ORIENTATION AND SIZE PRIOR TO ORDERING VAULT.

12" 6" 0 1' 2' 3' 4' 5'

1/2"=1'-0"

PRELIMINARY - NOT FOR CONSTRUCTION

NO.	BY	CK	APP
A			

DATE	REVISIONS AND RECORD OF ISSUE
02/20/15	GMP DRAWINGS

50.3070 - Mechanical Process Drawings

M-90-101.dwg

XREF1:
XREF2:
XREF3:
XREF4:

SAVED:KOE49353, 3/5/2015 1:05:53 PM
PLOTTED:
USER:KOE49353 DWG VER:1000

BLACK & VEATCH
Building a world of difference.
Black & Veatch Corporation
Virginia Beach, VA

BEDFORD REGIONAL WATER AUTHORITY
SMITH MOUNTAIN LAKE WTP &
RAW WATER PUMPING STATION / INTAKE

MECHANICAL
FLOW METER VAULT
PLAN, SECTION AND DETAILS

DESIGNED:
DETAILED:
CHECKED:
APPROVED:
DATE:

0 1/2 1
IF THIS BAR DOES NOT MEASURE 1" THEN DRAWING IS NOT TO FULL SCALE

PROJECT NO.
182262

M-90-101
SHEET
OF

FD7000
D7000

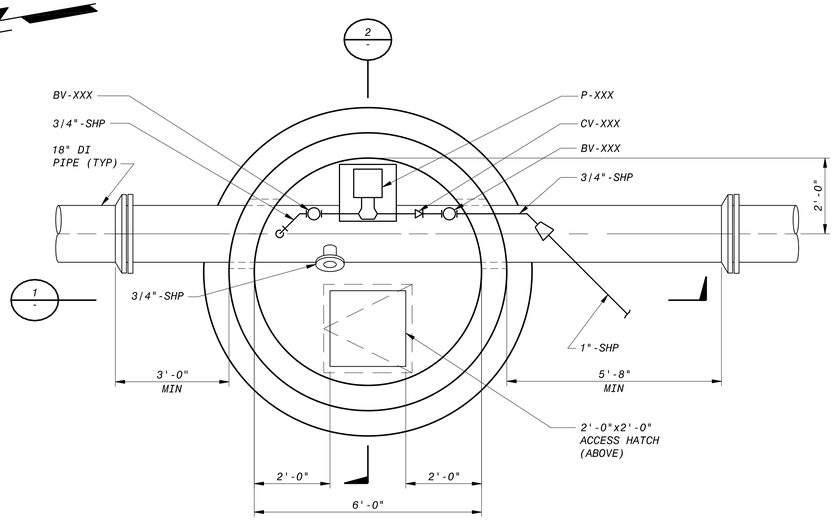

CHEMICAL INJECTION MANHOLE DETAIL

1/2" = 1'-0"

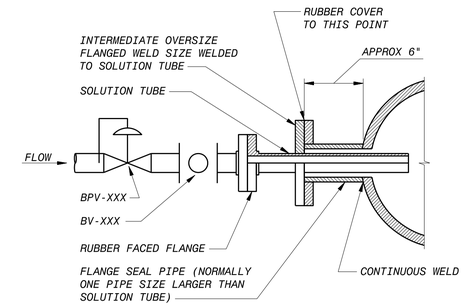

FLANGE ADAPTER DETAIL (A / -)

NO SCALE

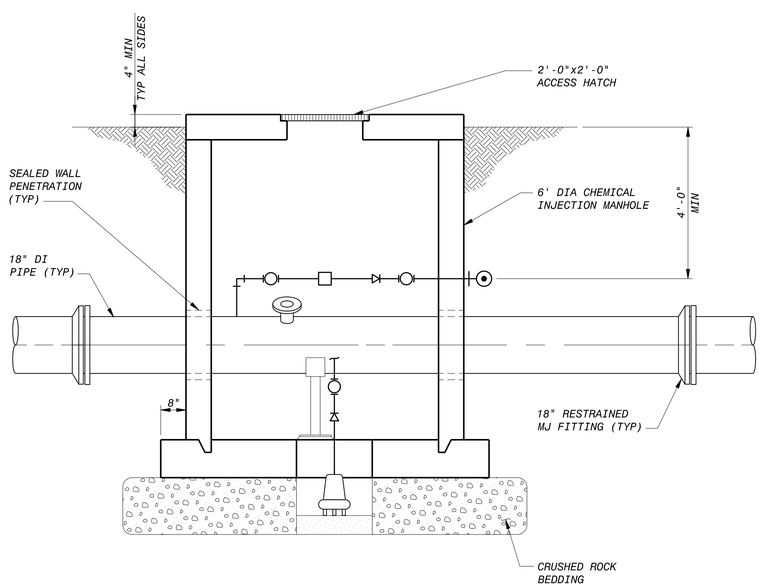

SECTION (1 / -)

1/2" = 1'-0"

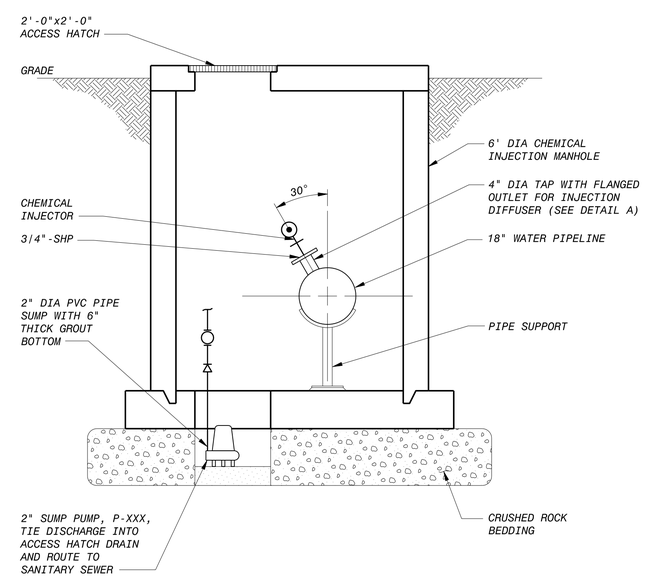

SECTION (2 / -)

1/2" = 1'-0"

NOTES:

1. PRECAST CHEMICAL INJECTION MANHOLE SHALL CONFORM TO ASTM C-478, AASHTO M-199, AND VDOT STANDARDS. FLAT TOP SECTION SHALL BE DESIGNED FOR AASHTO HS-20 WHEEL LOADING.

12" 6" 0 1' 2' 3' 4' 5'

1/2"=1'-0"

PRELIMINARY - NOT FOR CONSTRUCTION

NO.	BY	CK	APP
A			

DATE	REVISIONS AND RECORD OF ISSUE
02/20/15	GMP DRAWINGS

50-3070 - Mechanical Process Drawings

M-95-101.dwg

XREF1:
XREF2:
XREF3:
XREF4:

SAVED:KOE49353, 12/18/2014 3:01:42 PM
PLOTTED:
USER:KOE49353 DWG VER:1000

BLACK & VEATCH
Building a world of difference.
Black & Veatch Corporation
Virginia Beach, VA

BEDFORD REGIONAL WATER AUTHORITY
SMITH MOUNTAIN LAKE WTP &
RAW WATER PUMPING STATION / INTAKE

MECHANICAL
CHEMICAL VALVE VAULT
PLAN, SECTION AND DETAILS

DESIGNED:
DETAILED:
CHECKED:
APPROVED:
DATE:

0 1/2 1
IF THIS BAR DOES NOT MEASURE 1" THEN DRAWING IS NOT TO FULL SCALE

PROJECT NO.
182262

M-95-101
SHEET
OF

FD7000
D7000

ABBREVIATIONS

ACC	AIR COOLED CONDENSER
ACU	AIR CONDITIONING UNIT
AD	ACCESS DOOR
AFF	ABOVE FINISH FLOOR
AP	ACCESS PANEL
APD	AIR PRESSURE DROP
BHP	BRAKE HORSEPOWER
BOD	BOTTOM OF DUCT
CD	CONDENSATE DRAIN
CFM	CUBIC FEET PER MINUTE
CLG	CEILING
COND	CONDENSER
dB	DECIBEL
DN	DOWN
DX	DIRECT EXPANSION
EA	EXHAUST AIR
EAT	ENTERING AIR TEMPERATURE
EC	ELECTRICAL CONTRACTOR
EDB	ENTERING DRY BULB TEMPERATURE
ELEV	ELEVATION
ESP	EXTERNAL STATIC PRESSURE
EWB	ENTERING WET BULB TEMPERATURE
FD	FIRE DAMPER
FLA	FULL LOAD AMPS
FLR	FLOOR
FT	FOOT/FEET
FT HD	FEET OF HEAD
GA	GAUGE or GAGE
GAL	GALLONS
GPH	GALLONS PER HOUR
GPM	GALLONS PER MINUTE
HP	HORSEPOWER
HPU	HEAT PUMP UNIT
HZ	HERTZ
IN	INCHES
IN WG	INCHES WATER GAUGE
KW	KILOWATTS
LAT	LEAVING AIR TEMPERATURE
LAV	LAVATORY
LBS/HR	POUNDS PER HOUR
LDB	LEAVING DRY BULB TEMPERATURE
LF	LINEAR FEET or FOOT
LWB	LEAVING WET BULB TEMPERATURE
LWT	LEAVING WATER TEMPERATURE
MAX	MAXIMUM
MBH	BTU PER HOUR (THOUSAND)
MCA	MINIMUM CIRCUIT AMPS
MIN	MINIMUM
MIN SP	MINIMUM STATIC PRESSURE
MOCP	MAXIMUM OVERCURRENT PROTECTION
MV	MANUAL VENT
N/A	NOT APPLICABLE
NC	NOISE CRITERIA
N C	NORMALLY CLOSED
NIC	NOT IN CONTRACT
N O	NORMALLY OPEN
NTS	NOT TO SCALE
OA	OUTSIDE AIR
PD	PRESSURE DROP
PH	PHASE
PSI	POUNDS PER SQUARE INCH
PSIG	POUND-FORCE PER SQUARE INCH GAUGE
RA	RETURN AIR
RH	RELATIVE HUMIDITY
RPM	REVOLUTIONS PER MINUTE
SA	SUPPLY AIR
SP	STATIC PRESSURE
SQ FT	SQUARE FEET
TD or ΔT	TEMPERATURE DIFFERENCE
TSP	TOTAL STATIC PRESSURE
TYP	TYPICAL
UNO	UNLESS NOTED OTHERWISE
VOLT	VOLTAGE
W	WATT
WBT	WET BULB TEMPERATURE
°F	DEGREES FAHRENHEIT
&	AND
#	NUMBER

DUCTWORK SYMBOLS

24x12	DUCT SIZE, (WxH)
24x12	INDICATES DUCT LINER USED; INTERIOR DIMENSIONS
	SUPPLY DUCT UP
	RETURN/EXHAUST DUCT UP
	SUPPLY DUCT DOWN
	RETURN/EXHAUST DUCT DOWN
R R	INCLINED RISE IN DIRECTION OF AIRFLOW
D D	INCLINED DROP IN DIRECTION OF AIRFLOW
10/6 10x6	SUPPLY DUCT SECTION, FIRST FIGURE IS TOP
10/6 10x6	RETURN/EXHAUST DUCT SECTION, FIRST FIGURE IS TOP
	FLEXIBLE DUCT CONNECTION
VD VD	VOLUME CONTROL DAMPER (VD)
	FLEXIBLE DUCT, MAXIMUM LENGTH 4'
	SUPPLY AIR SIDEWALL REGISTER/GRILLE
	RETURN/EXHAUST AIR SIDEWALL REGISTER/GRILLE
FD	FIRE DAMPER IN HORIZONTAL DUCT
FD	FIRE DAMPER IN VERTICAL DUCT
SD SD	SMOKE DAMPER
M M	MOTOR OPERATED DAMPER
AD AD	ACCESS DOOR IN DUCT
AD	ACCESS DOOR IN DUCT
	SUPPLY AIR CEILING DIFFUSER OR REGISTER
	EXHAUST/RETURN AIR CEILING GRILLE OR REGISTER
	LINEAR SLOT DIFFUSER
	ROOF MOUNTED EXHAUST FAN
	PUMP
SD-X / XXX	GRILLES, REGISTERS AND DIFFUSERS NOTATION
SD-X / XXX	VAV BOX NOTATION
	RECTANGLE TO ROUND DUCT TRANSITION
	CONNECT NEW TO EXISTING
	POINT OF DISCONNECTION
	AIR FLOW

DUCTWORK LINE WEIGHTS

PROPOSED	PROPOSED DUCTWORK (SIZE AS INDICATED)

PIPING AND VALVE SYMBOLS

2" COND	CONDENSATE (SIZE AS INDICATED)
2" NG	NATURAL GAS (SIZE AS INDICATED)
2" REF	REFRIGERANT (SIZE AS INDICATED)
	BALL VALVE
	GATE VALVE
	BUTTERFLY VALVE
	2 WAY CONTROL VALVE
	3 WAY CONTROL VALVE
	PRESSURE RELIEF VALVE
	PRESSURE REDUCING VALVE
	SOLENOID VALVE
	GAS COCK
	PIPE TURNING UP
	PIPE TURNING DOWN
	PIPE BRANCH UP
	PIPE BRANCH DOWN
	PIPE CAP
	PIPE PLUG
	PIPE BREAK
	UNION
	FLOW ARROW
	THERMOMETER
	PRESSURE GAUGE
	SINGLE FLANGE
	DOUBLE FLANGE
	BLIND FLANGE
	DOUBLE BLIND FLANGE
	FLANGED VALVE WITH BLIND FLANGE
	CONCENTRIC REDUCER
	ECCENTRIC REDUCER

CONTROL SYMBOLS

S	DUCT SMOKE DETECTOR, FURNISHED BY EC, INSTALLED BY HC.
SS	START/STOP
M	DAMPER MOTOR
CS	CURRENT SENSOR
ES	END SWITCH
AO	ANALOG OUTPUT
AI	ANALOG INPUT
BO	BINARY OUTPUT
BI	BINARY INPUT
DPS	PIPE DIFFERENTIAL PRESSURE SENSOR
H	HUMIDITY SENSOR
SP	STATIC PRESSURE SENSOR
VSD	VARIABLE SPEED DRIVE
T 24	THERMOSTAT - LOW VOLTAGE (24 VOLT - MOUNT AT 48" AFF)
T 120	THERMOSTAT - LINE VOLTAGE (120 VOLT - MOUNT AT 48" AFF)
OS	OCCUPANCY SENSOR - CEILING MOUNTED
TE	TEMPERATURE ELEMENT
UCP	UNIT CONTROL PANEL
CO2	CO2 SENSOR
AL	ALARM

DUCTWORK FITTING STANDARDS

THE FOLLOWING INDICATE THE STANDARD FOR DUCTWORK FITTINGS REQUIRED FOR THIS PROJECT.

ACCEPTABLE	NOT ACCEPTABLE
ROUND, FLAT OVAL OR RECTANGULAR — SMOOTH RADIUS ELBOWS W/ R/D>1.5	ROUND, FLAT OVAL OR RECTANGULAR — MITERED ELBOWS (SUPPLY)
ROUND, FLAT OVAL OR RECTANGULAR — SMOOTH RADIUS ELBOWS W/ R/D>.75 WITH FULL RADIUS SPLITTER VANE	ROUND, FLAT OVAL OR RECTANGULAR — MITERED ELBOWS W/ VANES
RECTANGULAR THROAT W/ RADIUS HEEL	ROUND, FLAT OVAL OR RECTANGULAR — WYE W/ TURNING VANES W/ OR W/OUT DIVIDER
MITERED ELBOWS (TRANSFER DUCT ONLY)	ROUND, FLAT OVAL OR RECTANGULAR — SMOOTH RADIUS ELBOWS W/ R/D<1.5
ROUND, FLAT OVAL OR RECTANGULAR — OFFSET W/ ANGLE <30°	ROUND, FLAT OVAL OR RECTANGULAR — ELBOWS Z-SHAPED (SUPPLY ONLY)
ROUND, FLAT OVAL OR RECTANGULAR — SMOOTH RADIUS WYE W/ R/D>1.5	RECTANGULAR — WYE W/ OR W/OUT DIVIDER
ROUND, FLAT OVAL OR RECTANGULAR — WYE W/ ANGLE <90°	ROUND, FLAT OVAL OR RECTANGULAR — BELLMOUTH FITTINGS
<30° ROUND, FLAT OVAL OR RECTANGULAR — TRANSITION WYE ANGLE <30°	ROUND OR RECTANGULAR — SPIN-IN FITTINGS
45° ROUND, FLAT OVAL OR RECTANGULAR — TEE W/ 45° ENTRY BRANCH TO MAIN	ROUND OR RECTANGULAR — STRAIGHT TEES
ROUND OR RECTANGULAR — CONICAL TEES	<45° ROUND, FLAT OVAL OR RECTANGULAR <45° — DOUBLE TEE WITH BRANCH ANGLE <45°
ROUND, FLAT OVAL OR RECTANGULAR <45° — TEE WITH BRANCH ANGLE <45°	
45° ROUND, FLAT OVAL OR RECTANGULAR — DOUBLE TEE W/ 45° ENTRY BRANCH TO MAIN	

PRELIMINARY - NOT FOR CONSTRUCTION

Drawing Copyright © 2014

CHA
1901 Innovation Drive, Suite 2100
Blacksburg, VA 24060
Main: (518) 453-4500 www.chacompanies.com

DATE	REVISIONS AND RECORD OF ISSUE	NO	BY	CHK	APP
02/27/15	LEVEL 2 DESIGN DOCUMENTS	A			

PW: ...\Y:\PJ\RCS\BWA\27872\CAD\Dwg\M\27872-H2-001 SV-2 CHA FINAL LEVEL 2 REV1.dwg
SW: ...MODELS\27872-MECH13-Central (AHU).rvt
SAVED: 2/27/2015 5:04:43 PM
PLOTTED:
USER:
DWG VER: A
XREF1:
XREF2:
XREF3:
XREF4:

BLACK & VEATCH
Building a world of difference.
Black & Veatch Corporation
Kansas City, Missouri

BEDFORD REGIONAL WATER AUTHORITY
SMITH MOUNTAIN LAKE WTP & LAKES TO FOREST WATER LINE EXTENSION

HVAC LEGEND, ABBREVIATIONS AND SYMBOLS

DESIGNED: NS
DETAILED: MZ, PDL
CHECKED: TSW
APPROVED: Approver
DATE: 12/15/2014

0 1/2 1
IF THIS BAR DOES NOT MEASURE 1" THEN DRAWING IS NOT TO FULL SCALE

CHA PROJECT NO. 27872

H-00-001
SHEET
OF

D7890

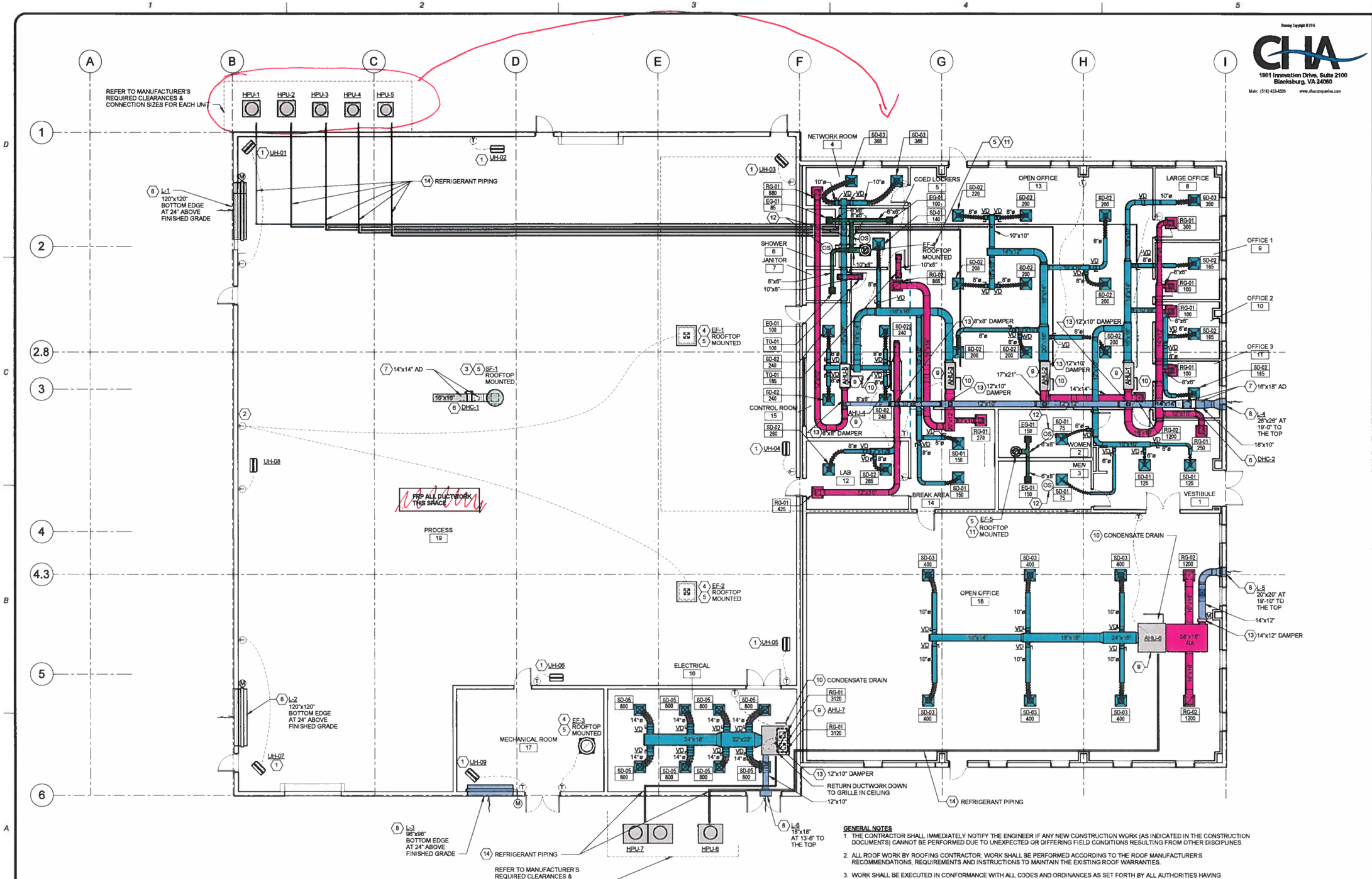

1 FIRST FLOOR DUCTWORK PLAN - BASE BID
1/8" = 1'-0"

GENERAL NOTES

1. THE CONTRACTOR SHALL IMMEDIATELY NOTIFY THE ENGINEER IF ANY NEW CONSTRUCTION WORK (AS INDICATED IN THE CONSTRUCTION DOCUMENTS) CANNOT BE PERFORMED DUE TO UNEXPECTED OR DIFFERING FIELD CONDITIONS RESULTING FROM OTHER DISCIPLINES.
2. ALL ROOF WORK BY ROOFING CONTRACTOR; WORK SHALL BE PERFORMED ACCORDING TO THE ROOF MANUFACTURER'S RECOMMENDATIONS, REQUIREMENTS AND INSTRUCTIONS TO MAINTAIN THE EXISTING ROOF WARRANTIES.
3. WORK SHALL BE EXECUTED IN CONFORMANCE WITH ALL CODES AND ORDINANCES AS SET FORTH BY ALL AUTHORITIES HAVING JURISDICTION [AHJ].
4. CONTRACTOR SHALL PROVIDE ALL NECESSARY MEASURES FOR WORK BEING PERFORMED.
5. THE SCOPE AND BOUNDARY OF WORK WITHIN THE WATER TREATMENT PLANT DOES NOT CONTAIN HAZARDOUS MATERIALS.
6. REFER TO SHEET H-30-103 FOR CODED NOTES.

PRELIMINARY - NOT FOR CONSTRUCTION

Drawing Copyright © 2014

CHA
1901 Innovation Drive, Suite 2100
Blacksburg, VA 24060
Main: (518) 453-4500 www.chacompanies.com

NO.	BY	CHK	APP	DATE	REVISIONS AND RECORD OF ISSUE
A				02/27/15	LEVEL 2 DESIGN DOCUMENTS

PW: K:\PROJECTS\FAYETTEVILLE\BEDFORD\2015-02-27 - DWR FIRST LEVEL 2 REVIT
SW: MODEL\L1\27872-MEP413-Central_(HVAC).rvt
SAVED: 2/27/2015 5:04:58 PM
PLOTTED:
USER:
XREF1:
XREF2:
XREF3:
XREF4:
DWG VER: A

BLACK & VEATCH
Building a world of difference.
Black & Veatch Corporation
Kansas City, Missouri

BEDFORD REGIONAL WATER AUTHORITY
SMITH MOUNTAIN LAKE WTP & LAKES TO FOREST WATER LINE EXTENSION

HVAC - FIRST FLOOR DUCTWORK PLAN - BASE BID

DESIGNED: NS
DETAILED: MZ, PDL
CHECKED: TSW
APPROVED: Approver
DATE: 12/15/2014

0 1/2 1
IF THIS BAR DOES NOT MEASURE 1" THEN DRAWING IS NOT TO FULL SCALE

CHA PROJECT NO. 27872

H-30-101
SHEET
OF

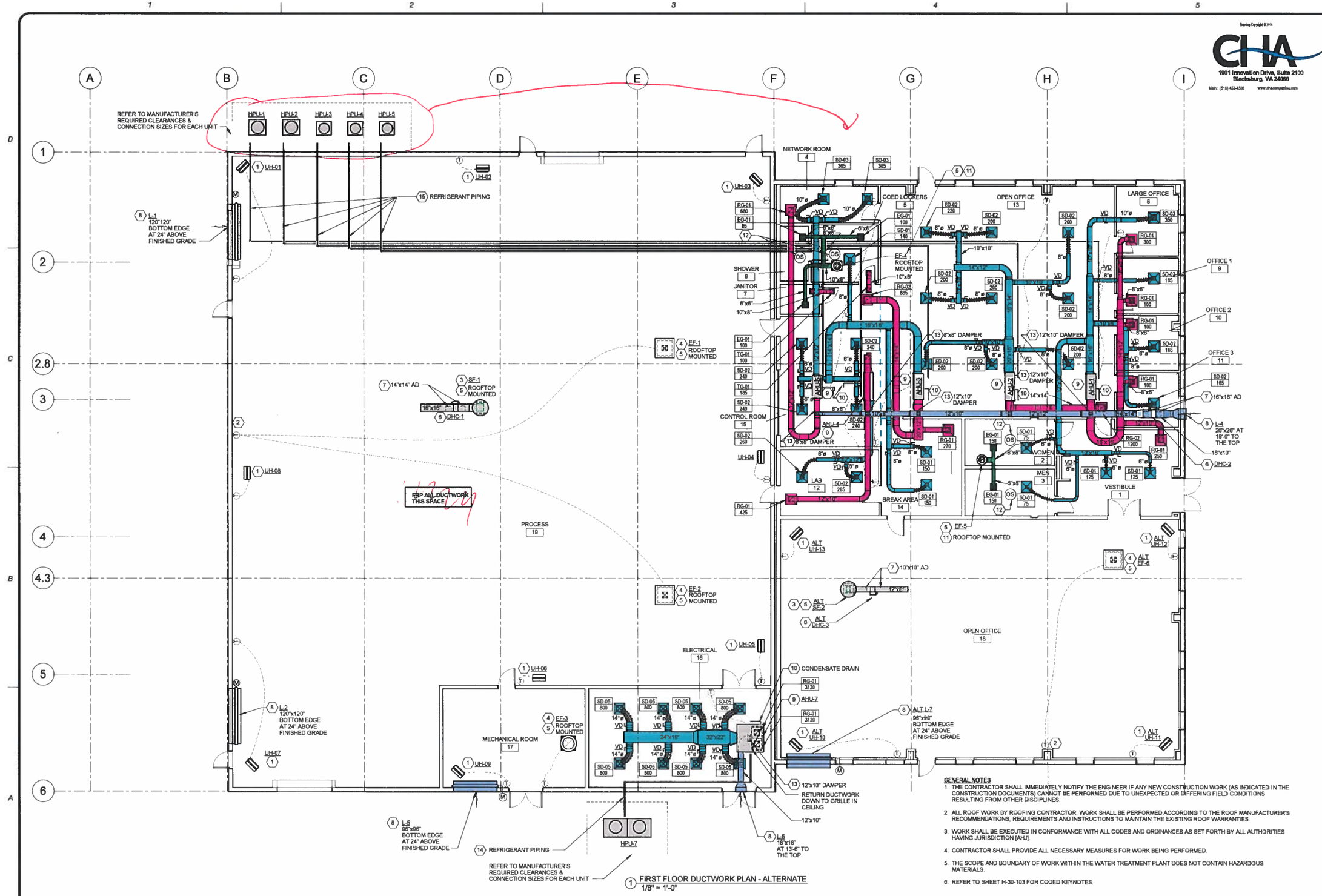

1 FIRST FLOOR DUCTWORK PLAN - ALTERNATE
1/8" = 1'-0"

GENERAL NOTES

1. THE CONTRACTOR SHALL IMMEDIATELY NOTIFY THE ENGINEER IF ANY NEW CONSTRUCTION WORK (AS INDICATED IN THE CONSTRUCTION DOCUMENTS) CANNOT BE PERFORMED DUE TO UNEXPECTED OR DIFFERING FIELD CONDITIONS RESULTING FROM OTHER DISCIPLINES.
2. ALL ROOF WORK BY ROOFING CONTRACTOR; WORK SHALL BE PERFORMED ACCORDING TO THE ROOF MANUFACTURER'S RECOMMENDATIONS, REQUIREMENTS AND INSTRUCTIONS TO MAINTAIN THE EXISTING ROOF WARRANTIES.
3. WORK SHALL BE EXECUTED IN CONFORMANCE WITH ALL CODES AND ORDINANCES AS SET FORTH BY ALL AUTHORITIES HAVING JURISDICTION [AHJ].
4. CONTRACTOR SHALL PROVIDE ALL NECESSARY MEASURES FOR WORK BEING PERFORMED.
5. THE SCOPE AND BOUNDARY OF WORK WITHIN THE WATER TREATMENT PLANT DOES NOT CONTAIN HAZARDOUS MATERIALS.
6. REFER TO SHEET H-30-103 FOR CODED KEYNOTES.

PRELIMINARY - NOT FOR CONSTRUCTION

Drawing Copyright © 2014

CHA
1901 Innovation Drive, Suite 2100
Blacksburg, VA 24060
Main: (540) 453-4300 www.chacompanies.com

NO.	BY	CHK	APP
A			

02/27/15 LEVEL 2 DESIGN DOCUMENTS

DATE REVISIONS AND RECORD OF ISSUE

PW: X:\Projects\Water\27872\Documents\Drawings\02-27 - DR FTPWC - LEVEL 2 REV1.dwg
SN: WORKSHARE2-WEST-Central (BRA)..dwg
SAVED: 2/27/2015 5:05:12 PM XREF1:
PLOTTED: XREF2:
USER: XREF3:
DWG VER: A XREF4:

BLACK & VEATCH
Building a world of difference.
Black & Veatch Corporation
Kansas City, Missouri

BEDFORD REGIONAL WATER AUTHORITY
SMITH MOUNTAIN LAKE WTP & LAKES TO FOREST WATER LINE EXTENSION
HVAC - FIRST FLOOR DUCTWORK PLAN - ALTERNATE

DESIGNED: NS
DETAILED: MZ, PDL
CHECKED: TSW
APPROVED: Approver
DATE: 12/15/2014

0 1/2 1
IF THIS BAR DOES NOT MEASURE 1" THEN DRAWING IS NOT TO FULL SCALE

CHA PROJECT NO. 27872

H-30-102 A
SHEET
OF

Drawing Copyright © 2014

CHA
1901 Innovation Drive, Suite 2100
Blacksburg, VA 24060
Main: (518) 453-4500 www.chacompanies.com

H-30-101 & H-30-102 CODED NOTES

1. ELECTRIC UNIT HEATER MOUNTED FROM CEILING WITH MANUFACTURER'S WALL-MOUNTED THERMOSTAT. PROVIDE INTEGRAL ON/OFF/FAN SWITCH, AND MANUFACTURER'S BRACKETS AND HARDWARE FOR CEILING MOUNTING. FIELD LOCATE AS NECESSARY MAINTAINING ACCESS CLEARANCES ON ALL SIDES AND COORDINATE WITH PROCESS PIPING. LOCATE WALL-MOUNTED THERMOSTAT AT 52" TO 54" ABOVE FINISHED FLOOR. PROVIDE THERMOSTAT WITH MANUFACTURER'S THERMAL BREAK ACCESSORY.

2. PROVIDE WALL MOUNTED THERMOSTAT FOR FAN START/STOP CONTROL. COORDINATE THERMOSTAT VOLTAGE WITH FAN POWER VOLTAGE. PROVIDE CONTROLS TRANSFORMER AS NECESSARY TO COORDINATE DAMPER MOTOR VOLTAGE WITH FAN MOTOR VOLTAGE. INTENT IS FOR FANS TO BE MANUALLY STARTED DURING COOLING SEASON, AND MANUALLY TURNED OFF DURING HEATING SEASON. PROVIDE THERMOSTAT WITH MANUFACTURER'S THERMAL BREAK ACCESSORY.

3. ROOFTOP, CURB-MOUNTED DOME MINIMUM VENTILATION SUPPLY FAN SF-1 ON FACILITY ROOFTOP WITH 18.5"x18.5" ROOF OPENING. PROVIDE WITH FACTORY MOUNTED INTEGRAL MOTORIZED ISOLATION DAMPER AND FACTORY MOUNTED AND WIRED NEMA-4X INTEGRAL DISCONNECT SWITCH. PROVIDE CORROSION RESISTANT COATING AND ALUMINUM CONSTRUCTION FOR FAN HOUSING, WHEEL AND ISOLATION DAMPER. PROVIDE STAINLESS STEEL MESH INSECT SCREEN. SF-1 FAN SHALL BE HARDWIRE INTERLOCKED WITH EXHAUST FANS EF-1 AND EF-2 WHENEVER THOSE EXHAUST FANS ARE STOPPED OR STOPPED. INTENT IS FOR SF-1 TO PROVIDE MINIMUM REQUIRED VENTILATION.

4. ROOFTOP, CURB-MOUNTED CENTRIFUGAL HOODED EXHAUST FAN ON FACILITY ROOFTOP WITH 56.5"x56.5" ROOF OPENING. PROVIDE WITH FACTORY MOUNTED INTEGRAL MOTORIZED ISOLATION DAMPER AND FACTORY MOUNTED AND WIRED NEMA-4 INTEGRAL DISCONNECT SWITCH. PROVIDE CORROSION RESISTANT COATING AND ALUMINUM CONSTRUCTION FOR FAN HOUSING, WHEEL AND ISOLATION DAMPER. PROVIDE STAINLESS STEEL MESH INSECT SCREEN.

5. PROVIDE FAN MANUFACTURER'S FACTORY FABRICATED ROOF CURB, MINIMUM 24" TALL. COORDINATE FRAMING AND STEEL REQUIREMENTS WITH STRUCTURAL AND PRE-ENGINEERED METAL BUILDING FABRICATION.

6. DUCT MOUNTED ELECTRIC HEATING COIL; MAINTAIN ALL REQUIRED ACCESS AND ELECTRICAL CLEARANCES ON ALL SIDES. COIL SIZED FOR FREEZE PROTECTION AT 55°F SETPOINT. PROVIDE DUCT MOUNTED THERMOSTAT MADE BY DUCT HEATING COIL MANUFACTURER; THERMOSTAT SHALL BE LINE VOLTAGE, OR PROVIDE CONTROL TRANSFORMER AS NECESSARY.

7. PROVIDE ACCESS DOORS ON BOTH SIDES OF INLINE AND DUCT MOUNTED ELECTRIC HEATING COIL.

8. PROVIDE OUTSIDE AIR INTAKE COMBINATION LOUVER/DAMPER WITH MOTORIZED ACTUATOR. COORDINATE WALL OPENING WITH FINAL LOUVER SELECTION, AND WITH BUILDING STRUCTURAL MEMBERS AND ELEMENTS. FOR LOUVERS THAT ARE DUCTED, COORDINATE FINAL ELEVATION WITH DUCT SYSTEMS ON INSIDE OF BUILDING. PROVIDE SHEET METAL PLENUM THRU WALL OPENING; SLOPE BOTTOM TO EXTERIOR FOR DRAINAGE. PROVIDE CORROSION RESISTANT COATING AND ALUMINUM CONSTRUCTION FOR FRAME AND DAMPER BLADES. PROVIDE STAINLESS STEEL MESH INSECT SCREEN FOR L-1 AND L-2. PROVIDE ALUMINUM MESH INSECT SCREEN FOR L-3, L-4, L-5, L-6, AND ALT L-7.

9. SUSPEND AIR HANDLING UNIT FROM BUILDING STRUCTURE; MAINTAIN ALL REQUIRED ACCESS CLEARANCES (i.e. - ELECTRICAL, FILTER PULL, ETC.) ABOVE, BELOW, AND AROUND UNIT.

10. ROUTE AND SLOPE CONDENSATE DRAIN LINE TO NEAREST FLOOR DRAIN OR TRENCH DRAIN. REFER TO PLUMBING PLAN DRAWINGS FOR DRAIN LOCATIONS.

11. ROOFTOP, CURB-MOUNTED CENTRIFUGAL DOWNBLAST EXHAUST FAN ON FACILITY ROOFTOP WITH 14.5"x14.5" ROOF OPENING FOR EF-4, AND 12.5"x12.5" ROOF OPENING FOR EF-5. PROVIDE WITH FACTORY MOUNTED INTEGRAL MOTORIZED ISOLATION DAMPER AND FACTORY MOUNTED AND WIRED NEMA-4X INTEGRAL DISCONNECT SWITCH. PROVIDE CORROSION RESISTANT COATING AND ALUMINUM CONSTRUCTION FOR FAN HOUSING, WHEEL AND ISOLATION DAMPER. PROVIDE ALUMINUM MESH INSECT SCREEN. CONNECT EXHAUST AIR DUCT TO EXHAUST FAN AT UNDERSIDE OF ROOFTOP WITH FLEX; PROVIDE 18"x18" ACCESS DOOR IN DUCTWORK.

12. PROVIDE OCCUPANCY SENSOR IN TOILETS CEILINGS TO START EXHAUST FAN WHENEVER THEY ARE OCCUPIED; PROVIDE TIME DELAY RELAY TO ALLOW EXHAUST FAN TO CONTINUE TO OPERATE AFTER THERE IS NO OCCUPANCY TO PURGE SPACES.

13. PROVIDE MOTORIZED DAMPER IN OUTSIDE AIR DUCT DOWN AND CONNECT TO AIR HANDLER RETURN DUCT.

14. ROUTE SPLIT SYSTEM REFRIGERANT LINES TO HEAT PUMP UNITS OUTSIDE ON GRADE. REFRIGERANT LINES SHALL BE SIZED PER MANUFACTURER'S INSTRUCTIONS AND RECOMMENDATIONS. PROVIDE OUTDOOR CONCRETE HOUSEKEEPING PAD UNDERNEATH CONDENSING UNIT; REFER TO DETAIL.

PRELIMINARY - NOT FOR CONSTRUCTION

DATE	REVISIONS AND RECORD OF ISSUE	NO	BY	CHK	APP
02/27/15	LEVEL 2 DESIGN DOCUMENTS	A			

PW: V:\Projects\BWA\27872\CAD\Drawings\27-2-CHA FINAL LEVEL 2 REV1.rvt
SW: MODELS\27872-MECH13-Central (AHU).rvt
SAVED: 2/27/2015 5:05:12 PM
PLOTTED:
USER:
XREF1:
XREF2:
XREF3:
XREF4:
DWG VER: A

BLACK & VEATCH
Building a world of difference.
Black & Veatch Corporation
Kansas City, Missouri

BEDFORD REGIONAL WATER AUTHORITY
SMITH MOUNTAIN LAKE WTP & LAKES TO FOREST WATER LINE EXTENSION

HVAC - CODED NOTES

DESIGNED: NS
DETAILED: MZ
CHECKED: TSW
APPROVED: Approver
DATE: 12/15/2014

0 1/2 1
IF THIS BAR DOES NOT MEASURE 1" THEN DRAWING IS NOT TO FULL SCALE

CHA PROJECT NO. 27872

H-30-103
SHEET
OF

D7600

Drawing Copyright © 2014

CHA
1901 Innovation Drive, Suite 2100
Blacksburg, VA 24060
Main: (518) 453-4500 www.chacompanies.com

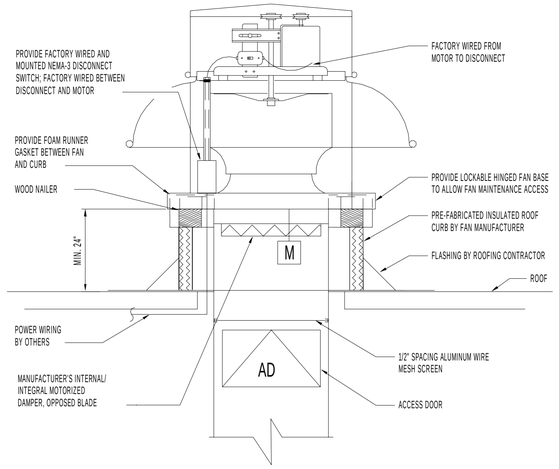

1 CENTRIFUGAL DOWNBLAST EXHAUST FAN DETAIL (EF-4, 5)
NOT TO SCALE

NOTE:

1. ROOF FLASHING SHALL BE BY ROOFING CONTRACTOR; COORDINATE FAN INSTALLATION TO MAINTAIN ALL ROOFING ASSEMBLY REQUIREMENTS AND WARRANTIES.

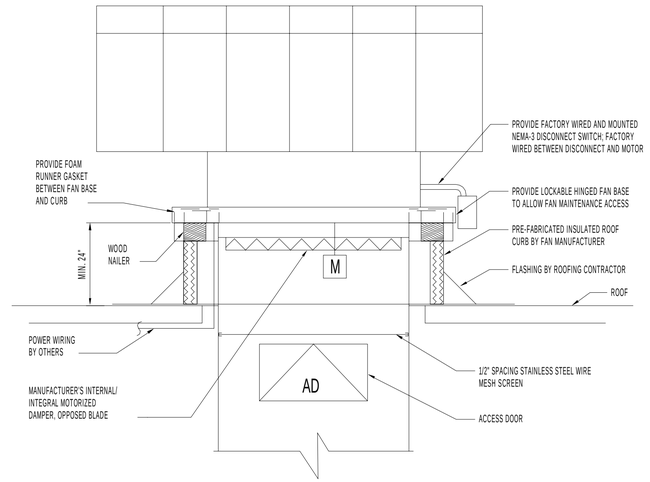

2 CENTRIFUGAL HOOD EXHAUST FAN DETAIL (EF-1, 2, ALT EF-6)
NOT TO SCALE

NOTE:

1. ROOF FLASHING SHALL BE BY ROOFING CONTRACTOR; COORDINATE FAN INSTALLATION TO MAINTAIN ALL ROOFING ASSEMBLY REQUIREMENTS AND WARRANTIES.

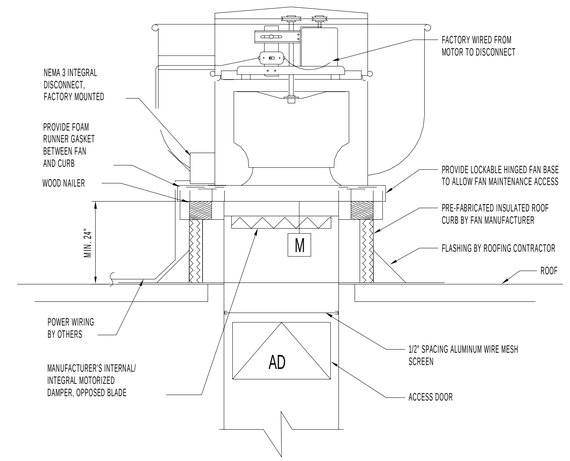

3 CENTRIFUGAL UPBLAST EXHAUST FAN DETAIL (EF-3)
NOT TO SCALE

NOTE:

1. FAN AND ALL RELATED ACCESSORIES SHALL BE RATED FOR USE IN A CORROSIVE ENVIRONMENT, INCLUDING BUT NOT LIMITED TO EPOXY COATED FAN HOUSING, TEFC MOTOR, STAINLESS STEEL FAN SHAFT, STAINLESS STEEL HARDWARE, NEMA 3 DISCONNECT AND EPOXY COATED CURB.
2. ROOF FLASHING SHALL BE BY ROOFING CONTRACTOR; COORDINATE FAN INSTALLATION TO MAINTAIN ALL ROOFING ASSEMBLY REQUIREMENTS AND WARRANTIES.

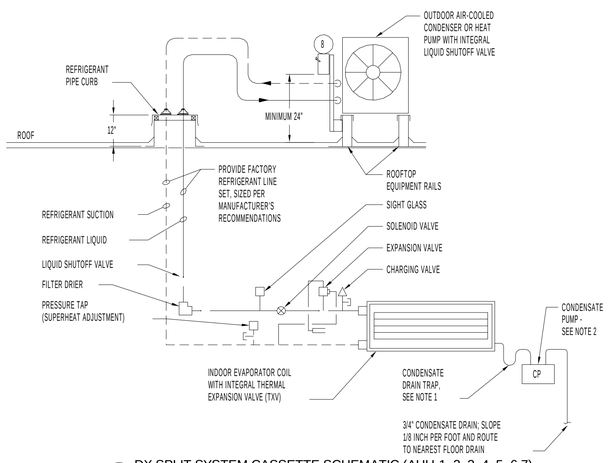

4 DX SPLIT SYSTEM CASSETTE SCHEMATIC (AHU-1, 2, 3, 4, 5, 6,7)
NOT TO SCALE

NOTES :

1. PROVIDE CONDENSATE DRAIN WITH TRAP HEIGHT PER MANUFACTURER'S INSTALLATION SPECIFICATIONS AND REQUIREMENTS.
2. LITTLE GIANT CONDENSATE PUMP MODEL VCMA-20UL, CAPABLE OF 48 GPH AT 10 FT WC; PROVIDE POWER CONNECTION FOR 1/30 HP AT 120V/1/60HZ.

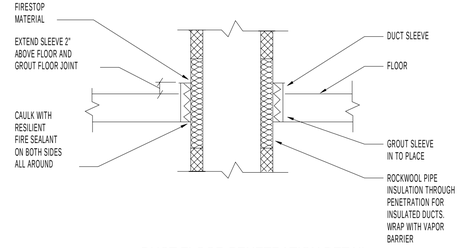

5 DUCT FLOOR PENETRATION DETAIL
NOT TO SCALE

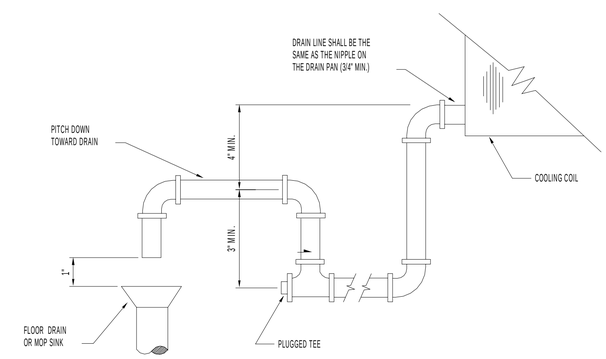

6 COOLING COIL CONDENSATE TRAP DETAIL
NOT TO SCALE

PRELIMINARY - NOT FOR CONSTRUCTION

02/27/15	LEVEL 2 DESIGN DOCUMENTS	A	
DATE	REVISIONS AND RECORD OF ISSUE	NO	BY CHK APP

PW: V:\Projects\BWA\27872\CAD\Discipline\27-2_CHA FINAL LEVEL 2 REV1.rvt
SW: XREF1:
SAVED: 2/27/2015 5:05:13 PM XREF2:
PLOTTED: XREF3:
USER: DWG VER: A XREF4:

BLACK & VEATCH
Building a world of difference.
Black & Veatch Corporation
Kansas City, Missouri

BEDFORD REGIONAL WATER AUTHORITY
SMITH MOUNTAIN LAKE WTP & LAKES TO FOREST WATER LINE EXTENSION

HVAC - DETAILS

DESIGNED: NS
DETAILED: MZ, PDL
CHECKED: TSW
APPROVED: Approver
DATE: 12/15/2014

0 1/2 1
IF THIS BAR DOES NOT MEASURE 1" THEN DRAWING IS NOT TO FULL SCALE

CHA PROJECT NO. 27872

H-30-501
SHEET
OF

D7600

Drawing Copyright © 2014

CHA
1901 Innovation Drive, Suite 2100
Blacksburg, VA 24060
Main: (518) 453-4500 www.chacompanies.com

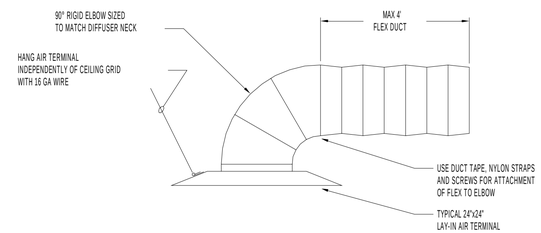

1 SUPPLY DIFFUSER DETAIL
NOT TO SCALE

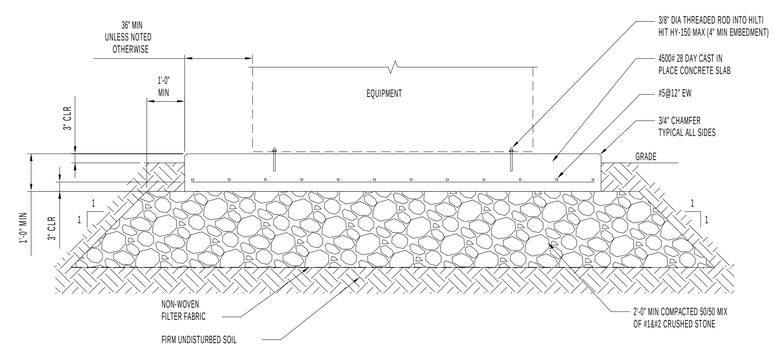

2 TYPICAL EXTERIOR HVAC EQUIPMENT SLAB DETAIL
NOT TO SCALE

PRELIMINARY - NOT FOR CONSTRUCTION

NO.	BY	CHK	APP
A			

02/27/15 LEVEL 2 DESIGN DOCUMENTS
DATE REVISIONS AND RECORD OF ISSUE

PW: V:\PROJECTS\BVA\27872\CADD\CONTRACTS\2015-02-27 - CHA FINAL LEVEL 2 REV1
SW: MODELS\27872-MECH13-Central (RVA).rvt
SAVED: 2/27/2015 5:05:13 PM
PLOTTED:
USER:
XREF1:
XREF2:
XREF3:
XREF4:
DWG VER: A

BLACK & VEATCH
Building a world of difference
Black & Veatch Corporation
Kansas City, Missouri

BEDFORD REGIONAL WATER AUTHORITY
SMITH MOUNTAIN LAKE WTP & LAKES TO
FOREST WATER LINE EXTENSION

HVAC - DETAILS

DESIGNED: NS
DETAILED: MZ, PDL
CHECKED: TSW
APPROVED: Approver
DATE: 12/15/2014

0 1/2 1
IF THIS BAR DOES NOT MEASURE 1" THEN DRAWING IS NOT TO FULL SCALE

CHA PROJECT NO.
27872

H-30-502
SHEET
OF

D7000

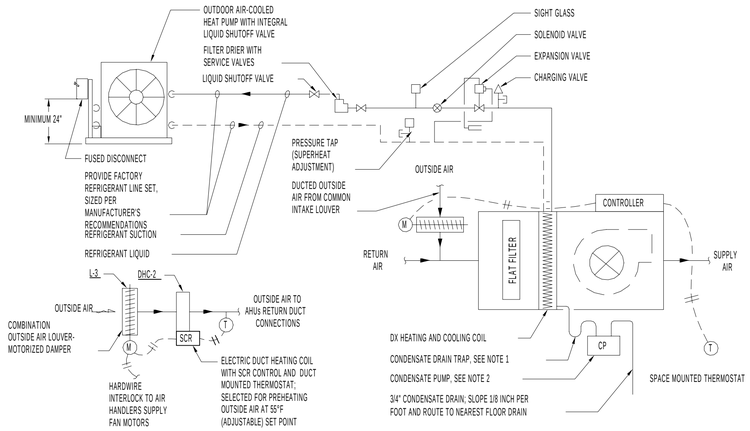

DUCTED SPLIT SYSTEM HEAT PUMP UNITS (AHU-1,2,3,4,5 / HPU-1,2,3,4,5 AND DHC-2 / L-3)

NOT TO SCALE

NOTES :

1. PROVIDE CHILLED WATER CONDENSATE DRAIN WITH TRAP HEIGHT PER MANUFACTURER'S INSTALLATION SPECIFICATIONS AND REQUIREMENTS.
2. PROVIDE MANUFACTURER'S INTEGRAL CONDENSATE PUMP, OR LITTLE GIANT CONDENSATE PUMP MODEL VCMA-20UL, CAPABLE OF 48 GPH AT 10 FT WC; PROVIDE POWER CONNECTION FOR 1/30 HP AT 120V/1/60HZ.

SEQUENCE OF OPERATION

SPLIT SYSTEM DX HEAT PUMP UNITS (AHU-1,2,3,4,5 / HPU-1,2,3,4,5)

1. DUCTED INDOOR AIR HANDLING UNIT SHALL MAINTAIN THE CONDITIONED SPACE TEMPERATURE AT 75°F (ADJUSTABLE) IN THE COOLING MODE AND 72°F (ADJUSTABLE) IN THE HEATING MODE. THE DIGITAL WALL MOUNTED PROGRAMMABLE THERMOSTAT FURNISHED WITH THE INDOOR UNIT SHALL CONTROL THE SPACE TEMPERATURE WHERE THE UNIT IS SERVING. REFER TO DRAWINGS FOR THERMOSTAT LOCATIONS
2. OUTDOOR AIR COOLED HEAT PUMP UNIT SHALL BE STARTED WHENEVER THERE IS A CALL FOR COOLING OR HEATING BY THE WALL MOUNTED PROGRAMMABLE THERMOSTAT.
4. THE UNIT SHALL STAGE COMPRESSORS AND CONTROL THE REFRIGERANT CYCLE WITH AN INTEGRAL RAWL DEVICE TO ENABLE LONGER UNIT RUNTIMES AND INHERENTLY MAINTAIN THE SPACE HUMIDITY.
5. AT A MINIMUM, PROGRAMMABLE THERMOSTAT SHALL B E CAPABLE OF SEVEN DAY SCHEDULE, OCCUPIED/UNOCCUPIED SET POINTS CONTROL AND AUTO CHANGEOVER BETWEEN COOLING AND HEATING.
6. DUCT MOUNTED OUTSIDE AIR MOTORIZED DAMPER SHALL BE HARDWIRE INTERLOCKED TO INDOOR AIR HANDLER FACTORY CONTROLLER (OR SUPPLY FAN MOTOR) TO OPEN WHENEVER THE INDOOR AIR HANDLER IS STARTED, AND CLOSE WHENEVER IT STOPS.
7. INTENT IS FOR EQUIPMENT TO OPERATE STAND ALONE.

ELECTRIC DUCT MOUNTED HEATING COIL (DHC-2/L-3)

1. THE ELECTRIC DUCT HEATING COIL SHALL BE ENERGIZED WHEN ITS DISCHARGE AIR TEMPERATURE (SIGNALED BY ITS DUCT MOUNTED THERMOSTAT) IS BELOW 55°F (MANUALLY ADJUSTABLE). THE DUCT HEATING COIL SHALL BE DE-ENERGIZED WHEN THE AIR TEMPERATURE IS ABOVE 57°F (MANUALLY ADJUSTABLE). ELECTRIC DUCT HEATING COIL SHALL HAVE MULTIPLE STAGES OF HEATING, INTEGRAL WITH MANUFACTURER'S FACTORY MOUNTED SCR CONTROLS AND SAFETIES.
4. OUTSIDE AIR MOTORIZED DAMPER SHALL BE HARDWIRE INTERLOCKED TO INDOOR AIR HANDLERS OR SUPPLY FAN MOTORS TO OPEN WHENEVER AN INDOOR AIR HANDLER IS STARTED, AND CLOSE WHENEVER THEY ARE ALL STOPPED.
5. INTENT IS FOR EQUIPMENT TO OPERATE STAND ALONE.

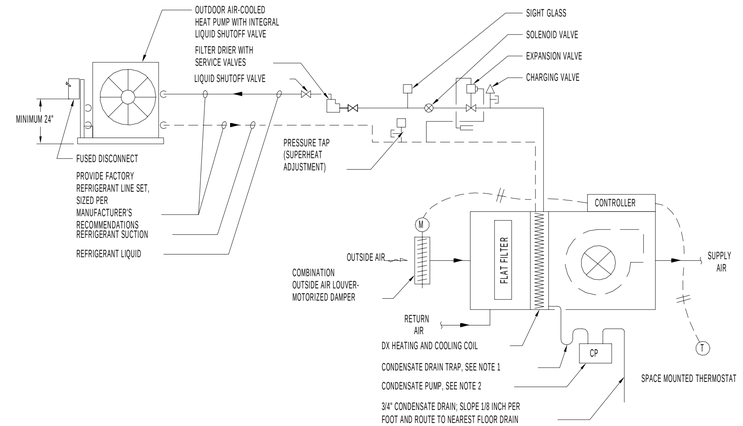

DUCTED SPLIT SYSTEM HEAT PUMP UNITS WITH DEDICATED OUTSIDE AIR LOUVER (AHU-6 / HPU-6 AND L-3)

NOT TO SCALE

NOTES :

1. PROVIDE CHILLED WATER CONDENSATE DRAIN WITH TRAP HEIGHT PER MANUFACTURER'S INSTALLATION SPECIFICATIONS AND REQUIREMENTS.
2. PROVIDE MANUFACTURER'S INTEGRAL CONDENSATE PUMP, OR LITTLE GIANT CONDENSATE PUMP MODEL VCMA-20UL, CAPABLE OF 48 GPH AT 10 FT WC; PROVIDE POWER CONNECTION FOR 1/30 HP AT 120V/1/60HZ.

SEQUENCE OF OPERATION

EXPANSION AREA SPLIT SYSTEM DX HEAT PUMP UNIT (AHU-6/HPU-6, L-3)

1. DUCTED INDOOR AIR HANDLING UNIT SHALL MAINTAIN THE CONDITIONED SPACE TEMPERATURE AT 75°F (ADJUSTABLE) IN THE COOLING MODE AND 72°F (ADJUSTABLE) IN THE HEATING MODE. THE DIGITAL WALL MOUNTED PROGRAMMABLE THERMOSTAT FURNISHED WITH THE INDOOR UNIT SHALL CONTROL THE SPACE TEMPERATURE WHERE THE UNIT IS SERVING. REFER TO DRAWINGS FOR THERMOSTAT LOCATIONS
2. OUTDOOR AIR COOLED HEAT PUMP UNIT SHALL BE STARTED WHENEVER THERE IS A CALL FOR COOLING OR HEATING BY THE WALL MOUNTED PROGRAMMABLE THERMOSTAT.
3. AT A MINIMUM, PROGRAMMABLE THERMOSTAT SHALL B E CAPABLE OF SEVEN DAY SCHEDULE, OCCUPIED/UNOCCUPIED SET POINTS CONTROL AND AUTO CHANGEOVER BETWEEN COOLING AND HEATING.
4. OUTSIDE AIR MOTORIZED DAMPER SHALL BE HARDWIRE INTERLOCKED TO INDOOR AIR HANDLER FACTORY CONTROLLER (OR SUPPLY FAN MOTOR) TO OPEN WHENEVER THE INDOOR AIR HANDLER IS STARTED, AND CLOSE WHENEVER IT STOPS.
5. INTENT IS FOR EQUIPMENT TO OPERATE STAND ALONE.

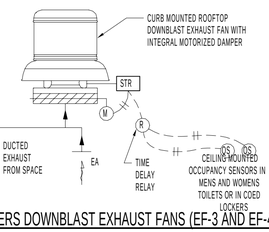

COED TOILETS AND LOCKERS DOWNBLAST EXHAUST FANS (EF-3 AND EF-4)

NOT TO SCALE

SEQUENCE OF OPERATION

COED LOCKERS EXHAUST FAN (EF-3) AND TOILETS EXHAUST FAN (EF-4)

1. THE COED LOCKERS EXHAUST FAN SHALL BE STARTED WHENEVER OCCUPANCY SENSORS IN THE LOCKERS DETECTS OCCUPANCY IN THE SPACE. PROVIDE TIME DELAY REALY(S) AS NEEDED TO ALLOW FAN TO CONTINUE OPERATING FOR A 10 MINUTE (ADJUSTABLE) TIME PERIOD AFTER THERE IS NO OCCUPANCY IN ORDER TO FLUSH THE SPACE. EXHAUST FAN INTEGRAL ISOLATION DAMPER SHALL BE HARDWIRE INTERLOCKED TO OPEN WHENEVER THE FAN IS STARTED, AND TO STOP WHENEVER THE FAN STOPS.
2. THE COED LOCKERS EXHAUST FAN SHALL BE STARTED WHENEVER OCCUPANCY SENSORS IN EACH TOILET CEILING DETECTS OCCUPANCY IN THE SPACE. PROVIDE TIME DELAY REALY(S) AS NEEDED TO ALLOW FAN TO CONTINUE OPERATING FOR A 10 MINUTE (ADJUSTABLE) TIME PERIOD AFTER THERE IS NO OCCUPANCY IN ORDER TO FLUSH THE SPACE. EXHAUST FAN INTEGRAL ISOLATION DAMPER SHALL BE HARDWIRE INTERLOCKED TO OPEN WHENEVER THE FAN IS STARTED, AND TO STOP WHENEVER THE FAN STOPS.
3. INTENT IS FOR EQUIPMENT TO OPERATE STAND ALONE.

SEQUENCES OF OPERATION, GENERAL

THE SEQUENCES OF OPERATION ARE PROVIDED TO ASSIST IN THE FAMILIARIZATION WITH THE CONTROL LOGIC PRESENTED ON THE SYSTEM SCHEMATICS. THE SEQUENCES ARE NOT INTENDED TO BE ALL INCLUSIVE.

IT IS UNDERSTOOD THAT UPON A CONTROL LOOP SETPOINT BEING SATISFIED, EQUIPMENT SHUTDOWN OR EQUIPMENT FAILURE, THE REVERSE SEQUENCE FROM WHAT IS DESCRIBED SHALL OCCUR TO SHUTDOWN SYSTEMS OR STOP EQUIPMENT IN A CONTROLLED MANNER.

SOME OF THE SIMPLER, REPETITIVE LOGIC NECESSARY HAS NOT BEEN INCLUDED IN THE SEQUENCES.

THE CONTROL SYSTEM SEQUENCE OF OPERATION SHALL BE DEVELOPED WITH THE INPUT, AND FINAL APPROVAL, OF THE OWNER.

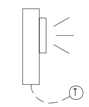

ELECTRIC PROPELLER UNIT HEATERS (UH-01 THRU UH-10)

NOT TO SCALE

NOTES :

1. PROVIDE MANUFACTURER'S THERMOSTAT THERMAL BREAK MOUNTING ACCESSORY.

SEQUENCE OF OPERATION

ELECTRIC PROPELLER UNIT HEATERS (UH-01 THRU 10)

1. ELECTRIC UNIT HEATERS (UH) SHALL PROVIDE AUXILIARY ELECTRIC FREEZE PROTECTION HEATING FOR THE PROCESS AREA, SELECTED AT A 55°F SPACE TEMPERATURE SETPOINT.
2. ELECTRIC UNIT HEATER SHALL START, WHEN THE SPACE TEMPERATURE (SIGNALED BY ITS WALL MOUNTED THERMOSTAT) IS BELOW 55°F (MANUALLY ADJUSTABLE). THE UNIT HEATER SHALL STOP WHEN THE TEMPERATURE OF THE SPACE IS ABOVE 57°F (MANUALLY ADJUSTABLE).
3. INTENT IS FOR EQUIPMENT TO OPERATE STAND ALONE.

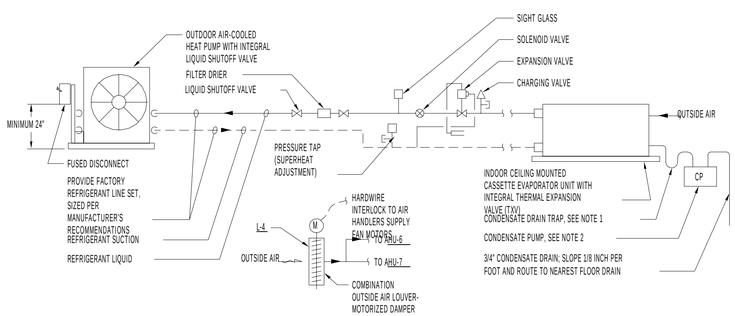

ELECTRICAL ROOM CEILING CASSETTE SPLIT SYSTEM HEAT PUMP UNITS (AHU-7,8 / HPU-7,8/L-4)

NOT TO SCALE

NOTES :

1. PROVIDE CHILLED WATER CONDENSATE DRAIN WITH TRAP HEIGHT PER MANUFACTURER'S INSTALLATION SPECIFICATIONS AND REQUIREMENTS.
2. PROVIDE MANUFACTURER'S INTEGRAL CONDENSATE PUMP, OR LITTLE GIANT CONDENSATE PUMP MODEL VCMA-20UL, CAPABLE OF 48 GPH AT 10 FT WC; PROVIDE POWER CONNECTION FOR 1/30 HP AT 120V/1/60HZ.

SEQUENCE OF OPERATION

SPLIT SYSTEM DX HEAT PUMP UNITS (AHU-6/HPU-6, AHU-7/HPU-7, L-4)

1. CEILING CASSETTE INDOOR AIR HANDLING UNIT SHALL MAINTAIN THE CONDITIONED SPACE TEMPERATURE AT 75°F (ADJUSTABLE) IN THE COOLING MODE AND 72°F (ADJUSTABLE) IN THE HEATING MODE. THE DIGITAL WALL MOUNTED PROGRAMMABLE THERMOSTAT FURNISHED WITH THE INDOOR UNIT SHALL CONTROL THE SPACE TEMPERATURE WHERE THE UNIT IS SERVING. REFER TO DRAWINGS FOR THERMOSTAT LOCATIONS
2. OUTDOOR AIR COOLED HEAT PUMP UNIT SHALL BE STARTED WHENEVER THERE IS A CALL FOR COOLING OR HEATING BY THE WALL MOUNTED PROGRAMMABLE THERMOSTAT.
3. AT A MINIMUM, PROGRAMMABLE THERMOSTAT SHALL B E CAPABLE OF SEVEN DAY SCHEDULE, OCCUPIED/UNOCCUPIED SET POINTS CONTROL AND AUTO CHANGEOVER BETWEEN COOLING AND HEATING.
4. MINIMUM REQUIRED MAKEUP VENTILATION OUTSIDE AIR FOR THE AREAS SERVED BY THE CEILING CASSETTE HEAT PUMP UNITS SHALL BE DUCTED FROM AN OUTSIDE AIR INTAKE LOUVER.
5. OUTSIDE AIR INTAKE LOUVER WITH MOTORIZED DAMPER SHALL BE HARDWIRE INTERLOCKED TO BOTH CEILING CASSETTE INDOOR AIR HANDLING UNITS SUPPLY FAN MOTORS TO OPEN WHENEVER THE FAN IS STARTED, AND CLOSE WHENEVER IT STOPS.
6. INTENT IS FOR EQUIPMENT TO OPERATE STAND ALONE.

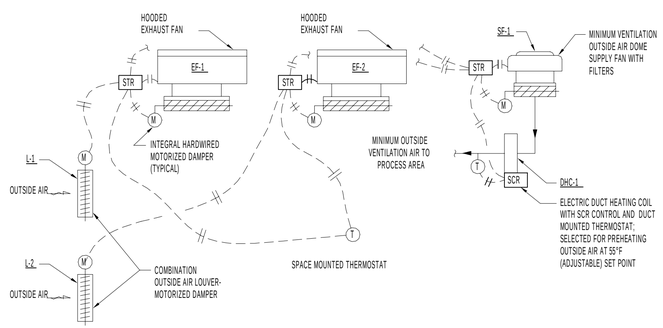

PROCESS AREA VENTILATION SYSTEM WITH MAKEUP AIR LOUVERS AND MINIMUM VENTILATION SYSTEM (EF-1 / L-1, EF-2 / L-2N AND SF-1 / DHC-1 / ALT L-3)

NOT TO SCALE

NOTES :

1. PROVIDE CHILLED WATER CONDENSATE DRAIN WITH TRAP HEIGHT PER MANUFACTURER'S INSTALLATION SPECIFICATIONS AND REQUIREMENTS.
2. PROVIDE MANUFACTURER'S INTEGRAL CONDENSATE PUMP, OR LITTLE GIANT CONDENSATE PUMP MODEL VCMA-20UL, CAPABLE OF 48 GPH AT 10 FT WC; PROVIDE POWER CONNECTION FOR 1/30 HP AT 120V/1/60HZ.

SEQUENCE OF OPERATION

CURB MOUNTED HOODED EXHAUST FANS (EF-1/L-1, EF-2/L-2)

1. THE EXHAUST FANS SHALL START WHEN THE SPACE TEMPERATURE (SIGNALED BY THE WALL-MOUNTED THERMOSTAT) IS ABOVE 80°F (ADJUSTABLE). EACH FANS' INTEGRAL MOTORIZED ISOLATION DAMPER SHALL BE HARDWIRE INTERLOCKED TO OPEN WHENEVER THE FAN IS STARTED, AND TO STOP WHENEVER THE FAN STOPS. THE EXHAUST FANS SHALL STOP WHEN THE SPACE TEMPERATURE IS BELOW 78°F (MANUALLY ADJUSTABLE).
2. THE MINIMUM VENTILATION SUPPLY FAN SHALL OPERATE WHENEVER THE SUPPLY FAN IS NOT OPERATING. THE FAN SHALL BE INTERLOCKED WITH ITS OWN INTEGRAL MOTORIZED ISOLATION DAMPER. THE DAMPER SHALL BE OPENED WHEN FAN IS STARTED AND SHALL BE CLOSED WHEN FAN IS STOPPED.
4. EACH EXHAUST FAN'S DEDICATED OUTSIDE AIR MOTORIZED DAMPER SHALL BE HARDWIRE INTERLOCKED TO OPEN WHENEVER THAT FAN STARTS, AND CLOSE WHENEVER IT STOPS.
5. INTENT IS FOR EQUIPMENT TO OPERATE STAND ALONE.

MINIMUM VENTILATION OUTSIDE AIR SUPPLY FAN (SF-1)

1. MINIMUM VENTILATION OUTSIDE AIR SUPPLY FAN SHALL PROVIDE MINIMUM REQUIRED MAKEUP VENTILATION OUTSIDE AIR FOR THE PROCESS AREA YEAR ROUND. THE SUPPLY FAN SHALL BE HARDWIRE INTERLOCKED TO START WHENEVER THE EXHAUST FANS ARE NOT OPERATING. THE SUPPLY FANS INTEGRAL MOTORIZED ISOLATION DAMPER SHALL BE HARDWIRE INTERLOCKED TO OPEN WHENEVER THE FAN IS STARTED, AND TO STOP WHENEVER THE FAN STOPS.
2. THE INTENT IS FOR THE EQUIPMENT TO OPERATE STAND ALONE.

ELECTRIC DUCT MOUNTED HEATING COIL (DHC-1)

1. THE ELECTRIC DUCT HEATING COIL SHALL BE ENERGIZED WHEN ITS DISCHARGE AIR TEMPERATURE (SIGNALED BY ITS DUCT MOUNTED THERMOSTAT) IS BELOW 55°F (MANUALLY ADJUSTABLE). THE DUCT HEATING COIL SHALL BE DE-ENERGIZED WHEN THE AIR TEMPERATURE IS ABOVE 57°F (MANUALLY ADJUSTABLE).
2. ELECTRIC DUCT HEATING COIL SHALL HAVE MULTIPLE STAGES OF HEATING, INTEGRAL WITH MANUFACTURER'S FACTORY MOUNTED SCR CONTROLS AND SAFETIES.
3. INTENT IS FOR EQUIPMENT TO OPERATE STAND ALONE.

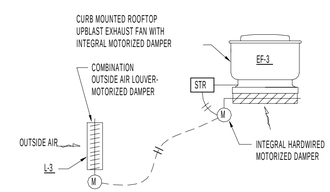

COMPRESSOR ROOM EXHAUST FAN (EF-3/L-3)

NOT TO SCALE

SEQUENCE OF OPERATION

COMPRESSOR ROOM EXHAUST FAN (EF-3/L-3)

1. THE ELECTRIC DUCT HEATING COIL SHALL BE ENERGIZED WHEN ITS DISCHARGE AIR TEMPERATURE (SIGNALED BY ITS DUCT MOUNTED THERMOSTAT) IS BELOW 55°F (MANUALLY ADJUSTABLE). THE DUCT HEATING COIL SHALL BE DE-ENERGIZED WHEN THE AIR TEMPERATURE IS ABOVE 57°F (MANUALLY ADJUSTABLE).
2. SUPPLY FAN SHALL START AND OPERATE CONTINUOUSLY YEAR ROUND AT TO PROVIDE 12 ACH CONTINUOUS VENTILATION FOR THE SODIUM HYPOCHLORITE ROOM. THE EXHAUST FAN SHALL BE HARDWIRE INTERLOCKED TO START WHENEVER THE SUPPLY FAN STARTS.
3. OUTSIDE AIR MOTORIZED DAMPER SHALL BE HARDWIRE INTERLOCKED TO SUPPLY FAN MOTOR TO OPEN WHENEVER THE FAN IS STARTED, AND CLOSE WHENEVER IT STOPS.
4. EXHAUST FAN INTEGRAL ISOLATION DAMPER SHALL BE HARDWIRE INTERLOCKED TO OPEN WHENEVER FAN IS STARTED, AND CLOSE WHENEVER IT STOPS.
5. THE INTENT IS FOR THE EQUIPMENT TO OPERATE STAND ALONE.

ELECTRIC DUCT MOUNTED HEATING COIL (DHC-1)

1. TEST
2. ELECTRIC DUCT HEATING COILS SHALL HAVE MULTIPLE STAGES OF HEATING, INTEGRAL WITH MANUFACTURER'S FACTORY MOUNTED SCR CONTROLS AND SAFETIES.
3. INTENT IS FOR EQUIPMENT TO OPERATE STAND ALONE.

PRELIMINARY - NOT FOR CONSTRUCTION

Drawing Copyright © 2014

CHA
1901 Innovation Drive, Suite 2100
Blacksburg, VA 24060
Main: (518) 453-4500 www.chacompanies.com

DATE	REVISIONS AND RECORD OF ISSUE	NO	BY	CHK	APP
02/27/15	LEVEL 2 DESIGN DOCUMENTS	A			

FN: MODELS\27872-HEOH13-Central (AHU).rvt
SW: V:\Projects\BWA\27872\CAD\Revit\HVAC\27872-CHA FINAL LEVEL 2 REVIT
SAVED: 2/27/2015 5:05:14 PM XREF1:
PLOTTED: XREF2:
USER: XREF3:
DWG VER: A XREF4:

BLACK & VEATCH
Building a world of difference.
Black & Veatch Corporation
Kansas City, Missouri

BEDFORD REGIONAL WATER AUTHORITY
SMITH MOUNTAIN LAKE WTP & LAKES TO FOREST WATER LINE EXTENSION

HVAC - BASE BID DIAGRAMS

DESIGNED: NS
DETAILED: MZ
CHECKED: TSW
APPROVED: Approver
DATE: 12/15/2014

0 1/2 1
IF THIS BAR DOES NOT MEASURE 1" THEN DRAWING IS NOT TO FULL SCALE

CHA PROJECT NO. 27872

H-30-503
SHEET
OF

Drawing Copyright © 2014

CHA
1901 Innovation Drive, Suite 2100
Blacksburg, VA 24060
Main: (518) 453-4500 www.chacompanies.com

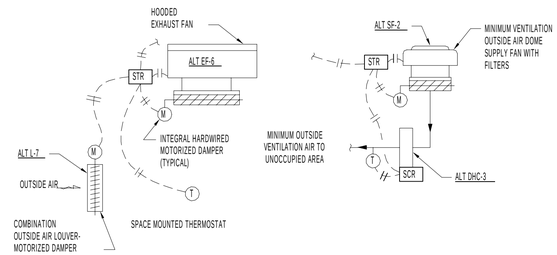

ALTERNATE - OPEN OFFICE 18 VENTILATION SYSTEM WITH MAKEUP AIR LOUVER AND MINIMUM VENTILATION SYSTEM (ALT EF-6 / ALT L-7 AND ALT SF-2 /ALT DHC-3

NOT TO SCALE

NOTES :

1. PROVIDE CHILLED WATER CONDENSATE DRAIN WITH TRAP HEIGHT PER MANUFACTURER'S INSTALLATION SPECIFICATIONS AND REQUIREMENTS.
2. PROVIDE MANUFACTURER'S INTEGRAL CONDENSATE PUMP, OR LITTLE GIANT CONDENSATE PUMP MODEL VCMA-20UL, CAPABLE OF 48 GPH AT 10 FT WC; PROVIDE POWER CONNECTION FOR 1/50 HP AT 120V/1/60HZ.

SEQUENCE OF OPERATION

CURB MOUNTED HOODED EXHAUST FANS (ALT EF-6/ALT L-7)

1. THE EXHAUST FAN SHALL START WHEN THE SPACE TEMPERATURE (SIGNALED BY THE WALL-MOUNTED THERMOSTAT) IS ABOVE 80°F (ADJUSTABLE). THE FAN INTEGRAL MOTORIZED ISOLATION DAMPER SHALL BE HARDWIRE INTERLOCKED TO OPEN WHENEVER THE FAN IS STARTED, AND TO STOP WHENEVER THE FAN STOPS. THE EXHAUST FAN SHALL STOP WHEN THE SPACE TEMPERATURE IS BELOW 78°F (MANUALLY ADJUSTABLE).
2. THE MINIMUM VENTILATION SUPPLY FAN SHALL OPERATE WHENEVER THE SUPPLY FAN IS NOT OPERATING. THE FAN SHALL BE INTERLOCKED WITH ITS OWN INTEGRAL MOTORIZED ISOLATION DAMPER. THE DAMPER SHALL BE OPENED WHEN FAN IS STARTED AND SHALL BE CLOSED WHEN FAN IS STOPPED.
4. OUTSIDE AIR MOTORIZED DAMPER SHALL BE HARDWIRE INTERLOCKED TO OPEN WHENEVER EXHAUST FAN STARTS, AND CLOSE WHENEVER FAN STOPS.
5. INTENT IS FOR EQUIPMENT TO OPERATE STAND ALONE.

MINIMUM VENTILATION OUTSIDE AIR SUPPLY FAN (ALT SF-2)

1. MINIMUM VENTILATION OUTSIDE AIR SUPPLY FAN SHALL PROVIDE MINIMUM REQUIRED MAKEUP VENTILATION OUTSIDE AIR FOR THE PROCESS AREA YEAR ROUND. THE SUPPLY FAN SHALL BE HARDWIRE INTERLOCKED TO START WHENEVER THE EXHAUST FANS ARE NOT OPERATING. THE SUPPLY FANS INTEGRAL MOTORIZED ISOLATION DAMPER SHALL BE HARDWIRE INTERLOCKED TO OPEN WHENEVER THE FAN IS STARTED, AND TO STOP WHENEVER THE FAN STOPS.
2. THE INTENT IS FOR THE EQUIPMENT TO OPERATE STAND ALONE.

ELECTRIC DUCT MOUNTED HEATING COIL (ALT DHC-3)

1. THE ELECTRIC DUCT HEATING COIL SHALL BE ENERGIZED WHEN ITS DISCHARGE AIR TEMPERATURE (SIGNALED BY ITS DUCT MOUNTED THERMOSTAT) IS BELOW 55°F (MANUALLY ADJUSTABLE). THE DUCT HEATING COIL SHALL BE DE-ENERGIZED WHEN THE AIR TEMPERATURE IS ABOVE 57°F (MANUALLY ADJUSTABLE).
2. ELECTRIC DUCT HEATING COIL SHALL HAVE MULTIPLE STAGES OF HEATING, INTEGRAL WITH MANUFACTURER'S FACTORY MOUNTED SCR CONTROLS AND SAFETIES.
3. INTENT IS FOR EQUIPMENT TO OPERATE STAND ALONE.

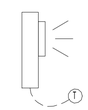

ALTERNATE - ELECTRIC PROPELLER UNIT HEATERS (ALT UH-11 THRU 14)

NOT TO SCALE

NOTES :

1. PROVIDE MANUFACTURER'S THERMOSTAT THERMAL BREAK MOUNTING ACCESSORY.

SEQUENCE OF OPERATION

ELECTRIC PROPELLER UNIT HEATERS (ALT UH-11 THRU 14)

1. ELECTRIC UNIT HEATERS (UH) SHALL PROVIDE AUXILIARY ELECTRIC FREEZE PROTECTION HEATING FOR THE PROCESS AREA, SELECTED AT A 55°F SPACE TEMPERATURE SETPOINT.
2. ELECTRIC UNIT HEATER SHALL START, WHEN THE SPACE TEMPERATURE (SIGNALED BY ITS WALL MOUNTED THERMOSTAT) IS BELOW 55°F (MANUALLY ADJUSTABLE). THE UNIT HEATER SHALL STOP WHEN THE TEMPERATURE OF THE SPACE IS ABOVE 57°F (MANUALLY ADJUSTABLE).
3. INTENT IS FOR EQUIPMENT TO OPERATE STAND ALONE.

SEQUENCES OF OPERATION, GENERAL

THE SEQUENCES OF OPERATION ARE PROVIDED TO ASSIST IN THE FAMILIARIZATION WITH THE CONTROL LOGIC PRESENTED ON THE SYSTEM SCHEMATICS. THE SEQUENCES ARE NOT INTENDED TO BE ALL INCLUSIVE.

IT IS UNDERSTOOD THAT UPON A CONTROL LOOP SETPOINT BEING SATISFIED, EQUIPMENT SHUTDOWN OR EQUIPMENT FAILURE, THE REVERSE SEQUENCE FROM WHAT IS DESCRIBED SHALL OCCUR TO SHUTDOWN SYSTEMS OR STOP EQUIPMENT IN A CONTROLLED MANNER.

SOME OF THE SIMPLER, REPETITIVE LOGIC NECESSARY HAS NOT BEEN INCLUDED IN THE SEQUENCES.

THE CONTROL SYSTEM SEQUENCE OF OPERATION SHALL BE DEVELOPED WITH THE INPUT, AND FINAL APPROVAL, OF THE OWNER.

PRELIMINARY - NOT FOR CONSTRUCTION

02/27/15	LEVEL 2 DESIGN DOCUMENTS	A	NO	BY CHK APP
DATE	REVISIONS AND RECORD OF ISSUE			

PW: V:\Projects\WVA\27872\DGN\Mechanical\27872-MECH13-Central (RUA).rvt
SW:
SAVED: 2/27/2015 5:05:14 PM
PLOTTED:
USER:
DWG VER: A
XREF1:
XREF2:
XREF3:
XREF4:

BLACK & VEATCH
Building a world of difference.
Black & Veatch Corporation
Kansas City, Missouri

BEDFORD REGIONAL WATER AUTHORITY
SMITH MOUNTAIN LAKE WTP & LAKES TO FOREST WATER LINE EXTENSION

HVAC - ALTERNATE PLAN DIAGRAMS

DESIGNED: NS
DETAILED: MZ
CHECKED: TSW
APPROVED: Approver
DATE: 12/15/2014

0 1/2 1
IF THIS BAR DOES NOT MEASURE 1" THEN DRAWING IS NOT TO FULL SCALE

CHA PROJECT NO. 27872

H-30-504
SHEET
OF

D70B90

Drawing Copyright © 2014

CHA
1901 Innovation Drive, Suite 2100
Blacksburg, VA 24060
Main: (518) 453-4500 www.chacompanies.com

SPLIT SYSTEM HEAT PUMP AIR HANDLING UNIT SCHEDULE

TAG	LOCATION	SERVICE	TYPE	CFM	OA CFM	ESP (IN WC)	FAN (HP)	DX HEAT PUMP COIL DATA									AUXILIARY ELECTRIC HEAT DATA				COMPRESSOR TYPE	INDOOR UNIT ELECTRICAL DATA						OUTDOOR UNIT ELECTRICAL DATA						SEER	HSPF	MANUFACTURER & MODEL#
								COOLING CAPACITY						HEATING CAPACITY (MBH)	REF TYPE	MAX FACE VELOCITY (FPM)	EAT (°F)	LAT (°F)	NO. OF ELEC HEAT STAGES	CAPACITY KW		VOLTS	PH	HZ	MCA	MOCP	FACTORY DISCONNECT	VOLTS	PH	HZ	MCA	MOCP	FACTORY DISCONNECT			
								EAT DB (°F)	EAT WB (°F)	LAT DB (°F)	LAT WB (°F)	TOTAL MBH	SENSIBLE MBH																							
AHU-1 / HPU-1	INDOOR UNIT: MEZZANINE ABOVE AREA SERVED OUTDOOR UNIT: OUTSIDE ON GRADE	INDIVIDUAL OFFICES & KITCHEN	DUCTED INDOOR AIR HANDLER SPLIT SYSTEM HEAT PUMP	1,245	300	0.8	0.5	74.4	61.6	5.7	49.9	39.5	31.6	39.0	R-410A	500	60.0	87.0	2	10.8	SCROLL	208	1	60	70.0	75.0	YES	208	1	60	27.0	45.0	NO	15.0	9.0	INDOOR: TRANE GAM5B0C42M-1S OUTDOOR: TRANE 4TWB4042G1000
AHU-2 / HPU-2	INDOOR UNIT: MEZZANINE ABOVE AREA SERVED OUTDOOR UNIT: OUTSIDE ON GRADE	OPEN OFFICE	DUCTED INDOOR AIR HANDLER SPLIT SYSTEM HEAT PUMP	1,820	200	0.8	1.0	74.0	61.3	51.2	50.3	54.7	44.7	54.5	R-410A	500	60.0	8.1	2	10.8	RECIPROCATING	208	1	60	75.0	95.0	YES	208	1	60	34.0	60.0	NO	14.0	8.2	INDOOR: TRANE GAM5B0C60M-1S OUTDOOR: TRANE 4TWB4061E1000
AHU-3 / HPU-3	INDOOR UNIT: MEZZANINE ABOVE AREA SERVED OUTDOOR UNIT: OUTSIDE ON GRADE	CONTROL ROOM	DUCTED INDOOR AIR HANDLER SPLIT SYSTEM HEAT PUMP	1,400	265	0.8	0.75	74.0	61.3	50.9	49.4	45.1	34.7	47.0	R-410A	500	60.0	84.4	2	10.8	SCROLL	208	1	60	73.0	95.0	YES	208	1	60	30.0	50.0	NO	15.0	8.5	INDOOR: TRANE GAM5B0C48M-1S OUTDOOR: TRANE 4TWB4049E1000
AHU-4 / HPU-4	INDOOR UNIT: ABOVE STORAGE ROOM OUTDOOR UNIT: OUTSIDE ON GRADE	LAB	DUCTED INDOOR AIR HANDLER SPLIT SYSTEM HEAT PUMP	525	100	0.8	0.33	78.0	65.0	54.0	52.6	18.8	13.4	17.2	R-410A	500	60.0	94.7	1	5.76	RECIPROCATING	208	1	60	38.0	40.0	YES	208	1	60	10.0	15.0	NO	15.0	8.5	INDOOR: TRANE GAM5B0A18M-1S OUTDOOR: TRANE 4TWB4018G1000
AHU-5 / HPU-5	INDOOR UNIT: MEZZANINE ABOVE AREA SERVED OUTDOOR UNIT: OUTSIDE ON GRADE	NETWORK ROOM	DUCTED INDOOR AIR HANDLER SPLIT SYSTEM HEAT PUMP	730	50	0.8	0.33	76.0	63.0	53.5	52.0	22.5	17.6	21.8	R-410A	500	60.0	85.0	1	5.76	RECIPROCATING	208	1	60	38.0	40.0	YES	208	1	60	12.0	20.0	NO	14.75	8.5	INDOOR: TRANE GAM5B0A24M-1S OUTDOOR: TRANE 4TWB4024G1000
AHU-6/HPU-6	INDOOR UNIT: EXPANSION OUTDOOR UNIT: OUTSIDE ON GRADE	OPEN OFFICE 18	DUCTED INDOOR AIR HANDLER SPLIT SYSTEM HEAT PUMP	2,400	400	0.75	2.0	74.1	61.4	51.7	50.3	75.9	60.5	44.7	R-410A	500	50.0	69.6	1	14.96	SCROLL	460	3	60	25.6	30.0	NO	460	3	60	17.9	25.0	NO	11.0 (EER)	8.2	INDOOR: TRAN TWE090 OUTDOOR: TRANE TWA090
AHU-7/HPU-7	INDOOR UNIT: ELECTRICAL ROOM OUTDOOR UNIT: OUTSIDE ON GRADE	ELECTRICAL ROOM	DUCTED INDOOR AIR HANDLER SPLIT SYSTEM HEAT PUMP	6,400	160	0.75	5.0	75.4	62.5	53.3	50.6	219.6	159.2	128.6	R-410A	500	54.7	73.4	2	29.92	SCROLL	460	3	60	54.0	60.0	NO	460	3	60	45.5	50.0	NO	10.0 (EER)	7.9	INDOOR: TRAN TWE240 OUTDOOR: TRANE TWA240

REMARKS:
PROVIDE SPLIT SYSTEM HEAT PUMP WITH INDOOR DUCTED AIR HANDLING UNIT WITH MULTIPLE STAGES OF CAPACITY DX ELECTRIC COOLING AND HEATING. PROVIDE INTEGRAL AUXILIARY ELECTRIC HEAT, AND FACTORY MOUNTED AND WIRED HIGH LIMIT TEMPERATURE SWITCH AND AIR FLOW SWITCH. PROVIDE SINGLE POINT POWER CONNECTION AT INDOOR UNIT, WITH LOW VOLTAGE CONTROL TRANSFORMER.LOW VOLTAGE CONTROL TRANSFORMER. ON INDOOR AIR HANDLER, PROVIDE PREMIUM EFFICIENCY MOTOR.

PROVIDE SUPPLY AIR END DUCT CONNECTION AND REAR RETURN AIR DUCT CONNECTION. PROVIDE DUCT MOUNTED OUTSIDE AIR AND RETURN AIR DAMPERS, EACH CONTROLLED BY AN INDEPENDENT MOTOR ACTUATOR. PROVIDE INTERNAL DRAIN PAN UNDERNEATH DX COOLING COIL WITH CONDENSATE DRAIN CONNECTION; PROVIDE AUXILIARY DRAIN PAN UNDERNEATH ENTIRE INDOOR AIR HANDLING UNIT WITH SEPARATE CONDENSATE DRAIN LINE. PROVIDE 2" PLEATED MEDIA MERV 8 FILTERS AND DIRTY FILTER SWITCH. PROVIDE ALL NECESSARY ACCESSORIES AND APPURTENANCES FOR INSTALLING OUTDOOR AIR HANDLING UNIT.

PROVIDE INTEGRAL HOT GAS CAPACITY CONTROL AND HUMIDITY CONTROL DEVICE AS MADE BY RAWAL DEVICES, INC., MODEL APR. PROVIDE DEVICE FROM MANUFACTURER; FIELD MOUNTING, INSTALLATION, PIPING, CONNECTIONS AND SET UP BY UNIT MANUFACTURER FACTORY TECHNICIAN; MATCH CONTROL DEVICE CAPACITY TO HEAT PUMP CAPACITY. PROVIDE ALL NECESSARY COMPONENTS, PIPING, ACCESSORIES AND APPURTENANCES INCLUDING DE-SUPERHEATER AND LIQUID INJECTION VALVE. HOT GAS CAPACITY CONTROL DEVICE SHALL BE INTEGRALLY CONTROLLED AS PART OF PACKAGED HEAT PUMP.

PROVIDE WALL MOUNTED PROGRAMMABLE THERMOSTAT CAPABLE OF STANDALONE CONTROL, INCLUDING BUT NOT LIMITED TO, SEVEN DAY PROGRAMMING, INDEPENDENT COOLING AND HEATING SET POINTS, AUTOMATIC CHANGEOVER BETWEEN COOLING AND HEATING AND AUTO FAN CYCLING.

FAN SCHEDULE

TAG	LOCATION	AREA	SERVICE	TYPE	CFM	ESP (IN WG)	BHP	FAN MOTOR DATA				MANUFACTURER & MODEL#	REMARKS
								RPM	HP	VOLT	PH		
EF-1	ROOFTOP	PROCESS	EXHAUST	CENTRIFUGAL HOODED EXHAUST, BELT-DRIVE	20,000	0.75	4.86	1,725	7.5	460	3	GREENHECK MODEL LB-54-75	PROVIDE HOODED EXHAUST CENTRIFUGAL FAN, AMCA RATED WITH PREMIUM EFFICIENCY MOTOR. TEFC WITH BELT DRIVE, THERMAL OVERLOAD PROTECTION AND ADJUSTABLE SHEAVES. PROVIDE FACTORY MOUNTED AND WIRED NEMA DISCONNECT SWITCH. PROVIDE CONTROLS TRANSFORMER AS NECESSARY TO COORDINATE FAN MOTOR VOLTAGE WITH DAMPER MOTOR VOLTAGE. PROVIDE LIFTING LUGS, 300 SERIES STAINLESS STEEL SHAFT, 300 SERIES STAINLESS STEEL FASTENERS, HOOD HASPS, TIE-DOWN EYELETS, STAINLESS STEEL INSECT SCREEN AND 24" HIGH ROOF CURB WITH DAMPER TRAY AND INTERNAL MOUNT MOTORIZED DAMPER (460 VAC); MOTORIZED DAMPER SHALL BE FACTORY HARDWIRE INTERLOCKED TO FAN MOTOR. PROVIDE MANUFACTURER'S HINGED CURB CAP AND CURB SEAL AS NECESSARY. PROVIDE EPOXY COATING FOR ENTIRE FAN WITH COMPONENTS SUITABLE FOR A CORROSIVE ENVIRONMENT.
EF-2	ROOFTOP	PROCESS	EXHAUST	CENTRIFUGAL HOODED EXHAUST, BELT-DRIVE	20,000	0.75	4.86	1,725	7.5	460	3	GREENHECK MODEL LB-54-75	PROVIDE HOODED EXHAUST CENTRIFUGAL FAN, AMCA RATED WITH PREMIUM EFFICIENCY MOTOR. TEFC WITH BELT DRIVE, THERMAL OVERLOAD PROTECTION AND ADJUSTABLE SHEAVES. PROVIDE FACTORY MOUNTED AND WIRED NEMA DISCONNECT SWITCH. PROVIDE CONTROLS TRANSFORMER AS NECESSARY TO COORDINATE FAN MOTOR VOLTAGE WITH DAMPER MOTOR VOLTAGE. PROVIDE LIFTING LUGS, 300 SERIES STAINLESS STEEL SHAFT, 300 SERIES STAINLESS STEEL FASTENERS, HOOD HASPS, TIE-DOWN EYELETS, STAINLESS STEEL INSECT SCREEN AND 24" HIGH ROOF CURB WITH DAMPER TRAY AND INTERNAL MOUNT MOTORIZED DAMPER (460 VAC); MOTORIZED DAMPER SHALL BE FACTORY HARDWIRE INTERLOCKED TO FAN MOTOR. PROVIDE MANUFACTURER'S HINGED CURB CAP AND CURB SEAL AS NECESSARY. PROVIDE EPOXY COATING FOR ENTIRE FAN WITH COMPONENTS SUITABLE FOR A CORROSIVE ENVIRONMENT.
EF-3	ROOFTOP	COMPRESSOR ROOM	EXHAUST	CENTRIFUGAL UPBLAST EXHAUST, DIRECT-DRIVE	2,000	0.75	0.52	1,725	3/4	120	1	GREENHECK MODEL CUE-141-VG	PROVIDE CENTRIFUGAL UPBLAST EXHAUST FAN, AMCA RATED WITH PREMIUM EFFICIENCY MOTOR, WITH DIRECT DRIVE MOTOR, THERMAL OVERLOAD PROTECTION . PROVIDE FACTORY MOUNTED AND WIRED NEMA-3 DISCONNECT SWITCH. PROVIDE CONTROLS TRANSFORMER AS NECESSARY TO COORDINATE FAN MOTOR VOLTAGE WITH DAMPER MOTOR VOLTAGE. PROVIDE LIFTING LUGS, 300 SERIES STAINLESS STEEL SHAFT, 300 SERIES STAINLESS STEEL FASTENERS, HOOD HASPS, TIE-DOWN EYELETS, AND 24" HIGH ROOF CURB WITH DAMPER TRAY AND INTERNAL MOUNT MOTORIZED DAMPER (460 VAC); MOTORIZED DAMPER SHALL BE FACTORY HARDWIRE INTERLOCKED TO FAN MOTOR. PROVIDE MANUFACTURER'S HINGED CURB CAP AND CURB SEAL AS NECESSARY. PROVIDE EPOXY COATING FOR ENTIRE FAN WITH COMPONENTS SUITABLE FOR CORROSIVE ENVIRONMENTS.
EF-4	ROOFTOP	COED LOCKERS & JANITORS CLOSET	EXHAUST	CENTRIFUGAL DOWNBLAST EXHAUST, BELT-DRIVE	285	0.50	0.05	1,725	1/4	120	1	GREENHECK MODEL G-098-VG	PROVIDE DOWNBLAST CENTRIFUGAL FAN, AMCA RATED WITH PREMIUM EFFICIENCY MOTOR. TEFC WITH BELT DRIVE, THERMAL OVERLOAD PROTECTION AND ADJUSTABLE SHEAVES. PROVIDE FACTORY MOUNTED AND WIRED NEMA DISCONNECT SWITCH. PROVIDE CONTROLS TRANSFORMER AS NECESSARY TO COORDINATE FAN MOTOR VOLTAGE WITH DAMPER MOTOR VOLTAGE. PROVIDE LIFTING LUGS, 300 SERIES STAINLESS STEEL SHAFT, 300 SERIES STAINLESS STEEL FASTENERS, HOOD HASPS, TIE-DOWN EYELETS, ALUMINUM INSECT SCREEN AND 24" HIGH ROOF CURB WITH DAMPER TRAY AND INTERNAL MOUNT MOTORIZED DAMPER (120 VAC); MOTORIZED DAMPER SHALL BE FACTORY HARDWIRE INTERLOCKED TO FAN MOTOR. PROVIDE MANUFACTURER'S HINGED CURB CAP AND CURB SEAL AS NECESSARY.
EF-5	ROOFTOP	ADMIN AREA TOILETS	EXHAUST	CENTRIFUGAL DOWNBLAST EXHAUST, BELT-DRIVE	300	0.75	0.07	1,725	1/6	120	1	GREENHECK MODEL GB-085-VG	PROVIDE DOWNBLAST CENTRIFUGAL FAN, AMCA RATED WITH PREMIUM EFFICIENCY MOTOR. TEFC WITH BELT DRIVE, THERMAL OVERLOAD PROTECTION AND ADJUSTABLE SHEAVES. PROVIDE FACTORY MOUNTED AND WIRED NEMA DISCONNECT SWITCH. PROVIDE CONTROLS TRANSFORMER AS NECESSARY TO COORDINATE FAN MOTOR VOLTAGE WITH DAMPER MOTOR VOLTAGE. PROVIDE LIFTING LUGS, 300 SERIES STAINLESS STEEL SHAFT, 300 SERIES STAINLESS STEEL FASTENERS, HOOD HASPS, TIE-DOWN EYELETS, ALUMINUM INSECT SCREEN AND 24" HIGH ROOF CURB WITH DAMPER TRAY AND INTERNAL MOUNT MOTORIZED DAMPER (120 VAC); MOTORIZED DAMPER SHALL BE FACTORY HARDWIRE INTERLOCKED TO FAN MOTOR. PROVIDE MANUFACTURER'S HINGED CURB CAP AND CURB SEAL AS NECESSARY.
ALT EF-6	ROOFTOP	OPEN OFFICE 18 (ALTERNATE)	EXHAUST	CENTRIFUGAL HOODED EXHAUST, BELT-DRIVE	12,000	0.75	2.95	1,725	5/0	460	3	GREENHECK MODEL LB-36-??	PROVIDE HOODED EXHAUST CENTRIFUGAL FAN, AMCA RATED WITH PREMIUM EFFICIENCY MOTOR, TEFC WITH BELT DRIVE, THERMAL OVERLOAD PROTECTION AND ADJUSTABLE SHEAVES. PROVIDE FACTORY MOUNTED AND WIRED NEMA DISCONNECT SWITCH. PROVIDE CONTROLS TRANSFORMER AS NECESSARY TO COORDINATE FAN MOTOR VOLTAGE WITH DAMPER MOTOR VOLTAGE. PROVIDE LIFTING LUGS, 300 SERIES STAINLESS STEEL SHAFT, 300 SERIES STAINLESS STEEL FASTENERS, HOOD HASPS, TIE-DOWN EYELETS, ALUMINUM INSECT SCREEN AND 24" HIGH ROOF CURB WITH DAMPER TRAY AND INTERNAL MOUNT MOTORIZED DAMPER (460 VAC); MOTORIZED DAMPER SHALL BE FACTORY HARDWIRE INTERLOCKED TO FAN MOTOR. PROVIDE MANUFACTURER'S HINGED CURB CAP AND CURB SEAL AS NECESSARY. PROVIDE EPOXY COATING FOR ENTIRE FAN WITH COMPONENTS SUITABLE FOR A CORROSIVE ENVIRONMENT.
SF-1	ROOFTOP	PROCESS	SUPPLY	CENTRIFUGAL DOME SUPPLY, BELT-DRIVE	1,600	1.00	0..52	1,750	3/4	120	1	GREENHECK MODEL AS-16-428-A7	PROVIDE DOME CENTRIFUGAL SUPPLY FAN, AMCA RATED WITH PREMIUM EFFICIENCY MOTOR, TEFC WITH SPEED CONTROLLER AND THERMAL OVERLOAD PROTECTION. PROVIDE FACTORY MOUNTED AND WIRED NEMA-4 DISCONNECT SWITCH. PROVIDE CONTROLS TRANSFORMER AS NECESSARY TO COORDINATE FAN MOTOR VOLTAGE WITH DAMPER MOTOR VOLTAGE. PROVIDE LIFTING LUGS, 300 SERIES STAINLESS STEEL SHAFT, 300 SERIES STAINLESS STEEL FASTENERS, HOOD HASPS, TIE-DOWN EYELETS, ALUMINUM 2" THICK WASHABLE ALUMINUM FILTERS AND 24" HIGH ROOF CURB WITH DAMPER TRAY AND INTERNAL MOUNT MOTORIZED DAMPER (120 VAC); MOTORIZED DAMPER SHALL BE FACTORY HARDWIRE INTERLOCKED TO FAN MOTOR. PROVIDE MANUFACTURER'S HINGED CURB CAP AND CURB SEAL AS NECESSARY.
ALT SF-2	ROOFTOP	OPEN OFFICE 18 (ALTERNATE)	SUPPLY	CENTRIFUGAL DOME SUPPLY, BELT-DRIVE	450	0.50	0.11	1,750	1/2	120	1	GREENHECK MODEL AS-16-420-A5	PROVIDE DOME CENTRIFUGAL SUPPLY FAN, AMCA RATED WITH PREMIUM EFFICIENCY MOTOR, TEFC WITH SPEED CONTROLLER AND THERMAL OVERLOAD PROTECTION. PROVIDE FACTORY MOUNTED AND WIRED NEMA-4 DISCONNECT SWITCH. PROVIDE CONTROLS TRANSFORMER AS NECESSARY TO COORDINATE FAN MOTOR VOLTAGE WITH DAMPER MOTOR VOLTAGE. PROVIDE LIFTING LUGS, 300 SERIES STAINLESS STEEL SHAFT, 300 SERIES STAINLESS STEEL FASTENERS, HOOD HASPS, TIE-DOWN EYELETS, ALUMINUM 2" THICK WASHABLE ALUMINUM FILTERS AND 24" HIGH ROOF CURB WITH DAMPER TRAY AND INTERNAL MOUNT MOTORIZED DAMPER (120 VAC); MOTORIZED DAMPER SHALL BE FACTORY HARDWIRE INTERLOCKED TO FAN MOTOR. PROVIDE MANUFACTURER'S HINGED CURB CAP AND CURB SEAL AS NECESSARY.

PRELIMINARY - NOT FOR CONSTRUCTION

02/27/15	LEVEL 2 DESIGN DOCUMENTS	A	
DATE	REVISIONS AND RECORD OF ISSUE	NO	BY CHK APP

PW: V:\Projects\WVA\27872\CAD\Civil\Models\27-2_CHA FINAL LEVEL 2 REV1.rvt
SW: XREF1:
SAVED: 2/27/2015 5:05:14 PM XREF2:
PLOTTED: XREF3:
USER: DWG VER: A XREF4:

BLACK & VEATCH Building a world of difference.
Black & Veatch Corporation
Kansas City, Missouri

BEDFORD REGIONAL WATER AUTHORITY
SMITH MOUNTAIN LAKE WTP & LAKES TO FOREST WATER LINE EXTENSION

HVAC - SCHEDULES

DESIGNED: NS
DETAILED: MZ, PDL
CHECKED: TSW
APPROVED: Approver
DATE: 12/15/2014

0 1/2 1
IF THIS BAR DOES NOT MEASURE 1" THEN DRAWING IS NOT TO FULL SCALE

CHA PROJECT NO. 27872

H-30-601
SHEET
OF

D7690

Drawing Copyright © 2014

CHA
1901 Innovation Drive, Suite 2100
Blacksburg, VA 24060
Main: (518) 453-4500 www.chacompanies.com

ELECTRIC UNIT HEATERS SCHEDULE

TAG	LOCATION	SERVICE	TYPE	BTUI/hr	CFM	THROW (FT)	EAT (°F)	LAT (°F)	ELECTRICAL KW	ELECTRICAL VOLT	ELECTRICAL PH	ELECTRICAL MCA	FAN MOTOR DATA RPM	FAN MOTOR DATA HP	FAN MOTOR DATA VOLT	FAN MOTOR DATA PH	FAN MOTOR DATA WATTS	MOUNTING HEIGHT (FT)	MANUFACTURER & MODEL#	REMARKS
UH-01	WTP EQUIPMENT AREA	FREEZE PROTECTION HEATING	ELECTRIC UNIT HEATER - PROPELLER	51,200	1,100	32	55.0	98.1	15.0	480	3	18.1	1,550	1/20	480	3	37	12'	TRANE, MODEL UHEC-153DACA	PROVIDE UNIT HEATER WITH MANUFACTURER'S THERMOSTAT FOR WALL MOUNTING (WITH THERMAL BREAK MOUNTING ACCESSORY) AND INTEGRAL UNIT MOUNTED DISCONNECT SWITCH; PROVIDE MANUFACTURER'S MOUNTING BRACKETS AND HARDWARE FOR CEILING OR WALL MOUNTING AND WITH EPOXY COATING SUITABLE FOR CORROSIVE ENVIRONMENT. PROVIDE ANY NECESSARY ACCESSORIES AND APPURTENANCES FOR UNIT HEATERS INSTALLATION.
UH-02	WTP EQUIPMENT AREA	FREEZE PROTECTION HEATING	ELECTRIC UNIT HEATER - PROPELLER	51,200	1,100	32	55.0	98.1	15.0	480	3	18.1	1,550	1/20	480	3	37	12'	TRANE, MODEL UHEC-153DACA	
UH-03	WTP EQUIPMENT AREA	FREEZE PROTECTION HEATING	ELECTRIC UNIT HEATER - PROPELLER	51,200	1,100	32	55.0	98.1	15.0	480	3	18.1	1,550	1/20	480	3	37	12'	TRANE, MODEL UHEC-153DACA	
UH-04	WTP EQUIPMENT AREA	FREEZE PROTECTION HEATING	ELECTRIC UNIT HEATER - PROPELLER	51,200	1,100	32	55.0	98.1	15.0	480	3	18.1	1,550	1/20	480	3	37	12'	TRANE, MODEL UHEC-153DACA	
UH-05	WTP EQUIPMENT AREA	FREEZE PROTECTION HEATING	ELECTRIC UNIT HEATER - PROPELLER	51,200	1,100	32	55.0	98.1	15.0	480	3	18.1	1,550	1/20	480	3	37	12'	TRANE, MODEL UHEC-153DACA	
UH-06	WTP EQUIPMENT AREA	FREEZE PROTECTION HEATING	ELECTRIC UNIT HEATER - PROPELLER	51,200	1,100	32	55.0	98.1	15.0	480	3	18.1	1,550	1/20	480	3	37	12'	TRANE, MODEL UHEC-153DACA	
UH-07	WTP EQUIPMENT AREA	FREEZE PROTECTION HEATING	ELECTRIC UNIT HEATER - PROPELLER	51,200	1,100	32	55.0	98.1	15.0	480	3	18.1	1,550	1/20	480	3	37	12'	TRANE, MODEL UHEC-153DACA	
UH-08	WTP EQUIPMENT AREA	FREEZE PROTECTION HEATING	ELECTRIC UNIT HEATER - PROPELLER	51,200	1,100	32	55.0	98.1	15.0	480	3	18.1	1,550	1/20	480	3	37	12'	TRANE, MODEL UHEC-153DACA	
UH-09	COMPRESSOR ROOM	FREEZE PROTECTION HEATING	ELECTRIC UNIT HEATER - PROPELLER	17,100	400	12	55.0	94.6	5.0	480	3	6.1	1,550	1/125	480	3	6	9'	TRANE, MODEL UHEC-053DACA	
ALT UH-10	OPEN OFFICE 18 (ALTERNATE)	FREEZE PROTECTION HEATING	ELECTRIC UNIT HEATER - PROPELLER	34,100	700	22	55.0	100.1	10.0	480	3	12.1	1,550	1/50	480	3	14	10'	TRANE, MODEL UHEC-103DACA	
ALT UH-11	OPEN OFFICE 18 (ALTERNATE)	FREEZE PROTECTION HEATING	ELECTRIC UNIT HEATER - PROPELLER	34,100	700	22	55.0	100.1	10.0	480	3	12.1	1,550	1/50	480	3	14	10'	TRANE, MODEL UHEC-103DACA	
ALT UH-12	OPEN OFFICE 18 (ALTERNATE)	FREEZE PROTECTION HEATING	ELECTRIC UNIT HEATER - PROPELLER	34,100	700	22	55.0	100.1	10.0	480	3	12.1	1,550	1/50	480	3	14	10'	TRANE, MODEL UHEC-103DACA	
ALT UH-13	OPEN OFFICE 18 (ALTERNATE)	FREEZE PROTECTION HEATING	ELECTRIC UNIT HEATER - PROPELLER	34,100	700	22	55.0	100.1	10.0	480	3	12.1	1,550	1/50	480	3	14	10'	TRANE, MODEL UHEC-103DACA	

COMBINATION LOUVER/DAMPER SCHEDULE

TAG	LOCATION	AREA	SERVICE	TYPE	WIDTH (IN)	HEIGHT (IN)	FREE AREA (SF)	DESIGN AIRFLOW (CFM)	MAX VELOCITY (FPM)	MATERIAL	FINISH	OPERATOR	MANUFACTURER & MODEL#	REMARKS
L-1	SEE PLAN	PROCESS	OUTSIDE AIR INTAKE FOR EF-1	FIXED BLADE DRAINABLE, WITH INTEGRAL MOTORIZED DAMPER	120	120	50.6	20,000	450	ALUMINUM	KYNAR 2-COATS MINIMUM	120 VAC	GREENHECK ECD-401-120X120 WITH CONTROL ACTUATOR(S)	PROVIDE LOW-LEAKAGE MOTORIZED DAMPER, PROVIDE ALL RELAYS AND WIRING NECESSARY TO HARD-WIRE INTERLOCK DAMPER MOTOR WITH FAN MOTOR; PROVIDE CONTROLS TRANSFORMER AS NECESSARY TO COORDINATE DAMPER MOTOR VOLTAGE WITH FAN MOTOR VOLTAGE. COORDINATE FINAL LOUVER COLOR AND FINISH WITH ARCHITECT; PROVIDE STAINLESS STEEL INSECT SCREEN ON INSIDE. PROVIDE EPOXY COATING FOR ENTIRE LOUVER WITH COMPONENTS SUITABLE FOR CORROSIVE ENVIRONMENTS. AHU-6 SUPPLY
L-2	SEE PLAN	PROCESS	OUTSIDE AIR INTAKE FOR EF-2	FIXED BLADE DRAINABLE, WITH INTEGRAL MOTORIZED DAMPER	120	120	50.6	20,000	450	ALUMINUM	KYNAR 2-COATS MINIMUM	120 VAC	GREENHECK ECD-401-120X120 WITH CONTROL ACTUATOR(S)	PROVIDE LOW-LEAKAGE MOTORIZED DAMPER, PROVIDE ALL RELAYS AND WIRING NECESSARY TO HARD-WIRE INTERLOCK DAMPER MOTOR WITH FAN MOTOR; PROVIDE CONTROLS TRANSFORMER AS NECESSARY TO COORDINATE DAMPER MOTOR VOLTAGE WITH FAN MOTOR VOLTAGE. COORDINATE FINAL LOUVER COLOR AND FINISH WITH ARCHITECT; PROVIDE STAINLESS STEEL INSECT SCREEN ON INSIDE. PROVIDE EPOXY COATING FOR ENTIRE LOUVER WITH COMPONENTS SUITABLE FOR CORROSIVE ENVIRONMENTS. AHU-6 SUPPLY
L-3	SEE PLAN	COMPRESSOR ROOM	OUTSIDE AIR INTAKE FOR EF-3	FIXED BLADE DRAINABLE, WITH INTEGRAL MOTORIZED DAMPER	96	96	32.5	12,000	450	ALUMINUM	KYNAR 2-COATS MINIMUM	120 VAC	GREENHECK ECD-401-96X96 WITH CONTROL ACTUATOR(S)	PROVIDE LOW-LEAKAGE MOTORIZED DAMPER, PROVIDE ALL RELAYS AND WIRING NECESSARY TO HARD-WIRE INTERLOCK DAMPER MOTOR WITH PROVIDE CONTROLS TRANSFORMER AS NECESSARY TO COORDINATE DAMPER MOTOR VOLTAGE WITH FAN MOTOR VOLTAGE. COORDINATE FINAL LOUVER COLOR AND FINISH WITH ARCHITECT; PROVIDE ALUMINUM INSECT SCREEN ON INSIDE. AHU-08 ;
L-4	SEE PLAN	ADMIN AREAS AHUs	MAKEUP OUTSIDE AIR FOR OFFICE AHUs	FIXED BLADE DRAINABLE, WITH INTEGRAL MOTORIZED DAMPER	26	26	1.95	865	450	ALUMINUM	KYNAR 2-COATS MINIMUM	120 VAC	GREENHECK ECD-401-26X26 WITH CONTROL ACTUATOR	PROVIDE LOW-LEAKAGE MOTORIZED DAMPER, PROVIDE ALL RELAYS AND WIRING NECESSARY TO HARD-WIRE INTERLOCK DAMPER MOTOR WITH ELECTRIC DUCT HEATING COIL AND OFFICE AREA AHU SUPPLY FAN MOTORS; PROVIDE CONTROLS TRANSFORMERS AS NECESSARY TO COORDINATE DAMPER MOTOR VOLTAGE WITH FANS MOTOR VOLTAGE. COORDINATE FINAL LOUVER COLOR AND FINISH WITH ARCHITECT; PROVIDE ALUMINUM INSECT SCREEN ON INSIDE. PROVIDE EPOXY COATING FOR ENTIRE LOUVER WITH COMPONENTS SUITABLE FOR CORROSIVE ENVIRONMENTS. DHC-02
L-5	SEE PLAN	OPEN OFFICE 18	OUTSIDE AIR TO AHU-6	FIXED BLADE DRAINABLE, WITH INTEGRAL MOTORIZED DAMPER	20	20	1.06	400	450	ALUMINUM	KYNAR 2-COATS MINIMUM	120 VAC	GREENHECK ECD-401-20X20 WITH CONTROL ACTUATOR	PROVIDE LOW-LEAKAGE MOTORIZED DAMPER, PROVIDE ALL RELAYS AND WIRING NECESSARY TO HARD-WIRE INTERLOCK DAMPER MOTOR WITH PROVIDE CONTROLS TRANSFORMER AS NECESSARY TO COORDINATE DAMPER MOTOR VOLTAGE WITH FAN MOTOR VOLTAGE. COORDINATE FINAL LOUVER COLOR AND FINISH WITH ARCHITECT; PROVIDE ALUMINUM INSECT SCREEN ON INSIDE. AHU-07 ;
L-6	SEE PLAN	ELECTRICAL ROOM	OUTSIDE AIR TO AHU-7	FIXED BLADE DRAINABLE, WITH INTEGRAL MOTORIZED DAMPER	18	18	0.76	160	450	ALUMINUM	KYNAR 2-COATS MINIMUM	120 VAC	GREENHECK ECD-401-18X18 WITH CONTROL ACTUATOR	PROVIDE LOW-LEAKAGE MOTORIZED DAMPER, PROVIDE ALL RELAYS AND WIRING NECESSARY TO HARD-WIRE INTERLOCK DAMPER MOTOR WITH PROVIDE CONTROLS TRANSFORMER AS NECESSARY TO COORDINATE DAMPER MOTOR VOLTAGE WITH FAN MOTOR VOLTAGE. COORDINATE FINAL LOUVER COLOR AND FINISH WITH ARCHITECT; PROVIDE ALUMINUM INSECT SCREEN ON INSIDE. AHU-06 ;
ALT L-7	SEE PLAN	OPEN OFFICE 18 (ALTERNATE)	OUTSIDE AIR INTAKE FOR ALT EF-6	FIXED BLADE DRAINABLE, WITH INTEGRAL MOTORIZED DAMPER	96	96	31.5	12,000	450	ALUMINUM	KYNAR 2-COATS MINIMUM	120 VAC	GREENHECK ECD-401-96X96 WITH CONTROL ACTUATOR(S)	PROVIDE LOW-LEAKAGE MOTORIZED DAMPER, PROVIDE ALL RELAYS AND WIRING NECESSARY TO HARD-WIRE INTERLOCK DAMPER MOTOR WITH FAN MOTOR; PROVIDE CONTROLS TRANSFORMER AS NECESSARY TO COORDINATE DAMPER MOTOR VOLTAGE WITH FAN MOTOR VOLTAGE. COORDINATE FINAL LOUVER COLOR AND FINISH WITH ARCHITECT; PROVIDE ALUMINUM INSECT SCREEN ON INSIDE. EF-2 EXHAUST

REGISTER, GRILLE AND DIFFUSER SCHEDULE

TAG	SERVICE	TYPE	MAX CFM	FACE SIZE	NECK SIZE	PATTERN	APD (IN WG)	MAX NC	MANUFACTURER & MODEL#	REMARKS
SD-01	SUPPLY	SQUARE PLAQUE	125	24"x24"	6"	4-WAY	0.07	22	PRICE ASPD	ALUMINUM SQUARE PLAQUE DIFFUSER. COORDINATE MOUNTING STYLE WITH CEILING.
SD-02	SUPPLY	SQUARE PLAQUE	260	24"x24"	8"	4-WAY	0.09	22	PRICE ASPD	
SD-03	SUPPLY	SQUARE PLAQUE	400	24"x24"	10"	4-WAY	0.11	22	PRICE ASPD	
SD-04	SUPPLY	SQUARE PLAQUE	550	24"x24"	12"	4-WAY	0.13	22	PRICE ASPD	
SD-05	SUPPLY	SQUARE PLAQUE	855	24"x24"	14"	4-WAY	0.23	27	PRICE ASPD	
RG-01	RETURN	PERFORATED	3,500	24"x24"	48"x24"	PERFORATED	0.051	20	PRICE PDDR	ALUMINUM SINGLE DEFLECTION GRILLE WITH INTEGRAL ALUMINUM VOLUME DAMPER. COORDINATE MOUNTING STYLE WITH CEILING.
RG-02	RETURN	PERFORATED	2,250	24"x24"	22"x22"	PERFORATED	0.075	25	PRICE PDDR	
EG-01	EXHAUST	PERFORATED	200	12"x12"	6"x6"	PERFORATED	0.11	20	PRICE PDDR	
TG-01	TRANSFER	PERFORATED	200	12"x12"	10"x10"	PERFORATED	0.007	20	PRICE PDDR	ALUMINUM SINGLE DEFLECTION GRILLE WITH INTEGRAL ALUMINUM VOLUME DAMPER. COORDINATE MOUNTING STYLE WITH CEILING.

ELECTRIC DUCT HEATER SCHEDULE

TAG	LOCATION	SERVICE	TYPE	DUCT SIZE (WXH)	DESIGN CFM	NO. OF CONTROL STEPS	ELECTRICAL KW	ELECTRICAL VOLT	ELECTRICAL PH	ELECTRICAL AMPS	MANUFACTURER & MODEL#	REMARKS
DHC-1	PROCESS	MINIMUM WINTER MAKEUP AIR HEATING / FREEZE PROTECTION	ELECTRIC DUCT MOUNTED HEATER	24"x16"	1,650	3	30.0	480	3	36.2	MARKEL PRODUCTS, CO. PD SERIES, MODEL 4PD30-2416-3-3	PROVIDE WITH MANUFACTURER'S THERMOSTAT FOR DUCT MOUNTING AT ELECTRIC DUCT HEATING COIL DISCHARGE AND ANY REQUIRED CONTROL TRANSFORMER; PROVIDE WITH INTEGRAL HIGH TEMPERATURE LIMIT CONTROL, AND INTEGRAL UNIT MOUNTED DISCONNECT SWITCH. PROVIDE ANY NECESSARY HARDWARE, ACCESSORIES AND APPURTENANCES FOR ELECTRIC DUCT HEATING COIL INSTALLATION.
DHC-2	ABOVE OFFICES	AHU-01 THRU AHU-05 OA PREHEAT	ELECTRIC DUCT MOUNTED HEATER	18"x10"	865	1	10.0	480	3	12.1	MARKEL PRODUCTS, CO. PD SERIES, MODEL 4PD10-1810-3	
ALT DHC-3	OPEN OFFICE 18 (ALTERNATE)	MINIMUM WINTER MAKEUP AIR HEATING / FREEZE PROTECTION	ELECTRIC DUCT MOUNTED HEATER	24"x16"	450	1	10.0	480	3	12.1	MARKEL PRODUCTS, CO. PD SERIES, MODEL 4PD10-1810-3	

PRELIMINARY - NOT FOR CONSTRUCTION

DATE	REVISIONS AND RECORD OF ISSUE	BY	CHK	APP
02/27/15	LEVEL 2 DESIGN DOCUMENTS	HO	A	

FW: V:\Projects\WATER\27872\CAD\Corporate\27-2_CHA FINAL LEVEL 2.RVT
SW: MODELS\27872-MECH13-Central (AHU).rvt
SAVED: 2/27/2015 5:05:15 PM
PLOTTED:
USER:
DWG VER: A
XREF1:
XREF2:
XREF3:
XREF4:

BLACK & VEATCH
Building a world of difference.
Black & Veatch Corporation
Kansas City, Missouri

BEDFORD REGIONAL WATER AUTHORITY
SMITH MOUNTAIN LAKE WTP & LAKES TO FOREST WATER LINE EXTENSION

HVAC - SCHEDULES

DESIGNED: NS
DETAILED: MZ, PDL
CHECKED: TSW
APPROVED: Approver
DATE: 12/15/2014

0 1/2 1
IF THIS BAR DOES NOT MEASURE 1" THEN DRAWING IS NOT TO FULL SCALE

CHA PROJECT NO. 27872

H-30-602
SHEET
OF

D76969

PLUMBING FIXTURE SCHEDULE

TAG	ITEM	MANUFACTURER & MODEL	WASTE	VENT	CW	HW	FITTINGS/ACCESSORIES OR DESIGN DATA	ITEM DESCRIPTION
WC	FLOOR MOUNTED FLOOR OUTLET WATER CLOSET	AMERICAN STANDARD MADERA #2234.001	3"	2"	1"	NA	SLOAN ROYAL LC-111-1.6 FLUSHVALVE OLSONITE #95C SEAT	VITREOUS CHINA, WATER SAVER, SIPHON JET ACTION, ELONGATED BOWL, MEETS ANSI A112.19.2M
HWC	FLOOR MOUNTED FLOOR OUTLET HANDICAP WATER CLOSET	AMERICAN STANDARD MADERA #3462.001	3"	2"	1"	NA	AMERICAN STANDARD SELECTRONIC DC POWER #6065.121.002 FLUSHVALVE OLSONITE #95C SEAT	VITREOUS CHINA, WATER SAVER, SIPHON JET ACTION, ELONGATED BOWL, MEETS ANSI A112.19.2M. MEETS ADA REQUIREMENTS
HUR	WALL-HUNG HANDICAP URINAL	AMERICAN STANDARD #6501.010	2"	1-1/2"	1"	NA	SLOAN ROYAL #186-1 FLUSH VALVE	VITREOUS CHINA, WATER SAVER, WASHOUT ACTION, MEETS ANSI A112.19.2 MOUNT TO ADA GUIDELINES
LAV	COUNTERTOP MOUNT LAVATORY	AMERICAN STANDARD AFFINITY #3420.403	1-1/4"	1-1/4"	1/2"	1/2"	MOEN #8420 SINGLE HANDLE FAUCET AND GRID STRAINER ASSEMBLY	FAUCETS AND STRAINERS TO BE INSTALLED IN INTEGRAL LAV/ COUNTERTOP PROVIDED BY OTHERS
HLAV	COUNTERTOP MOUNT LAVATORY	AMERICAN STANDARD AFFINITY #3420.403	1-1/4"	1-1/4"	1/2"	1/2"	MOEN #8420 SINGLE HANDLE FAUCET AND GRID STRAINER ASSEMBLY	FAUCETS AND STRAINERS TO BE INSTALLED IN INTEGRAL LAV/ COUNTERTOP PROVIDED BY OTHERS
HSH	HANDICAP SHOWER	BRADLEY #HN200-TMV-SF	NA	NA	1/2"	1/2"	NA	BUILT IN ADA COMPLIANT SHOWER WITH CONCEALED SUPPLIES, THERMOSTATIC MIXING VALVE, ADA HOSE ATTACHMENT AND STANDARD SHOWER HEAD
KS	SINGLE BOWL COUNTERTOP SINK	ELKAY SINGLE BOWL #LRAD-2222-60-3	1-1/4"	1-1/4"	1/2"	1/2"	ELKAY #LK-232-S HI-ARC FAUCET ELKAY #LK-99 DRAIN OUTLET	18 GAUGE TYPE 302 STAINLESS STEEL SELF RIMMING SINK FULLY UNDERCOATED
LS	LABORATORY SINK	FISHER HAMILTON EPOXY RESIN SINK #52L468	3"	1-1/2"	1/2"	1/2"	AMERICAN STANDARD LABORATORY FAUCET #7272.820	WHITE EPOXY RESIN SINGLE COMPARTMENT SINK WITH CENTER DRAIN
EWC	ELECTRIC WATER COOLER	ELKAY #EZSTLR8	1-1/2"	1-1/4"	1/2"	NA	NA	DUAL SELF CONTAINED WALL HUNG ELECTRIC WATER COOLER WITH SELF CLOSING TOUCH CONTROLS ON FRONT AND SIDES OF EACH UNIT
SD	SHOWER DRAIN	ZURN #FD-2251	3"	SEE PLAN	NA	NA	NA	CAST IRON SHOWER DRAIN WITH STAINLESS STEEL STRAINER, VANDAL PROOF TOP AND NO HUB OUTLET
MS	MOP SINK	FIAT #SB 2424	3"	1-1/4"	1/2"	1/2"	FIAT #830-AA FAUCET, #889-CC MOP HANGER, #1239-BB ALUMINUM BUMPER GUARD	MOLDED-STONE, 6" HIGH 2" WIDE WALLS, STAINLESS STEEL DRAIN BODY, COMBINATION STAINLESS STEEL DOME STRAINER WITH LINT BASKET. PROVIDE DEEP SEAL P-TRAP
FD	FLOOR DRAIN	JOSAM 30000 SERIES	SEE PLAN	NA	NA	NA	NA	TWO-PIECE BODY WITH ADJUSTABLE STRAINER, WITH WEEPHOLES AND INVERTIBLE COLLAR
EEW	EMERGENCY EYE-FACE WASH (INTERIOR)	BRADLEY #S19214YF	NA	NA	1/2"	1/2"	NA	BARRIER-FREE COMBINATION EYE & FACE WASH WITH STAINLESS STEEL BOWL; COMPLIES WITH ANSI Z358.1
ESH	EMERGENCY SHOWER/EYEWASH (INTERIOR)	BRADLEY #S19314BFSS	NA	NA	1-1/4"	1-1/4"	NA	BARRIER-FREE COMBINATION SHOWER/EYEWASH WITH STAINLESS STEEL SHOWER HEAD, BOWL AND CONSTRUCTION; COMPLIES WITH ANSI Z358.1
EESH	EXTERIOR EMERGENCY SHOWER/EYEWASH	BRADLEY MODEL #S19-300B2S	NA	NA	1-1/4"	1-1/4"	NA	HEAT TRACE COMBINATION SHOWER/EYEWASH WITH STAINLESS STEEL SHOWER HEAD AND BOWL; COMPLIES WITH ANSI Z358.1
DPCO	DECK PLATE CLEANOUT	JAY R. SMITH 4020 SERIES	SEE PLAN	NA	NA	NA	NA	ADJUSTABLE FLOOR CLEANOUT WITH POLISHED BRONZE COVER
WCO	WALL CLEANOUT	JOSAM 58890 SERIES	SEE PLAN	NA	NA	NA	NA	CAST BRONZE COUNTERSUNK PLUG AND POLISHED STAINLESS STEEL ROUND ACCESS COVER PLATE SECURED TO PLUG BY COUNTERSUNK SCREW
SA	SHOCK ABSORBER	JOSAM 75000 SERIES	NA	NA	SEE PLAN	SEE PLAN	NA	STAINLESS STEEL SHELL, ELASTOMER BELLOWS, STAINLESS STEEL ADAPTER AND MALE THREADED PLUG
HB	HOSE BIBB	WATTS #SC8	NA	NA	3/4"	NA	NA	COMBINATION HOSE BIBB WITH SEPARATE TAMPER PROOF VACUUM BREAKER WITH CAST IRON HAND WHEEL AND ADJUSTABLE PACKING NUT
NFHB	NON-FREEZE HOSE BIBB	JAY R. SMITH FIGURE 5509	NA	NA	3/4"	NA	NA	NON-FREEZE, INTEGRAL VACUUM BREAKER, RECESSED BOX, LOCKING COVER AND KEY
RPZ	REDUCED PRESSURE ZONE ASSEMBLY (BACKFLOW PREVENTER)	WATTS SERIES 009	NA	NA	SEE PLAN	NA	NA	EPOXY COATED CAST IRON REDUCED PRESSURE ZONE ASSEMBLY WITH TWO INDEPENDENT SPRING CHECK MODULES, DIFFERENTIAL PRESSURE RELIEF VALVE,
TMV-1	MIXING VALVE	LEONARD #TM-520-LF-RF-R34	NA	NA	3/4"	1"	COLOR-CODED DIAL THERMOMETER, INLET THERMOMETERS	BRONZE BODY CONSTRUCTION; REPLACEABLE POLYMER CHECK SEATS; REMOVABLE STAINLESS STEEL RELIEF VALVE SEAT; QUARTER TURN BALL VALVES
TMV-2	MIXING VALVE	LEONARD #TM-5100-STSTL-EXP	NA	NA	1-1/4"	1-1/4"	COLOR-CODED DIAL THERMOMETER, INLET THERMOMETERS	BRONZE BODY CONSTRUCTION; REPLACEABLE POLYMER CHECK SEATS; REMOVABLE STAINLESS STEEL RELIEF VALVE SEAT; QUARTER TURN BALL VALVES
TP	TRAP PRIMER	JOSAM #88300	NA	NA	1/2"	NA	JOSAM #88250 TRAP SEAL PRIMER VALVE	BRONZE TRAP PRIMER VALVE WITH 1/2" N.P.T. INLET, INTEGRAL BACKFLOW PREVENTER, VACUUM BREAKER PORTS AND 1/2" F.N.P.T. OUTLET

Drawing Copyright © 2014

CHA
1901 Innovation Drive, Suite 2100
Blacksburg, VA 24060
Main: (518) 453-4500 www.chacompanies.com

SYMBOLS

	BALL VALVE
	BALANCING VALVE
	PRESSURE RELIEF VALVE
	SWING CHECK VALVE
	PIPE TURNING IN
	PIPE BREAK
	UNION
	THERMOMETER
	PRESSURE GAUGE

ABBREVIATIONS

ADA	AMERICANS WITH DISABILITY ACT
AFF	ABOVE FINISHED FLOOR
℄	CENTER LINE
CO	CLEANOUT
CW	COLD WATER
DCP	DOMESTIC CIRCULATING PUMP
DN	DOWN
DPCO	DECKPLATE CLEANOUT
EC	ELECTRICAL CONTRACTOR
EEW	EMERGENCY EYE-FACE WASH
ESH	EMERGENCY SHOWER/EYEWASH
EESH	EXTERIOR EMERGENCY SHOWER/EYEWASH
ET	EXPANSION TANK
EWC	ELECTRIC WATER COOLER
FD	FLOOR DRAIN
FLA	FULL LOAD AMPS
FT HD	FEET OF HEAD
GAL	GALLONS
HB	HOSE BIBB
HLAV	HANDICAP LAVATORY
HP	HORSEPOWER
HSH	HANDICAP SHOWER
HUR	HANDICAP URINAL
HW	HOT WATER
HWR	HOT WATER RETURN
HWC	HANDICAP WATER CLOSET
INV	INVERT

ABBREVIATIONS

IN WG	INCH WATER GAGE
KS	KITCHEN SINK
KW	KILOWATT
LAV	LAVATORY
LS	LABORATORY SINK
MAX	MAXIMUM
MIN	MINIMUM
MS	MOP SINK
NFHB	NON-FREEZE HOSE BIBB
PC	PLUMBING CONTRACTOR
PH	PHASE
PSIG	POUNDS PER SQUARE INCH GAGE
RPM	REVOLUTIONS PER MINUTE
RPZ	REDUCED PRESSURE ZONE ASSEMBLY
SA	SHOCK ABSORBER
SAN	SANITARY
SD	SHOWER DRAIN
TMV	THERMOSTATIC MIXING VALVE
TP	TRAP PRIMER
TYP	TYPICAL
T&P	TEMPERATURE AND PRESSURE
USAN	UNDERSLAB SANITARY
V	VENT
VTR	VENT THRU ROOF
WCO	WALL CLEANOUT
WH	WATER HEATER
°F	DEGREES FAHRENHEIT

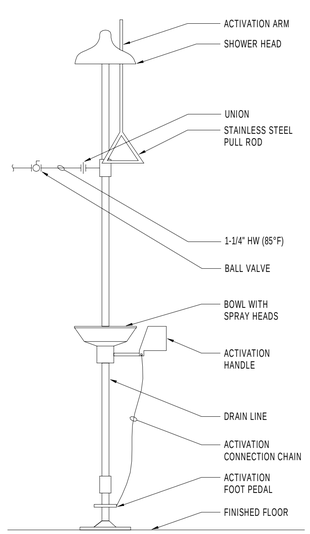

EMERGENCY SHOWER/EYEWASH DETAIL
SCALE: NOT TO SCALE

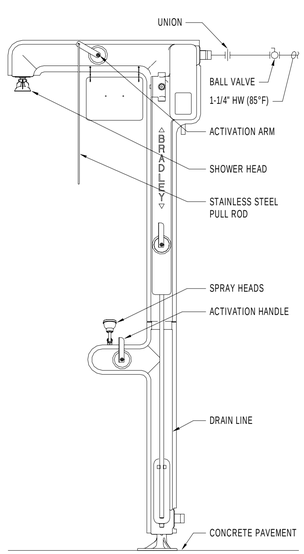

EXTERIOR EMERGENCY SHOWER/EYEWASH DETAIL
SCALE: NOT TO SCALE

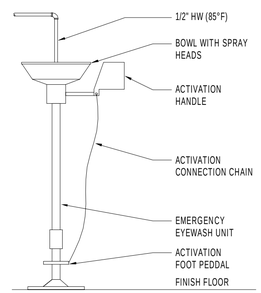

EMERGENCY EYE-FACE WASH DETAIL
SCALE: NOT TO SCALE

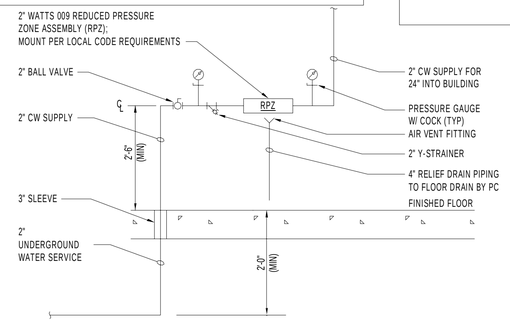

WATER SERVICE ENTRANCE DETAIL
SCALE: NOT TO SCALE

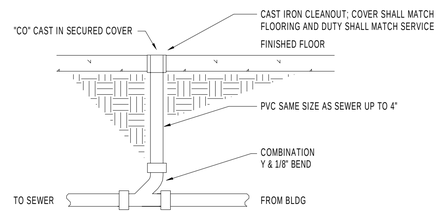

DECK PLATE CLEANOUT DETAIL
SCALE: NOT TO SCALE

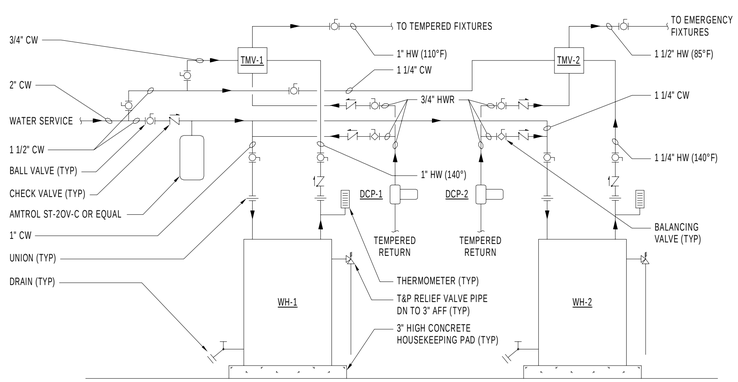

ELECTRIC WATER HEATER DETAIL
SCALE: NOT TO SCALE

CIRCULATING PUMP SCHEDULE

TAG	LOCATION	SERVICE	FLUID	GPM	FT HD	ELECTRICAL				MANUFACTURER & MODEL#	REMARKS
						HP	VOLT	PH	RPM		
DCP-1	PROCESS 19	110°F HWR	DOMESTIC WATER	3	38	1/3	120	1	1750	TACO #1615	PROVIDE LEAD-FREE BRONZE CONSTRUCTION; FURNISH WITH 120 VOLT AQUASTAT (INSTALLED BY PC/WIRED BY EC)
DCP-2	PROCESS 19	85°F HWR	DOMESTIC WATER	3	38	1/3	120	1	1750	TACO #1615	

EXPANSION TANK (BLADDER TYPE) SCHEDULE

TAG	LOCATION	SERVICE	TYPE	FLUID	ACCEPTANCE VOLUME (GAL)	SIZE VOLUME	FILL PRESS (PSIG)	RELIEF VALVE SETTING (PSIG)	MANUFACTURER & MODEL#	REMARKS
ET	PROCESS 19	DOMESTIC WATER	BLADDER	WATER	3.2	8.0	55	90	AMTROL #ST-20V-C	PROVIDE ASME RATED TANK

ELECTRIC WATER HEATER SCHEDULE

TAG	TYPE	SERVICE	GALLONS	KW	GPH	RISE	ELECTRICAL DATA		MANUFACTURER & MODEL#	REMARKS
							VOLT	PH		
WH-1	ELECTRIC	DOMESTIC WATER	80	8	36	90°F	480	3	A.O. SMITH #DEN-80	ASME TANK CONSTRUCTION; TWO (2) SIMULTANEOUS ELEMENTS
WH-2	ELECTRIC	DOMESTIC WATER	119	12	54	90°F	480	3	A.O. SMITH #DEN-120	

PRELIMINARY - NOT FOR CONSTRUCTION

NO.	BY	CHK	APP
A			

02/27/15 LEVEL 2 DESIGN DOCUMENTS
DATE REVISIONS AND RECORD OF ISSUE

PW: C:\Users\3983\Documents\27872-PLUMB13-CENTRAL (AGA)_3983_EMORALES.rvt
XREF1:
SAVED: 2/27/2015 4:39:14 PM
XREF2:
PLOTTED:
XREF3:
USER:
DWG VER: A
XREF4:

BLACK & VEATCH
Building a world of difference.
Black & Veatch Corporation
Kansas City, Missouri

BEDFORD REGIONAL WATER AUTHORITY
SMITH MOUNTAIN LAKE WTP &
LAKES TO FOREST WATER LINE EXTENSION

LEGEND, DETAILS AND SCHEDULES

DESIGNED: NS
DETAILED: EM
CHECKED: TW
APPROVED: Approver
DATE: 06-2014

0 1/2 1
IF THIS BAR DOES NOT MEASURE 1" THEN DRAWING IS NOT TO FULL SCALE

CHA PROJECT NO. 27872

P-001
SHEET
OF

D7900

Drawing Copyright © 2014

CHA
1901 Innovation Drive, Suite 2100
Blacksburg, VA 24060
Main: (518) 453-4500 www.chacompanies.com

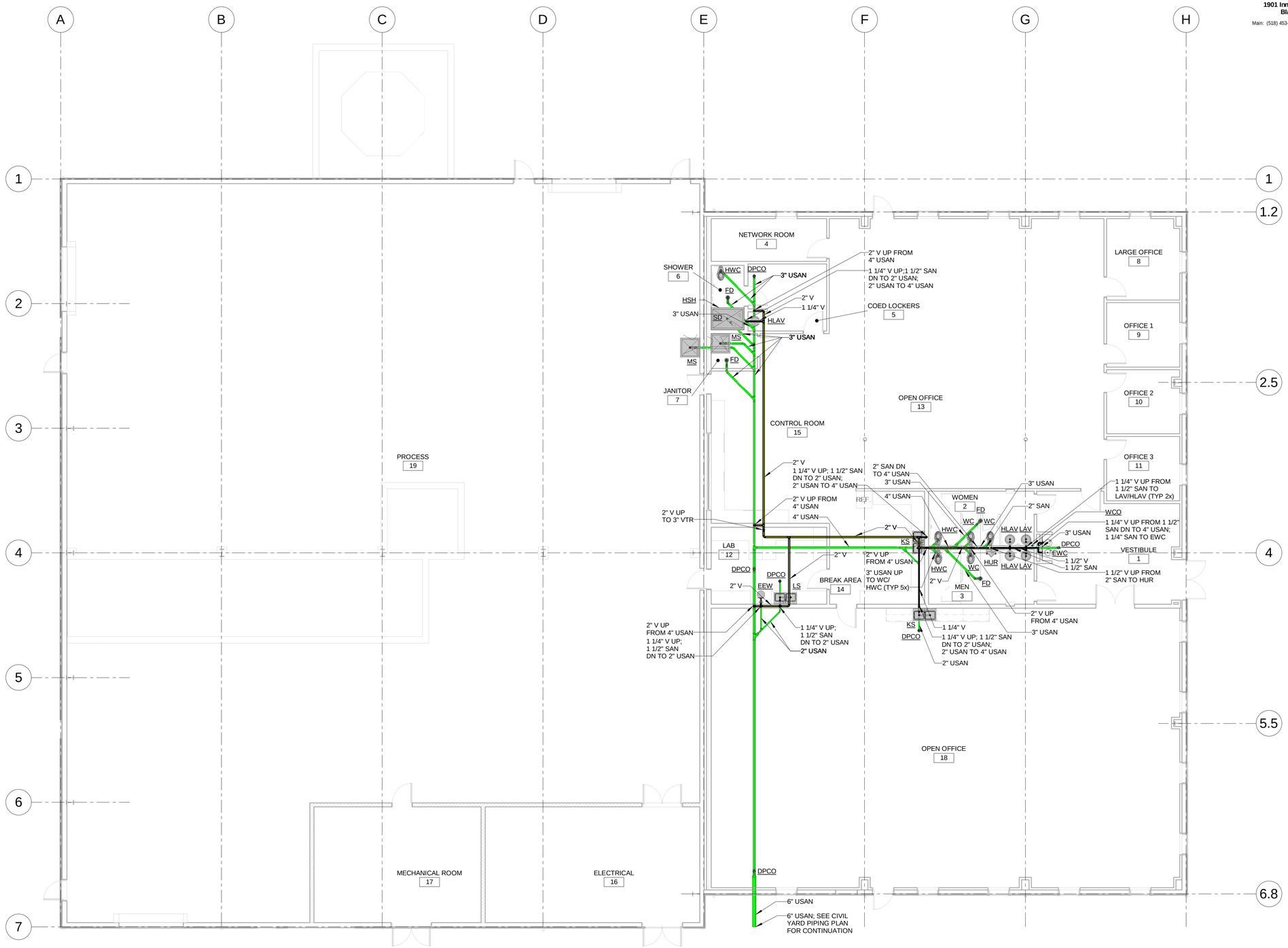

OPERATING FLOOR DRAINAGE & VENT PIPING PLAN
SCALE: 1/8" = 1'-0"

PRELIMINARY - NOT FOR CONSTRUCTION

DATE	REVISIONS AND RECORD OF ISSUE	NO.	BY	CHK	APP
02/27/15	LEVEL 2 DESIGN DOCUMENTS	A			

PW: C:\Users\3983\Documents\27872-PLUM613-CENTRAL (AGA)_3983_EMORALES.rvt
SW:
SAVED: 2/27/2015 4:39:28 PM
PLOTTED:
USER:
XREF1:
XREF2:
XREF3:
XREF4:
DWG VER: A

BLACK & VEATCH
Building a world of difference
Black & Veatch Corporation
Kansas City, Missouri

BEDFORD REGIONAL WATER AUTHORITY
SMITH MOUNTAIN LAKE WTP &
LAKES TO FOREST WATER LINE EXTENSION

ADMIN BUILDING - OPERATING FLOOR
DRAINAGE & VENT PIPING PLAN

DESIGNED: NS
DETAILED: EM
CHECKED: TW
APPROVED: Approver
DATE: 06-2014

0 1/2 1
IF THIS BAR DOES NOT MEASURE 1" THEN DRAWING IS NOT TO FULL SCALE

CHA PROJECT NO.
27872

P-101
SHEET
OF

D7000

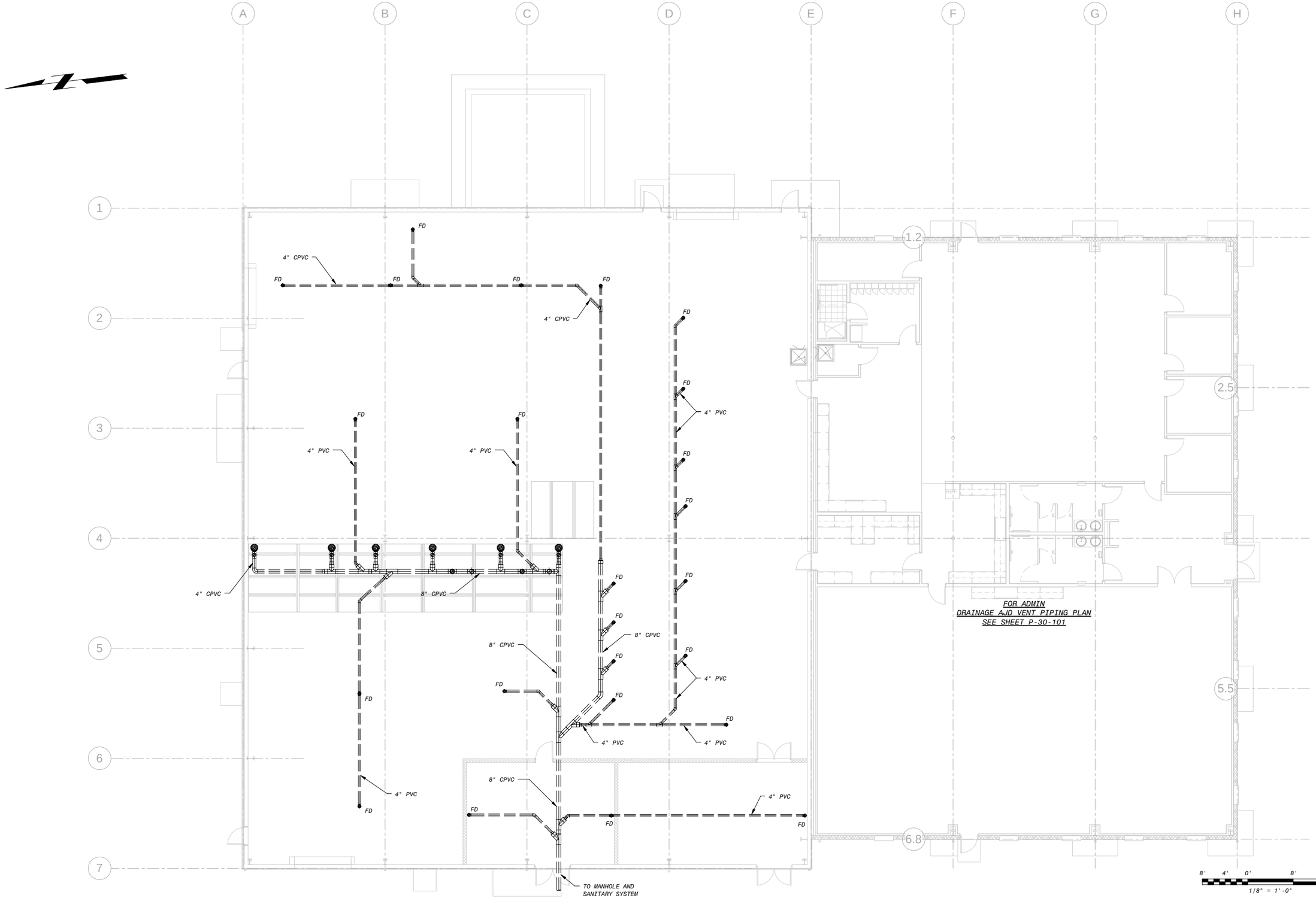

OPERATING FLOOR DRAINAGE AND VENT PIPING PLAN

1/8" = 1'-0"

PRELIMINARY - NOT FOR CONSTRUCTION

NO.	BY	CHK	APP
A			

DATE	REVISIONS AND RECORD OF ISSUE
02/20/15	GMP DRAWINGS

PW: R:\d1281932\3D-P-30-MEMBRANE-BV.rvt
SW:
SAVED: 3/5/2015 1:08:34 PM
PLOTTED:
USER:
XREF1:
XREF2:
XREF3:
XREF4:
DWG VER: A

BLACK & VEATCH
Building a world of difference.
Black & Veatch Corporation
Virginia Beach, VA

BEDFORD REGIONAL WATER AUTHORITY
SMITH MOUNTAIN LAKE WTP &
RAW WATER PUMPING STATION / INTAKE

PLUMBING
MEMBRANE BUILDING OPERATING FLOOR
DRAINAGE AND VENT PIPING PLAN

DESIGNED: ---
DETAILED: DAY
CHECKED: ---
APPROVED: ---
DATE: XX/XX/XXXX

0 1/2 1
IF THIS BAR DOES NOT MEASURE 1" THEN DRAWING IS NOT TO FULL SCALE

PROJECT NO.
182262

P-30-102
SHEET
- OF -

D7000

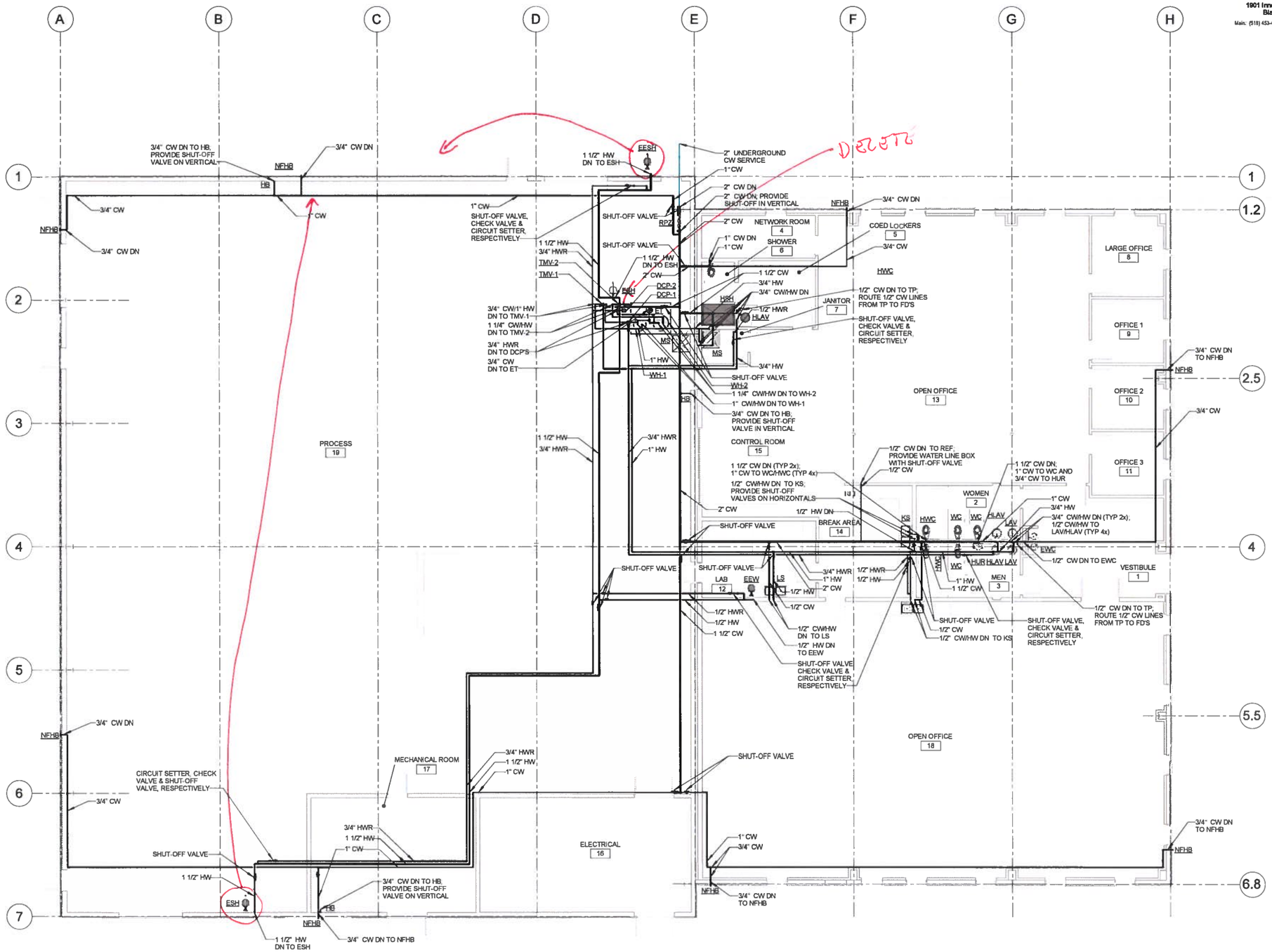

OPERATING FLOOR POTABLE PIPING PLAN
SCALE: 1/8" = 1'-0"

PRELIMINARY - NOT FOR CONSTRUCTION

Drawing Copyright © 2014

CHA
1901 Innovation Drive, Suite 2100
Blacksburg, VA 24060
Main: (518) 453-4500 www.chacompanies.com

NO.	BY	CHK	APP
A			

02/27/15 LEVEL 2 DESIGN DOCUMENTS
DATE REVISIONS AND RECORD OF ISSUE
PW: C:\Users\3983\Documents\27872-PLUMBIG-CENTRAL (ADA)_3983_EMORALES.rvt
SW:
SAVED: 2/27/2015 4:39:40 PM
PLOTTED:
USER:
DWG VER: A
XREF1:
XREF2:
XREF3:
XREF4:

BLACK & VEATCH
Building a world of difference
Black & Veatch Corporation
Kansas City, Missouri

BEDFORD REGIONAL WATER AUTHORITY
SMITH MOUNTAIN LAKE WTP &
LAKES TO FOREST WATER LINE EXTENSION

MEMBRANE/ADMIN BUILDING - OPERATING
FLOOR POTABLE PIPING PLAN

DESIGNED: NS
DETAILED: EM
CHECKED: TW
APPROVED: Approver
DATE: 06-2014

0 1/2 1
IF THIS BAR DOES NOT MEASURE 1" THEN DRAWING IS NOT TO FULL SCALE

CHA PROJECT NO.
27872

P-103
SHEET
OF

SYSTEM CODE - DENOTES ASSOCIATED SYSTEM STREAM
FUNCTION CODE - DENOTES ASSOCIATED EQUIPMENT ABBREVIATION
SEQUENCE CODE - UNIQUE ALPHA-NUMERIC IDENTIFIER

SSS - FFF - 999

EQUIPMENT IDENTIFICATION DESCRIPTION

PIPE SIZE - INCHES UNLESS OTHERWISE NOTED
SYSTEM CODE - DENOTES ASSOCIATED SYSTEM STREAM
MATERIAL CODE - DENOTES ASSOCIATED MATERIAL ABBREVIATION

SSS - FFF - 999

PIPELINE IDENTIFICATION DESCRIPTION

LINE SYMBOLS

- MAJOR PROCESS PIPING OR FLOW CHANNEL
- SECONDARY PROCESS PIPING
- MISCELLANEOUS PIPING
- SCREENED LINE DENOTES EXISTING PIPE OR EQUIPMENT
- DASHED LINE DENOTES FUTURE PIPE AND EQUIPMENT
- ELECTRIC SIGNAL
- HYDRAULIC SIGNAL
- PNEUMATIC SIGNAL
- SIGNAL CONNECTION POINT
- INTERNAL SYSTEM SIGNAL LINK (SOFTWARE OR DATA LINK)
- B PI-4 — SIGNAL LINE GOING TO ANOTHER SHEET
- B PI-4 — SIGNAL LINE FROM ANOTHER SHEET (MATCH LETTERS)
- FLOW ARROW FOR PROCESS PIPING
- B PI-45 — PROCESS LINE GOING TO ANOTHER SHEET; MATCH SHEET NO. IDENTIFIER; MATCH LINE NO.
- B PI-45 — PROCESS LINE COMING FROM ANOTHER SHEET
- PROCESS LINES CROSSING (NOT CONNECTED)

MECHANICAL EQUIPMENT SYMBOLS

- VAPORIZER: WATER BATH
- VAPORIZER: AMBIENT
- PARTICULATE FILTER
- AIR STRIPPER OR PACKED TOWER
- MIXER
- AIR FILTER
- WATER FILTER: CARTRIDGE TYPE
- WATER FILTER: MEMBRANE TYPE
- FLOCCULATION MIXER
- COMPRESSOR
- VALVE: MATERIAL HANDLING ROTARY
- AIR REGULATOR
- HEAT EXCHANGER: TYPE 1
- HEAT EXCHANGER: TYPE 2
- HEAT EXCHANGER: FINNED TUBE
- HEAT EXCHANGER: SHELL & TUBE
- HEAT EXCHANGER: PLATE & FRAME
- HEAT EXCHANGER: SPIRAL
- HEAT EXCHANGER: TUBE-IN-TUBE
- HEAT EXCHANGER: AIR
- BOILER
- PACKAGED AIR COMPRESSOR SYSTEM
- COOLING TOWER
- AFTERCOOLER
- STATIC MIXER
- WATER HEATER
- FILTER SEPARATOR
- SILENCER
- SWIVEL
- DAMPER
- DAMPER: PARALLEL BLADE
- DAMPER: OPPOSITE BLADE

PUMP & BLOWER SYMBOLS

- CENTRIFUGAL PUMP OR OTHER TYPE NOT SPECIFIED
- SUBMERGED CENTRIIFUGAL PUMP
- SCREW (LIFT) PUMP
- ROTARY PUMP
- PROGRESSING CAVITY PUMP
- POSITIVE DISPLACEMENT PUMP
- PLUNGER PUMP
- VERTICAL PUMP
- SUMP PUMP
- CENTRIFUGAL FAN
- METERING PUMP
- TURBINE COMPRESSOR
- STEAM COMPRESSOR
- GAS TURBINE ENGINE
- CENTRIFUGAL BLOWER
- POSITIVE DISPLACEMENT BLOWER
- COMPRESSOR: RECIPROCATING
- COMPRESSOR: ROTARY SCREW
- COMPRESSOR: LIQUID RING
- DIAPHRAGM METERING PUMP
- S — SOLENOID PUMP
- PERISTALTIC PUMP
- DRUM PUMP
- DOUBLE DIAPHRAGM
- T — TURBINE
- SUMP PUMP
- BELL MOUNTED PUMP

WATER PROCESS SYMBOLS

- GRAVITY FILTER
- RECTANGULAR SEDIMENTATION BASIN
- RECTANGULAR SEDIMENTATION BASIN W/SETTLING PLATES
- CIRCULAR SEDIMENTATION BASIN
- OZONE GENERATOR WITH POWER SUPPLY
- OZONE GENERATOR
- PRESSURE FILTER- VERTICAL
- PRESSURE FILTER- HORIZONTAL
- CONTINUOUS UPFLOW FILTER
- CONTINUOUS UPFLOW FILTER
- M — SCUM COLLECTOR
- DAF
- PACKAGED PLANT
- UV REACTOR
- RECTANGULAR BASIN
- SOLIDS COLLECTOR
- SOLIDS COLLECTOR W/SETTLING PLATES

PRIMARY ELEMENT & FITTING SYMBOLS

- DIAPHRAGM SEAL
- PRIMARY FLOW ELEMENT: ORIFICE PLATE
- PRIMARY FLOW ELEMENT: FLUME
- PRIMARY FLOW ELEMENT: TURBINE OR PROPELLER-TYPE
- PRIMARY FLOW ELEMENT: ELECTROMAGNETIC
- THERMAL DISPERSION TYPE FLOW ELEMENT
- PRIMARY FLOW ELEMENT: TRANSIT-TIME ULTRASONIC
- TE 101 — TEMPERATURE ELEMENT WITH THERMOWELL
- LE — ELECTRODE TYPE LEVEL SWITCH
- ANNULAR TYPE DIAPHRAGM SEAL
- PRIMARY FLOW ELEMENT: POSITIVE DISPLACEMENT
- PRIMARY FLOW ELEMENT: VENTURI TUBE
- PRIMARY FLOW ELEMENT: WEIR
- PRIMARY FLOW ELEMENT: PITOT TUBE
- PRIMARY FLOW ELEMENT: CORIOLIS
- PRIMARY FLOW ELEMENT: DOPPLER TYPE ULTRASONIC
- FE 100 — PRIMARY ELEMENT: ROTAMETER
- LE 100 — ULTRASONIC LEVEL ELEMENT
- REDUCER - CONCENTRIC
- REDUCER - ECCENTRIC
- FLANGE
- D — DRAIN - BELL-UP
- D — DRAIN - FUNNEL
- FLEXIBLE CONNECTION
- CAP
- PLUG
- T — TRAP
- FLAME CHECK
- SURGE CHAMBER
- LE 100 — GUIDED WAVE RADAR ELEMENT
- FLAME ARRESTER
- SEDIMENT TRAP
- UNION
- HOSE CONNECTION
- STRAINER - Y TYPE
- STRAINER - BASKET
- Q — QUICK CONNECT
- VENT
- VENT - SCREENED
- COUPLING
- SIGHTGLASS
- MOISTURE SEPARATOR

VALVE & GATE SYMBOLS

- GATE: SLUICE, SLIDE, OR WEIR
- VALVE: GATE OR OTHER IN-LINE TYPE NOT OTHERWISE IDENTIFIED
- VALVE: BALL
- VALVE: GLOBE
- VALVE: BUTTERFLY, DAMPER OR LOUVER
- VALVE: PLUG
- VALVE: THREE WAY
- VALVE: FOUR WAY
- VALVE: CHECK
- VALVE: ANGLE
- VALVE: SET STOP
- VALVE: PINCH
- VALVE: CHLORINE
- VALVE: CHLORINE WITH YOKE
- VALVE: DIAPHRAGM
- VALVE: NEEDLE
- VALVE: PRESSURE REDUCING
- VALVE: PRESSURE SUSTAINING
- VALVE: PRESSURE REDUCING (SELF ACTUATING TYPE)
- VALVE: PRESSURE SUSTAINING (SELF ACTUATING TYPE)
- VALVE: PILOT
- VALVE: VACUUM RELIEF
- VALVE: PRESSURE RELIEF
- VALVE: PRESSURE/VACUUM RELIEF
- VALVE: FOUR FUNCTION
- GATE: STOP PLATE
- AIR RELEASE OR AIR VACUUM/RELIEF VALVE
- VALVE: AIR-VACUUM
- VALVE: AIR RELEASE
- VALVE: THERMAL SHUTOFF
- VALVE: MUD
- VALVE: SLEEVE
- VALVE: KNIFE GATE
- M — CHLORINE VACUUM REGULATOR
- BACKFLOW PREVENTER
- GATE: FLAP
- VACUUM BREAKER
- EXPLOSION RELIEF

MATERIAL HANDLING EQUIPMENT SYMBOLS

- CYCLONE SEPARATER
- BIN: LIVE BOTTOM
- BIN: SLIDING FRAME
- SCREEN: SINGLE VIBRATORY
- SCREEN: DOUBLE VIBRATORY
- GRINDER
- PELLETIZER
- BIN - OPEN TOP
- BIN - CLOSED TOP
- CONVEYOR: SCREW
- CONVEYOR: BUCKET
- CONVEYOR: BELT
- CONVEYOR: VIBRATORY
- PISTON CAKE PUMP: SINGLE
- PISTON CAKE PUMP: DOUBLE
- MIXER: PUGMILL
- MIXER: BLENDER

CHEMICAL FEED EQUIPMENT SYMBOLS

- DIFFUSER: TANK
- DIFFUSER: CHANNEL
- INJECTOR
- RUPTURE DISK
- PULSATION DAMPNER
- CHEMICAL INDUCTION UNIT
- CHLORINE CYLINDER
- VAPOR SUPERHEATER
- PRESSURE BUILDING COIL
- CALIBRATION COLUMN
- EXPANSION TANK OR FUNNEL
- WEIGH SCALE
- DRIP LEG HEATER
- SCALE
- TOTE — TOTE
- AS — AUTOMATIC SWITCHOVER
- GAS FEEDER
- EVAPORATOR
- DRY CHEMICAL FEEDER
- TON CONTAINER
- POLYMER BLENDER FEEDER
- POLYMER BLENDER FEEDER
- PASTE TYPE LIME SLAKER
- POLYMER ACTIVATION CHAMBER — POLYMER ACTIVATION CHAMBER
- DIFFUSER
- POLYMER INJECTION RING
- ACTIVATION CHAMBER

VALVE AND GATE ACTUATOR SYMBOLS

- P — AIR CYLINDER
- P/O — AIR-OIL CYLINDER
- H — HYDRAULIC CYLINDER
- E/H — ELECTRO HYDRAULIC
- S — SOLENOID
- M — STANDARD ELECTRIC
- M P — PROGRAMMABLE ELECTRIC
- M N — NETWORKED ELECTRIC
- M SM — SMALL MOTOR ACTUATOR
- H CW — CHAINWHEEL
- H WN — WRENCHNUT
- H HW — HANDWHEEL
- H L — LEVER

THE FOLLOWING ADDITIONAL DESIGNATIONS MAY BE UTILIZED ADJACENT TO SOME VALVE OR GATE SYMBOLS.

NC NORMALLY CLOSED
NO NORMALLY OPEN
FC FAILS CLOSED
FO FAILS OPEN
FIP FAILS IN LAST POSITION
MOD MODULATING

GENERAL NOTES

1. IN GENERAL, THE P &ID SYMBOLS AND DEVICE IDENTIFICATIONS ARE BASED ON INSTRUMENT SOCIETY OF AMERICA, STANDARD PRACTICE ISA-S5.1 (1988). SOME MODIFICATIONS, ADDITIONS, AND ALTERATIONS HAVE BEEN MADE AS NEEDED TO ACCOMMODATE THE PROJECT REQUIREMENTS.
2. SOME CONTROL AND INTERLOCK REQUIREMENTS WHICH CAN BE MORE CLEARLY ILLUSTRATED ON SCHEMATIC DRAWINGS HAVE BEEN OMITTED FROM THE P & ID DRAWINGS.
3. THIS IS A GENERAL LEGEND SHEET. SOME SYMBOLS AND ABBREVIATIONS MAY NOT BE UTILIZED ON THIS SPECIFIC PROJECT.
4. PIPING AND EQUIPMENT LEGEND APPLIES TO P & ID SHEETS ONLY AND MAY DIFFER FROM LEGENDS FOR OTHER SHEETS.

PRELIMINARY - NOT FOR CONSTRUCTION

DATE	REVISIONS AND RECORD OF ISSUE	NO.	BY	CK	APP
50.3082 - WTP					
I-00-001.dwg					
SAVED: VAN16843, 12/18/2014 2:59:02 PM					
PLOTTED: 1/5/2015 1:38:48 PM					
USER: PWADMIN					

XREF1: BORDER.dwg
XREF2:
XREF3:
XREF4:
DWG VER: 1000

BLACK & VEATCH
Building a world of difference.
Black & Veatch Corporation
Virginia Beach, VA

BEDFORD REGIONAL WATER AUTHORITY
SMITH MOUNTAIN LAKE WTP &
RAW WATER PUMPING STATION / INTAKE

INSTRUMENTATION
LEGEND AND ABBREVIATIONS - SHEET 1 OF 3

DESIGNED:
DETAILED:
CHECKED:
APPROVED:
DATE: DECEMBER 2014

0 1/2 1
IF THIS BAR DOES NOT MEASURE 1" THEN DRAWING IS NOT TO FULL SCALE

PROJECT NO.
182262

I-00-001
SHEET
OF

FD7000_PW
D7000

INSTRUMENT TAG NUMBERS
MEANINGS OF IDENTIFICATION LETTERS

LETTER	FIRST LETTER		SUCCEEDING LETTERS		
	MEASURED OR INITIATING VARIABLE	MODIFIER	READOUT OR PASSIVE FUNCTION	OUTPUT FUNCTION	MODIFIER
A	ANALYSIS		ALARM		
B	BURNER, COMBUSTION		USER'S CHOICE	USER'S CHOICE	USER'S CHOICE
C	CONDUCTIVITY (ELECTRICAL)			CONTROL	CLOSED
D	DENSITY (MASS) OR SPECIFIC GRAVITY	DIFFERENTIAL			
E	VOLTAGE (EMF)		PRIMARY ELEMENT		
F	FLOW RATE	RATIO (FRACTION)			
G	USER'S CHOICE		GLASS		
H	HAND (MANUALLY INITIATED)				HIGH
I	CURRENT (ELECTRICAL)		INDICATE		
J	POWER	SCAN			
K	TIME OR TIME-SCHEDULE	TIME RATE OF CHANGE		CONTROL STATION	
L	LEVEL		LIGHT (PILOT)		LOW
M	MOISTURE OR HUMIDITY	MOMENTARY			MIDDLE OR INTER-MEDIATE
N	INTRUSION		USER'S CHOICE	USER'S CHOICE	USER'S CHOICE
O	USER'S CHOICE		ORIFICE (RESTRICTION)		OPEN
P	PRESSURE OR VACUUM		POINT (TEST CONNECTION)		
Q	QUANTITY	INTEGRATE OR TOTALIZE	INTEGRATE OR TOTALIZE		
R	RADIATION		RECORD OR PRINT		
S	SPEED OR FREQUENCY	SAFETY		SWITCH	
T	TEMPERATURE			TRANSMIT	
U	MULTIVARIABLE		MULTIFUNCTION	MULTIFUNCTION	MULTIFUNCTION
V	VIBRATION			VALVE, DAMPER, OR LOUVER	
W	WEIGHT OR FORCE		WELL		
X	UNCLASSIFIED		UNCLASSIFIED	UNCLASSIFIED	UNCLASSIFIED
Y	EVENT, STATE, OR PRESENCE			RELAY OR COMPUTE	
Z	POSITION, DIMENSION			DRIVE, ACTUATOR OR UNCLASSIFIED FINAL CONTROL ELEMENT	

GENERAL INSTRUMENT SYMBOLS

FIELD MOUNTED INSTRUMENT

INSTRUMENT MOUNTED ON FACE OF PANEL

INSTRUMENT MOUNTED BEHIND OR INSIDE OF PANEL

INSTRUMENT MOUNTED ON FACE OF LOCAL PANEL

INSTRUMENT MOUNTED BEHIND OR INSIDE OF LOCAL PANEL

SINGLE INSTRUMENT HOUSING CONTAINING TWO (OR MORE) INSTRUMENTATION FUNCTIONS

I — CONTROL INTERLOCK FUNCTION, SEE SCHEMATICS AND SYSTEM SPECIFICATIONS FOR SPECIFIC FUNCTION

TAG NUMBERS AND ADDITIONAL DESIGNATIONS

TRC 31-1

FIRST LETTER
SUCCEEDING LETTERS
NUMBER AFTER DASH (-1, -2, ETC) DENOTES MULTIPLE DEVICES USED IN IDENTICAL DUPLICATE SYSTEMS.
A LETTER AFTER THE LOOP NUMBER (31A, 31B, ETC) IS USED TO DISTINGUISH MULTIPLE SIMILAR DEVICES IN THE SAME INSTRUMENT LOOP.
LOOP DESIGNATION NUMBER

pH — SEE INSTRUMENT FUNCTIONAL DESIGNATIONS AND ABBREVIATIONS.

DIGITAL SYSTEMS INTERFACE SYMBOLS

NOTE: REFER TO DETAILED SYSTEM SPECIFICATIONS FOR FUNCTIONAL DESCRIPTION. ALSO SEE I/O SCHEDULES FOR COMPLETE INPUT AND OUTPUT LISTINGS.

COMPUTER, DISTRIBUTED CONTROL SYSTEM, OR DISPLAY FUNCTION BLOCK

LETTERS, TAG NUMBERS, ABBREVIATIONS AND OTHER ANNOTATIONS ARE SIMILAR TO THE GENERAL INSTRUMENT LEGEND

DIGITAL SYSTEM I/O INTERFACE DIRECTION OF ARROW DENOTES WHETHER INPUT OR OUTPUT

▽ DISCRETE I/O

▲ ANALOG I/O

GENERAL NOTES

1. IN GENERAL, THE P&ID SYMBOLS AND DEVICE IDENTIFICATIONS ARE BASED ON INSTRUMENT SOCIETY OF AMERICA, STANDARD PRACTICE ISA-S5.1 (1988). SOME MODIFICATIONS, ADDITIONS, AND ALTERATIONS HAVE BEEN MADE AS NEEDED TO ACCOMMODATE THE PROJECT REQUIREMENTS.

2. SOME CONTROL AND INTERLOCK REQUIREMENTS WHICH CAN BE MORE CLEARLY ILLUSTRATED ON SCHEMATIC DRAWINGS HAVE BEEN OMITTED FROM P&ID DRAWINGS.

3. THIS IS A GENERAL LEGEND SHEET. SOME SYMBOLS AND ABBREVIATIONS MAY NOT BE UTILIZED ON THIS SPECIFIC PROJECT.

4. PIPING AND EQUIPMENT LEGEND APPLIES TO P&ID SHEETS ONLY AND MAY DIFFER FROM LEGENDS FOR OTHER SHEETS.

PIPELINE MATERIAL CODE ABBREVIATIONS

PCCP	SECTION 02612, PRESTRESSED CONCRETE CYLINDER PIPE
CBWS	SECTION 02614, CONCRETE BAR-WRAPPED, STEEL CYLINDER PIPE
LHCPP	SECTION 02616, LOW HEAD CONCRETE PRESSURE PIPE
RCP	SECTION 02618, CONCRETE PIPE
PVC	SECTION 15061, POLYVINYL CHLORIDE PIPE
DIP	SECTION 15061, DUCTILE IRON PIPE
SP	SECTION 15062, STEEL PIPE
LWS-XX	SECTION 15063, LIGHT WALL STEEL PIPE
SS-XX1	SECTION 15064, STAINLESS STEEL PIPE, TUBING, AND ACCESSORIES
CSG-XX	SECTION 15065, MISCELLANEOUS STEEL PIPE, TUBING, AND ACCESSORIES
CS-XX	SECTION 15065, MISCELLANEOUS STEEL PIPE, TUBING, AND ACCESSORIES
FRPE-XX	SECTION 15066, FIBERGLASS REINFORCED PLASTIC PIPE (EXHAUST AIR SERVICE)
FRP-XX	SECTION 15067, MISCELLANEOUS PLASTIC PIPE, TUBING, AND ACCESSORIES
PVC-XX	SECTION 15067, MISCELLANEOUS PLASTIC PIPE, TUBING, AND ACCESSORIES
CPVC-XX	SECTION 15067, MISCELLANEOUS PLASTIC PIPE, TUBING, AND ACCESSORIES
PE-XX	SECTION 15067, MISCELLANEOUS PLASTIC PIPE, TUBING, AND ACCESSORIES
PP-XX	SECTION 15067, MISCELLANEOUS PLASTIC PIPE, TUBING, AND ACCESSORIES
PVDF-XX	SECTION 15067, MISCELLANEOUS PLASTIC PIPE, TUBING, AND ACCESSORIES
RPT-XX	SECTION 15067, MISCELLANEOUS PLASTIC PIPE, TUBING, AND ACCESSORIES
SS	SECTION 15068, AWWA STAINLESS STEEL PIPE
CI-XX	SECTION 15069, CAST IRON SOIL PIPE AND ACCESSORIES
CU-XX	SECTION 15070, COPPER TUBING AND ACCESSORIES
BR-XX	SECTION 15060, MISCELLANEOUS PIPING AND PIPE ASSEMBLY
HS-XX	SECTION 15060, MISCELLANEOUS PIPING AND PIPE ASSEMBLY
TG-XX	SECTION 15060, MISCELLANEOUS PIPING AND PIPE ASSEMBLY
CRP-XX	SECTION 15060, MISCELLANEOUS PIPING AND PIPE ASSEMBLY

1. XX= numbers 01-20

FUNCTION DESIGNATIONS AND ABBREVIATIONS

INSTRUMENT DESIGNATIONS

K	GAIN OR ATTENUATE (INPUT:OUTPUT)
-K	GAIN AND REVERSE
Σ	ADD OR SUM (ADD AND SUBTRACT)
Δ	SUBTRACT (DIFFERENCE)
√‾	EXTRACT SQUARE ROOT
÷	DIVIDE
F(X)	CHARACTERIZE SIGNAL
>	HIGH-SELECT
<	LOW-SELECT
×	MULTIPLY
∫	INTEGRATE (TIME INTEGRAL)
CH_4	METHANE
CL_2	CHLORINE RESIDUAL
CO_2	CARBON DIOXIDE
DO	DISSOLVED OXYGEN
LEL	LOWER EXPLOSIVE LIMIT
MCC	MOTOR CONTROL CENTER
MLSS	MIXED LIQUOR SUSPENDED SOLIDS
O_2	OXYGEN (PURITY)
pH	pH CELL
TURB	TURBIDITY
COMB	COMBUSTIBLE GAS
UVI	UV INTENSITY

HAND SWITCH DESIGNATIONS

HOA	HAND-OFF-AUTO
LR	LOCAL-REMOTE
OC	OPEN-CLOSE
OO	ON-OFF
LOR	LOCAL-OFF-REMOTE
MOC	MEMBRANE-OFF-CENTRIFUGE
OOA	ON-OFF-AUTO
OCR	OPEN-CLOSE-REMOTE
OOR	ON-OFF-REMOTE
FR	FORWARD-REVERSE
ESTOP	EMERGENCY STOP
ST	START
STP	STOP
HOR	HAND-OFF-REMOTE
OPN	OPEN
CLS	CLOSED
OR	OFF-REMOTE

TRANSDUCER & CONVERTER DESIGNATION

E	VOLTAGE
FSK	FREQUENCY SHIFT KEYING
H	HYDRAULIC
I	CURRENT
P	PNEUMATIC PULSE
PD	PULSE DURATION
PF	PULSE FREQUENCY
R	RESISTANCE (ELECTRICAL)

EXAMPLE: I/P = CURRENT TO PNEUMATIC TRANSDUCER

POWER SUPPLY ABBREVIATIONS

AS	AIR SUPPLY
ES	ELECTRIC SUPPLY
GS	GAS SUPPLY
HS	HYDRAULIC SUPPLY
NS	NITROGEN SUPPLY
SS	STEAM SUPPLY
WS	WATER SUPPLY

AS — POWER SUPPLY SOURCE LABEL. USED ONLY WHERE NECESSARY TO HELP CLARIFY AN INSTRUMENT OR SYSTEM FUNCTION.

PRELIMINARY - NOT FOR CONSTRUCTION

DATE	REVISIONS AND RECORD OF ISSUE	NO.	BY	CK	APP

50.3082 - WTP
I-00-002.dwg
SAVED: 8/05/2608, 12/30/2014 11:54:04 AM
PLOTTED: 3/5/2015 1:39:13 PM
USER: PWADMIN
XREF1: BORDER.dwg
XREF2:
XREF3:
XREF4:
DWG VER: 1000

BLACK & VEATCH
Building a world of difference.
Black & Veatch Corporation
Virginia Beach, VA

BEDFORD REGIONAL WATER AUTHORITY
SMITH MOUNTAIN LAKE WTP &
RAW WATER PUMPING STATION / INTAKE

INSTRUMENTATION
LEGEND AND ABBREVIATIONS - SHEET 2 OF 3

DESIGNED:
DETAILED:
CHECKED:
APPROVED:
DATE: DECEMBER 2014

0 1/2 1
IF THIS BAR DOES NOT MEASURE 1" THEN DRAWING IS NOT TO FULL SCALE

PROJECT NO.
182262

I-00-002
SHEET
OF

FD7000_PW
D7000

SYSTEM CODE ABBREVIATIONS

ACETIC ACID	ACE	FLOCCULATION	FLC	RESIDUALS	RES
ACETYLENE	ACT	GASEOUS OXYGEN	GOX	RETURN ACTIVATED SLUDGE	RAS
ACTIVATED CARBON - GRANULAR	GAC	GASOLINE	GSL	REVERSE OSMOSIS	ROS
AERATION AIR/PROCESS AIR	AIR	GREASE	GRS	SAMPLE	SAMP
AERATION SYSTEM	AER	GRIT	GRT	SCREENINGS	SCR
AIR WASH/BLOWERS	ARW	HELIUM	HEL	SCREEN, FINE	FSC
ALUMINUM SULFATE	ALS	HYDRAULIC FLUID	HFL	SECONDARY CLARIFICATION	SCL
AMMONIUM SULFATE	NSO4	HYDROCHLORIC ACID	HCL	SECONDARY SCUM	SSC
ANHYDROUS AMMONIA	NH3	HYDROFLUOSILIC ACID (FLUORIDE)	HFS	SEPTAGE	SEP
ANTI-SEALANT	AS	HYDROGEN	HYD	SETTLED WATER	SET
AQUA AMMONIA	NHOH	HYDROGEN PEROXIDE	PER	SEWAGE	SEW
ARGON	ARG	INCINERATION	INC	SODA ASH	NAC
ASH	ASH	INFLUENT PUMPING	INFP	SODIUM ACETATE	NAA
BACKWASH - MEMBRANE/FILTER	BWH	INTAKE	INT	SODIUM ALUMINATE	NAL
BALLASTED FLOCCULATION	BAL	LAGOON STORAGE	LAG		
BIOSOLIDS	BIO	LAND APPLICATION	LAP	SODIUM BICARBONATE	NBC
BIOTOWER	BIT	LIME - HYDRATED	CAH	SODIUM BISULFITE	NHS
BLENDED SLUDGE	BLS	LIME - QUICKLIME	CAO	SODIUM CHLORIDE	NCL
BNR	BNR	LIME STABILIZATION	LIM	SODIUM CHLORITE	NCL2
BRINE	BRN	LIQUID OXYGEN	LOX	SODIUM FLUORIDE	NAF
CALCIUM HYPOCHLORITE	CACL	LP GAS OR PROPANE GAS	LPG	SODIUM HEXAMETAPHOSPHATE	NAX
CALCIUM THIOSULFATE	CATS	MAGNESIUM HYDROXIDE	MGOH	SODIUM HYDROXIDE	NAOH
CARBON DIOXIDE	CO2	MEMBRANE	MEM	SODIUM HYPOCHLORITE	NOCL
CARBON SLURRY	CAS	MEMBRANE FEED	MF	SODIUM SILICOFLUORIDE	NASF
CARBONIC ACID	HCO3	MEMBRANE BIOREACTOR	MBR	STEAM	STM
CENTRATE	CEN	METHANE GAS	MEG	STORM SEWER	STS
CHEMICAL ENHANCED BACKWASH - MEMBRANE	CEB	METHANOL	MTH	STORM WATER	STW
CHLORINE	CL2	MIXED LIQUOR	MXL	SULFUR DIOXIDE	SO2
CHLORINE DIOXIDE	CLO2	NATURAL GAS	NG	SULFURIC ACID	HSO4
CITRIC ACID	CA	NITROGEN	NIT	SURFACE WASH	SW
CLEAN IN PLACE	CIP	NITROUS OXIDE	NIO	TERTIARY TREATMENT	TERT
COAGULATION	COA	ODOR CONTROL	ODC	THICKENED PRIMARY SLUDGE	TPRS
COMPRESSED AIR - INSTRUMENT	CAI	OIL	OIL	THICKENED WASTE ACTIVATED SLUDGE	TWAS
COMPRESSED AIR - SERVICE/VALVES	CMS	OIL - FUEL	FO	THICKENING	THCK
COPPER SULFATE	CUS	OZONE	OZN	TREATED WATER	TW
CORROSION INHIBITOR	CI	OZONE DESTRUCT	OZD	TRICKLING FILTER	TF
DECHLORINATION	DCL	PHOSPHATE	PPP	ULTRAVIOLET	UV
DETERGENT	DET	PHOSPHORIC ACID	PO4	VACUUM	VAC
DEWATERING	DWT	POLYALUMINUM CHLORIDE	PCL	WASH WATER	WW
DIESEL FUEL	FUE	POLYMER	POLF	WASTE ACTIVATED SLUDGE	WAS
DIGESTER GAS	DGG	POTASSIUM PERMANGANATE	KMN	WASTE WASH WATER	WWW
DIGESTER GAS MIXING	DGM	POWDERED ACTIVATED CARBON	PAC	WATER - CONDENSATE	CDW
DIGESTER SLUDGE	DGS	PRE-AERATION	PAR	WATER - COOLING	COLW
DIGESTION - AEROBIC	DGA	PRESEDIMENTATION	PSD	WATER - DISTILLED WATER	DW
DIGESTION - ANAEROBIC	DIG	PRIMARY CLARIFICATION	PRC	WATER - FILTERED	FILW
DISINFECTION CONTACT BASIN	DCB	PRIMARY SCUM	PSC	WATER - FINISHED	FW
DISSOLVED AIR FLOTATION	DAF	PRIMARY SLUDGE	PRS	WATER - IRRIGATION	IRW
DRAIN	DRN	RAW WASTEWATER PUMPING	WWP	WATER - OZONATED	OZW
EFFLUENT PUMPING	EFP	RAW WATER PUMPING	RWP	WATER - SEAL	SWT
ENGINE EXHAUST	EXH	RAW WATER STORAGE	RWS	WATER - WATER HEATING	HW
ENGINE GENERATOR	DF	RECIRCULATED SLUDGE	RCS	WATER DEIONIZED	DEIW
EQUALIZATION BASIN	EQB	RECLAIMED WATER	RCW	WATER NON-POTABLE	NPW
FERRIC CHLORIDE	FEC	RECORDER	REC	WATER PLANT EFFLUENT	PEW
FERRIC SULFATE	FES	REFRIGERANT	REF	WATER POTABLE	PW
FERROUS CHLORIDE	FRC			WATER RAW	RW
FERROUS SULFATE	FRS			WET WEATHER TREATMENT	WWT
FILTRATION	FLT			ZINC ORTHOPHOSPHATE	ZOP

FUNCTION CODE ABBREVIATIONS

ACTIVATION CHAMBER	AC	DIGESTER COVER, GAS HOLDER	DCG	MEMBRANE	MFM	SCRUBBER	SCU	VALVE, KNIFE GATE	VKG
ADJUSTABLE FREQUENCY DRIVE	AFD	DIGESTER COVER, MEMBRANE	DCM	MEMBRANE, MICROFILTRATION	MBMF	SCUM COLLECTOR	SMC	VALVE, MATERIAL HANDLING ROTARY	VMR
AERATOR, COARSE BUBBLE DIFFUSED	ACD	DIGESTER, AEROBIC	DGE	MEMBRANE, NANOFILTRATION	MBNF	SCUM WEIR - ROTATING	SCW	VALVE, MUD	VMD
AERATOR, FINE PORE DIFFUSED	AEFD	DIGESTER, ANAEROBIC PRIMARY	DGAP	MEMBRANE, REVERSE OSMOSIS	MBRO	SEPARATOR	SEP	VALVE, PJLOT	PTV
AERATOR, FLOATING SURFACE	AFS	DIGESTER, ANAEROBIC SECONDARY	DGAS	MEMBRANE, ULTRAFILTRATION	MBUF	SIGHT GLASS - TALL	SGT	VALVE, PINCH	VPN
AERATOR, SURFACE	AES	DISINFECTION UNIT, UV	DSUV	MIXER, CARBON	MXC	SIGHTGLASS	SG	VALVE, PISTON OPERATED	VPO
AFTERCOOLER	AFC	DISSOLVED AIR FLOTATION THICKENER	DAF	MIXER, FLOCCULATION	FLM	SILENCER	SIL	VALVE, PLUG	VPG
AIR DRYER	AD	DUST COLLECTOR	DUC	MIXER, IN-LINE	MXI	SLUDGE COLLECTOR, CIRCULAR	SLC	VALVE, PRESSURE REDUCING	VPR
AIR FILTER	AF	ELECTRICAL EQUIPMENT, GENERAL	EQPE	MIXER, PUGMILL	MXPG	SLUDGE COLLECTOR, FLOCCULATING-CLARIFYING	SFC	VALVE, PRESSURE REGULATING	VPC
AIR RECEIVER	AR	EMERGENCY EYE WASH	EEW	MIXER, RAPID	MXR	SLUDGE COLLECTOR, SECONDARY CLARIFIERS	SCS	VALVE, PRESSURE RELIEF	VSP
AIR SEPARATOR	AS	EMERGENCY SHOWER	ES	MIXER, STATIC	MXS	SLUDGE COLLECTOR, SOLIDS CONTACT	SSC	VALVE, PRESSURE/VACUUM RELIEF	VSPV
AIR STRIPPER	AST	EMERGENCY SHOWER & EYEWASH	ESE	MIXER, SUBMERSIBLE PROPELLER	MXP	SLUDGE COLLECTOR, STRAIGHT LINE	SLCS	VALVE, PROCESS	VP
BACKFLOW PREVENTER	BFP	ENGINE GENERATOR (BACKUP POWER)	EG	OVERFLOW ROOF DRAIN	ORD	SLUDGE GRINDER	SLG	VALVE, RESILIENT SEATED GATE	VGR
BASIN, AERATION	BSNA	EQUIPMENT, GENERAL OR UNSPECIFIED	EQPT	OZONE DESTRUCT UNIT	ODU	SLUDGE SCREEN-INLINE	SCRI	VALVE, SAFETY	VS
BASIN, ANOXIC	BSNX	EVAPORATOR	EV	OZONE GENERATOR	OGEN	SOLIDS BLENDER-INLINE	SBL	VALVE, SURGE ARRESTOR	VSA
BASIN, BNR	BNR	EXPANSION CHAMBER	EXC	PARTICLE COUNTER	PCN	STOP PLATE	STPL	VALVE, SLEEVE	VSLV
BASIN, CHLORINE CONTACT	BSNC	FAN SUPPLY OR EXHAUST	FAN	PELLETIZER	PLT	STRAINER	STR	VALVE, SOLENOID	VSL
BASIN, OZONE CONTACT	BSNO	FILTER SEPARATOR	FTSP	PIPE	PIPE	STRAINER - BASKET TYPE	STRB	VALVE, THERMAL SHUTOFF	VTS
BELT FILTER PRESS	BFPS	FILTER, CARTRIDGE TYPE	FLC	PLATE SETTLER	PSE	STRAINER - Y TYPE	STRY	VALVE, THREE WAY	VTW
BIN (STORAGE - ALL TYPES)	B	FILTER, UNDERDRAINS AND MEDIA	FLT	POLYMER RING	PIR	SURGE CHAMBER	SRCH	VALVE, VACUUM BREAKER	VVB
BIN ACTIVATOR	BA	FILTER. SURFACE WASH EQUIPMENT	FSW	POWER SUPPLY UNIT	PSU	TANK, ABOVE GROUND STORAGE	TSA	VALVE, VACUUM RELIEF	VSV
BLOWER, CENTRIFUGAL	BLC	FITTING, MISCELLANEOUS	FTTNG	PULSATION DAMPNER	PD	TANK, AMMONIA STORAGE	TCN	VALVE, V-PORT BALL	VBP
BLOWER, POSITIVE DISPLACEMENT	BL	FLAME ARRESTER	FAR	PUMP, AIR DIAPHRAGM	PAD	TANK, CRYOGENIC STORAGE	TCR	VAPORIZER	VAP
BOILER	BLR	FLAME CHECK	FC	PUMP, CENTRIFUGAL	PCL	TANK, DOUBLE WALL	DWT	WEIR, CIPOLETTI	WC
BUILDING SERVICES EQUIPMENT	EQPB	FLOCCULATOR, HORIZONTAL	FLCH	PUMP, DOUBLE DIAPHRAGM	PDD	TANK, ELEVATED STORAGE	TSE	WEIR, RECTANGULAR	WR
CALIBRATION COLUMN	CCLM	FLOCCULATOR, VERTICAL	FLCV	PUMP, DIAPHRAGM METERING	PDM	TANK, EXPANSION	TX	WEIR, V-NOTCH	WV
CENTRIFUGE	CFG	FLOOR DRAIN	FD	PUMP, HEATING WATER	PHW	TANK, FRP CHEMICAL STORAGE	TCF	WELL, HORIZONTAL COLLECTOR	WLHC
CHEMICAL FEEDER	CHF	FLOW SPLITTER	FS	PUMP, HORIZONTAL END SUCTION	PHE	TANK, GENERAL OR UNSPECIFIED	TNK	WELL, VERTICAL	WLV
CHLORINE GAS SCRUBBER	CGS	FLUME, PARSHALL	FE	PUMP, HORIZONTAL SPLIT CASE	PSC	TANK, PE CHEMICAL STORAGE	TCP		
CLARIFIER, PRIMARY	PCLR	FOAM SEPARATOR	FMSP	PUMP, PERISTALTIC	PPS	TANK, STEEL CHEMICAL STORAGE	TCS		
CLARIFIER, SECONDARY	SCLR	GAS CYLINDER	CYG	PUMP, PLUNGER	PPL	TANK, STEEL WATER STORAGE	TSW		
CLASSIFIER, GRIT	CGR	GAS FEEDER	GFD	PUMP, PROGRESSING CAVITY	PPC	TRAP, DRIP	TRP		
CLEARWELL	CW	GAS FLARE	GF	PUMP, SCREW ENCLOSED	PSEN	TRAP, SEDIMENT	TRPS		
COMPRESSOR	CMP	GAS WATER HEATER	GWH	PUMP, SCREW OPEN	PSO	TURBIDIMETER	TB		
COMPRESSOR, BASE MOUNTED	CMB	GATE, FLAP	GFL	PUMP, SUBMERSIBLE	PSM	UNINTERRUPTABLE POWER SUPPLY	UPS		
COMPRESSOR, ROTARY SCREW	CMR	GATE, SLIDE	GSD	PUMP, SUBMERSIBLE CHOPPER	PCH	VACUUM REGULATOR	VRG		
CONTAINER, PROCESS	CTR	GATE, SLUICE	GSC	PUMP, SUBMERSIBLE SUMP	PSS	VALVE, AIR RELEASE	VR		
CONVEYOR, BELT	COB	GATE, WEIR	G	PUMP, SUMP	PSP	VALVE, AIR-VACUUM	VRAV		
CONVEYOR, SCREW	COS	GRAVITY BELT THICKENER	GBT	PUMP, UNSPECIFIED TYPE	P	VALVE, ANGLE	VAG		
COVER, ALUMINUM DOME BASIN	CFA	GRAVITY THICKENER	GVT	PUMP, VERTICAL DIFFUSION VANE	PVD	VALVE, AWWA BALL	VBL		
COVER, FIXED DIGESTER	CFD	GRINDER	GRD	PUMP, VERTICAL END SUCTION	PVE	VALVE, AWWA BUTTERFLY	VBF		
COVER, FLOATING DIGESTER	CFL	GRIT BASIN, AERATED OR VORTEX TYPE	GRB	PUMP, VERTICAL WET PIT	PVW	VALVE, BALL MISCELLANEOUS	VBM		
CRANE	CR	GRIT EQUIPMENT, FORCED VORTEX	GRV	RESERVOIR	RSV	VALVE, CHECK	VCK		
CRANE, GANTRY	CRG	HEAT EXCHANGER	HEX	RESIDUAL COLLECTOR	RCO	VALVE, CONE	VCN		
CRANE, JIB	CRJ	HOIST, CHAIN	HSC	ROTAMETER	RM	VALVE, DIAPHRAGM OPERATED	VDG		
CRANE, PORTABLE GANTRY	CRP	HOIST, WIRE ROPE	HSE	RUPTURE DISK	RD	VALVE, DOUBLE DISC GATE	VGD		
CRANE, TRAVELLING BRIDGE	CRT	HYDRANT, FIRE	HYDF	SAMPLER	SAMP	VALVE, ECCENTRIC PLUG	VPL		
CYLINDER, CHLORINE	CYL	HYDRANT, WALL	HYDW	SCALE	SC	VALVE, EXPLOSION RELIEF	VER		
DEWATERING SCREW	DWS	HYDROCYCLONE	HYC	SCREEN, MECHANICALLY CLEANED BAR	SCRA	VALVE, GATE	VG		
DIAPHRAGM SEAL	DPS	INJECTOR, CHEMICAL	INJ	SCREEN, MECHANICALLY CLEANED DRUM	SCRD	VALVE, GENERAL OR UNSPECIFIED	V		
DIFFUSER	DIF	LIME SLAKER	LS	SCREEN, STEP	SCRS	VALVE, GLOBE	VGL		
DIFFUSER BANK	DFB			SCREEN, TRAVELLING WATER	SCT	VALVE, INDUSTRIAL BUTTERFLY	VBI		

PRELIMINARY - NOT FOR CONSTRUCTION

DATE	REVISIONS AND RECORD OF ISSUE	NO.	BY	CK	APP

50.3082 - WTP
I-00-003.dwg
SAVED: VANIEA3, 12/18/2014 3:02:42 PM
PLOTTED: 3/5/2015 1:39:39 PM
USER: PWADMIN
DWG VER: 1000
XREF1: BORDER.dwg
XREF2:
XREF3:
XREF4:

BLACK & VEATCH
Building a world of difference.

Black & Veatch Corporation
Virginia Beach, VA

BEDFORD REGIONAL WATER AUTHORITY
SMITH MOUNTAIN LAKE WTP &
RAW WATER PUMPING STATION / INTAKE

INSTRUMENTATION
LEGEND AND ABBREVIATIONS - SHEET 3 OF 3

DESIGNED:
DETAILED:
CHECKED:
APPROVED:
DATE: DECEMBER 2014

0 1/2 1
IF THIS BAR DOES NOT MEASURE 1" THEN DRAWING IS NOT TO FULL SCALE

PROJECT NO.
182262

I-00-003
SHEET
OF

FD7000_PW
D7000

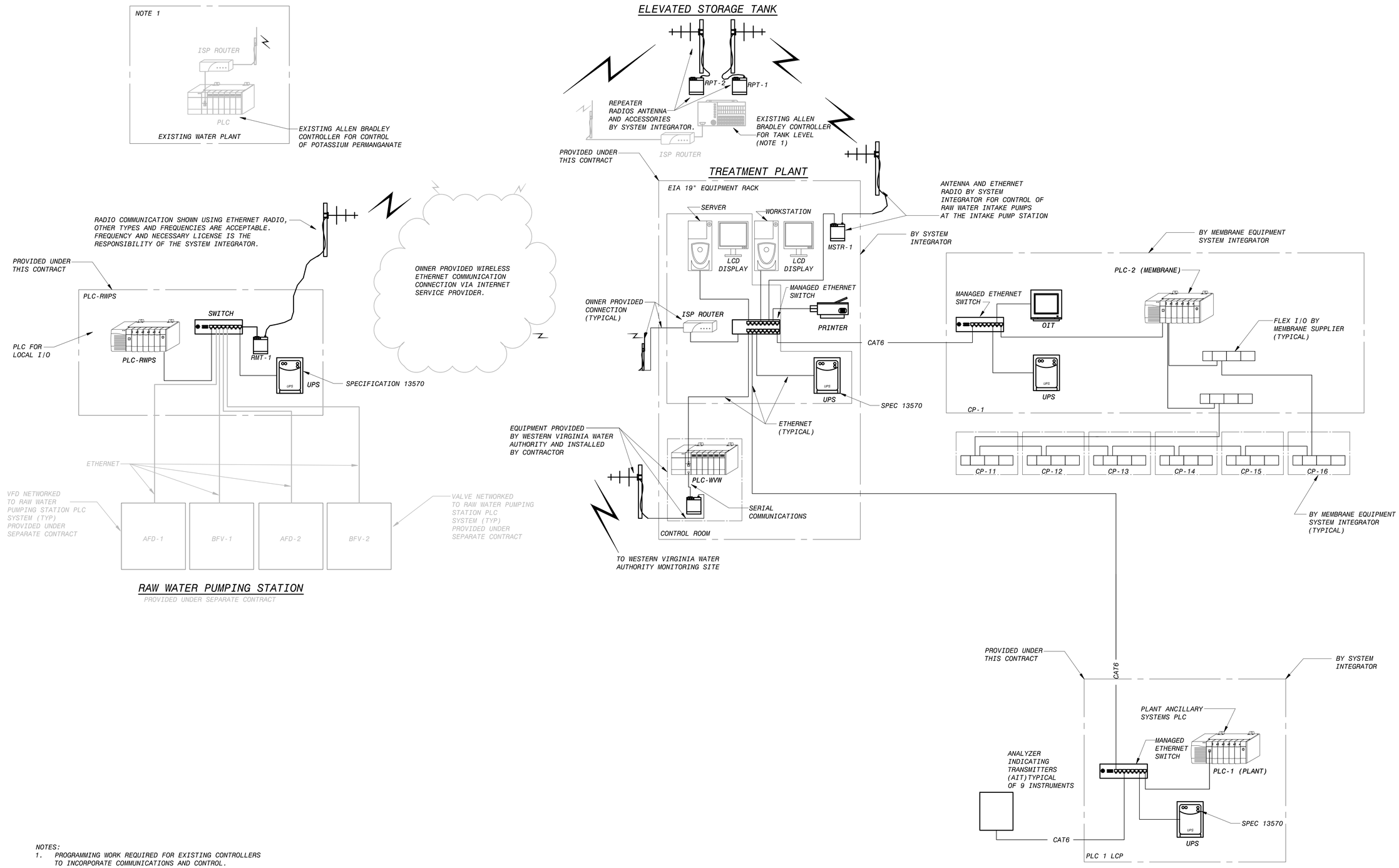

NOTES:
1. PROGRAMMING WORK REQUIRED FOR EXISTING CONTROLLERS TO INCORPORATE COMMUNICATIONS AND CONTROL.

PRELIMINARY - NOT FOR CONSTRUCTION

DATE	REVISIONS AND RECORD OF ISSUE	NO.	BY	CK	APP
50.3082 - WTP					

I-00-004.dwg
SAVED: BR052608, 2/20/2015 10:36:09 AM
PLOTTED: 3/5/2015 1:40:08 PM
USER: PWADMIN
DWG VER: 1001
XREF1: BORDER.dwg
XREF2:
XREF3:
XREF4:

BLACK & VEATCH
Building a world of difference.
Black & Veatch Corporation
Virginia Beach, VA

BEDFORD REGIONAL WATER AUTHORITY
SMITH MOUNTAIN LAKE WTP &
RAW WATER PUMPING STATION / INTAKE

INSTRUMENTATION
CONTROL BLOCK DIAGRAM

DESIGNED: LJB
DETAILED: LJB
CHECKED:
APPROVED:
DATE: DECEMBER 2014

0 1/2 1
IF THIS BAR DOES NOT MEASURE 1" THEN DRAWING IS NOT TO FULL SCALE

PROJECT NO.
182262

I-00-004
SHEET
OF

FD7000_PW
D7000

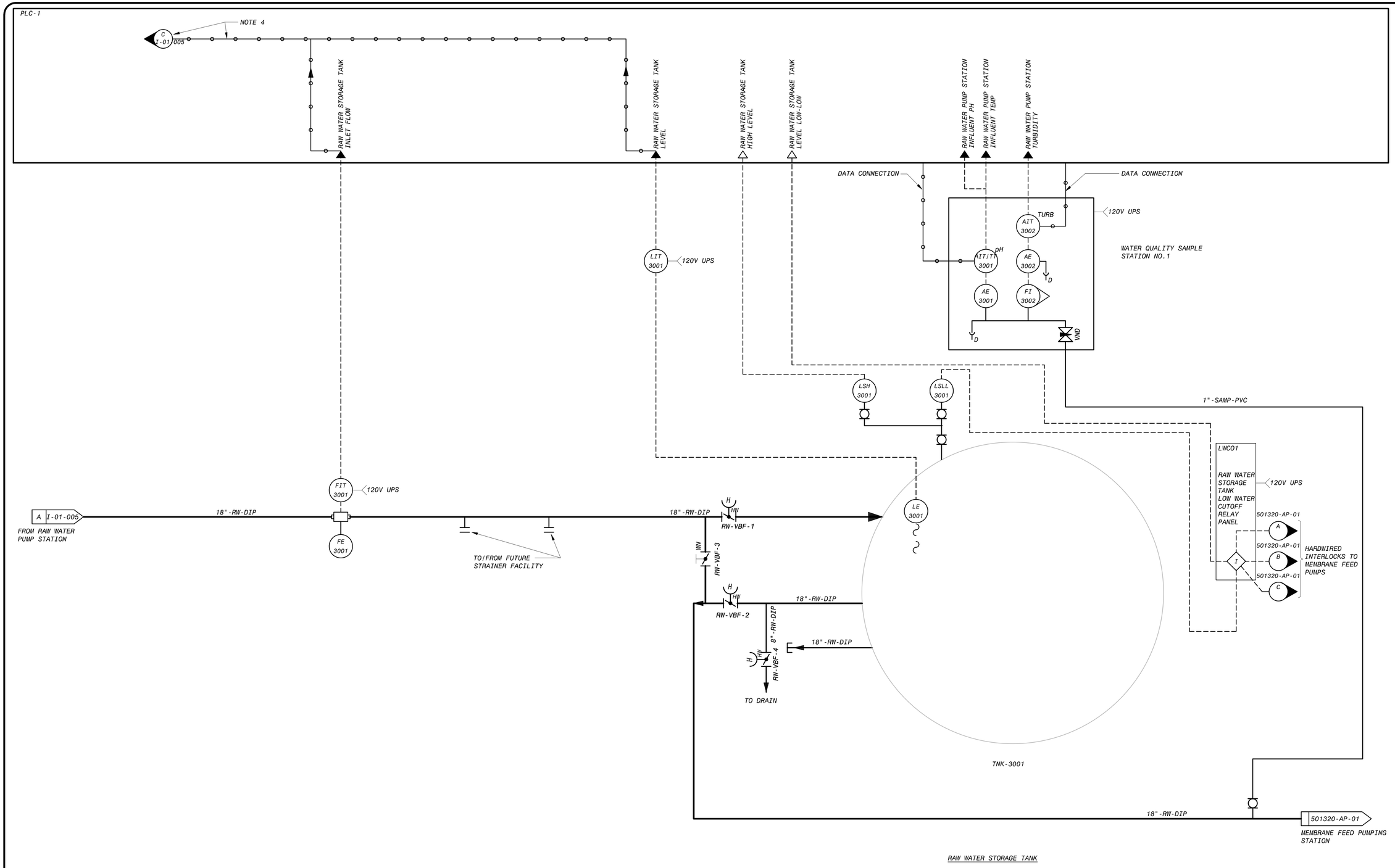

NOTES:

1. SEE LEGEND ON DRAWINGS I-00-001, I-00-002 AND I-00-003.
2. SYSTEM CODE IS RW UNLESS OTHERWISE NOTED.
3. LOCAL CONTROL DEVICES SUCH AS INDICATING LIGHTS AND SWITCHES, LOCATED ON MCCs OR AT EQUIPMENT, MAY NOT BE INDICATED ON THIS P&ID.
4. RAW WATER PUMP SPEED PACED BY RAW WATER PUMP STATION PLC BASED UPON COMMUNICATED RAW WATER STORAGE TANK INLET FLOW AND LEVEL FROM PLANT PLC. SEE SPECIFICATION 13550.

PRELIMINARY - NOT FOR CONSTRUCTION

NO.	BY	CK	APP	DATE	REVISIONS AND RECORD OF ISSUE

50.3082 - WTP

I-00-005.dwg

SAVED: BROS2608, 3/4/2015 1:23:45 PM
PLOTTED: 3/5/2015 1:40:35 PM
USER: PWADMIN

XREF1:
XREF2:
XREF3:
XREF4:
DWG VER: 1000

BLACK & VEATCH
Building a world of difference.
Black & Veatch Corporation
Virginia Beach, VA

BEDFORD REGIONAL WATER AUTHORITY
SMITH MOUNTAIN LAKE WTP &
RAW WATER PUMPING STATION / INTAKE

INSTRUMENTATION - P&ID
RAW WATER STORAGE TANK

DESIGNED:
DETAILED:
CHECKED:
APPROVED:
DATE: DECEMBER 2014

0 1/2 1
IF THIS BAR DOES NOT MEASURE 1" THEN DRAWING IS NOT TO FULL SCALE

PROJECT NO.
182262

I-00-005
SHEET
OF

F07000
D7000

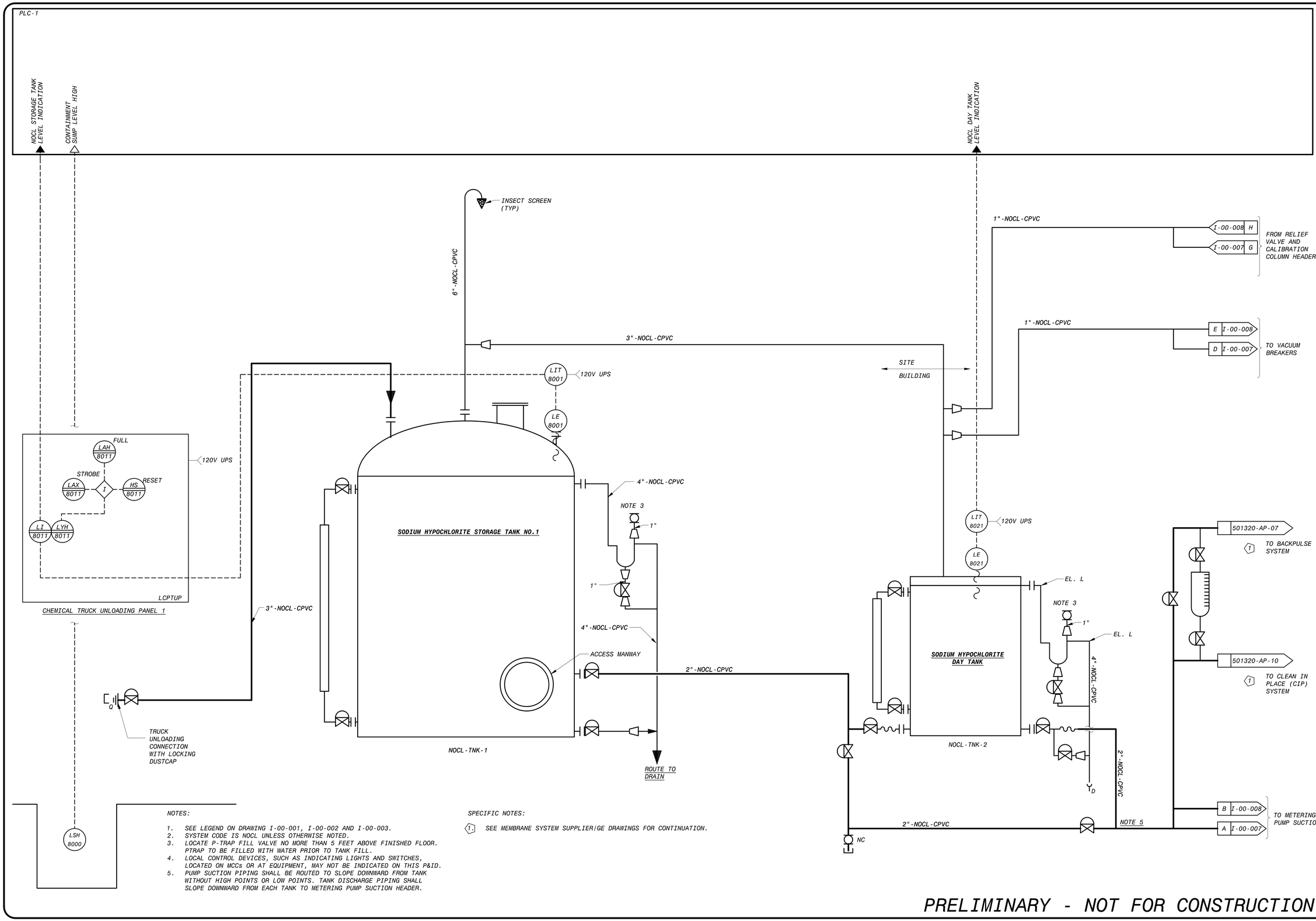

NOTES:

1. SEE LEGEND ON DRAWING I-00-001, I-00-002 AND I-00-003.
2. SYSTEM CODE IS NOCL UNLESS OTHERWISE NOTED.
3. LOCATE P-TRAP FILL VALVE NO MORE THAN 5 FEET ABOVE FINISHED FLOOR. PTRAP TO BE FILLED WITH WATER PRIOR TO TANK FILL.
4. LOCAL CONTROL DEVICES, SUCH AS INDICATING LIGHTS AND SWITCHES, LOCATED ON MCCs OR AT EQUIPMENT, MAY NOT BE INDICATED ON THIS P&ID.
5. PUMP SUCTION PIPING SHALL BE ROUTED TO SLOPE DOWNWARD FROM TANK WITHOUT HIGH POINTS OR LOW POINTS. TANK DISCHARGE PIPING SHALL SLOPE DOWNWARD FROM EACH TANK TO METERING PUMP SUCTION HEADER.

SPECIFIC NOTES:

1. SEE MEMBRANE SYSTEM SUPPLIER/GE DRAWINGS FOR CONTINUATION.

PRELIMINARY - NOT FOR CONSTRUCTION

NO.	BY	CK	APP

REVISIONS AND RECORD OF ISSUE

DATE
50.3082 - WTP
I-00-006.dwg
SAVED: BR052608, 3/4/2015 1:40:01 PM
PLOTTED: 3/5/2015 1:41:07 PM
USER: PWADMIN
DWG VER: 1001
XREF1: BORDER.dwg
XREF2:
XREF3:
XREF4:

BLACK & VEATCH
Building a world of difference.
Black & Veatch Corporation
Virginia Beach, VA

BEDFORD REGIONAL WATER AUTHORITY
SMITH MOUNTAIN LAKE WTP &
RAW WATER PUMPING STATION / INTAKE

INSTRUMENTATION - P&ID
SODIUM HYPOCHLORITE SYSTEM STORAGE TANKS

DESIGNED:
DETAILED:
CHECKED:
APPROVED:
DATE: DECEMBER 2014

0 1/2 1
IF THIS BAR DOES NOT MEASURE 1" THEN DRAWING IS NOT TO FULL SCALE

PROJECT NO.
182262

I-00-006
SHEET
OF

FD7000_PW
D7000

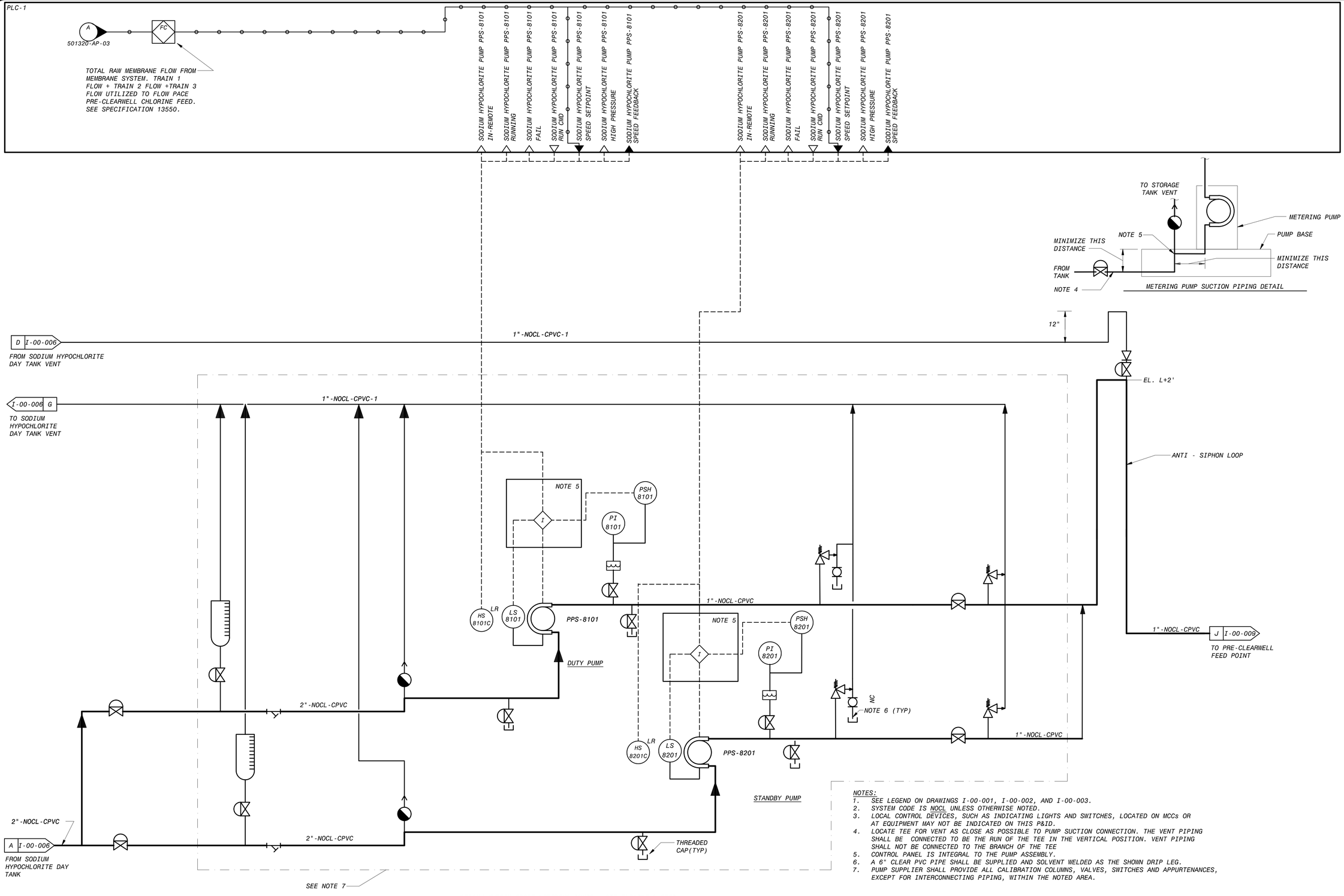

SODIUM HYPOCHLORITE METERING PUMPS - PRE-CLEARWELL FEED

NOTES:
1. SEE LEGEND ON DRAWINGS I-00-001, I-00-002, AND I-00-003.
2. SYSTEM CODE IS NOCL UNLESS OTHERWISE NOTED.
3. LOCAL CONTROL DEVICES, SUCH AS INDICATING LIGHTS AND SWITCHES, LOCATED ON MCCs OR AT EQUIPMENT MAY NOT BE INDICATED ON THIS P&ID.
4. LOCATE TEE FOR VENT AS CLOSE AS POSSIBLE TO PUMP SUCTION CONNECTION. THE VENT PIPING SHALL BE CONNECTED TO BE THE RUN OF THE TEE IN THE VERTICAL POSITION. VENT PIPING SHALL NOT BE CONNECTED TO THE BRANCH OF THE TEE
5. CONTROL PANEL IS INTEGRAL TO THE PUMP ASSEMBLY.
6. A 6" CLEAR PVC PIPE SHALL BE SUPPLIED AND SOLVENT WELDED AS THE SHOWN DRIP LEG.
7. PUMP SUPPLIER SHALL PROVIDE ALL CALIBRATION COLUMNS, VALVES, SWITCHES AND APPURTENANCES, EXCEPT FOR INTERCONNECTING PIPING, WITHIN THE NOTED AREA.

PRELIMINARY - NOT FOR CONSTRUCTION

DATE	REVISIONS AND RECORD OF ISSUE	NO.	BY	CK	APP
50.3082 - WTP					
I-00-007.dwg	XREF1:BORDER.dwg				
SAVED:BR052608, 3/4/2015 1:52:35 PM	XREF2:				
PLOTTED:3/5/2015 1:41:36 PM	XREF3:				
USER:PWADMIN	DWG VER:B-REV	XREF4:			

BLACK & VEATCH
Building a world of difference.
Black & Veatch Corporation
Virginia Beach, VA

BEDFORD REGIONAL WATER AUTHORITY
SMITH MOUNTAIN LAKE WTP &
RAW WATER PUMPING STATION / INTAKE

INSTRUMENTATION - P&ID
SODIUM HYPOCHLORITE SYSTEM
PRE-CLEARWELL FEED

DESIGNED:
DETAILED:
CHECKED:
APPROVED:
DATE: DECEMBER 2014

0 1/2 1
IF THIS BAR DOES NOT MEASURE 1" THEN DRAWING IS NOT TO FULL SCALE

PROJECT NO.
182262

I-00-007
SHEET
OF

FD7000_PW
D7000

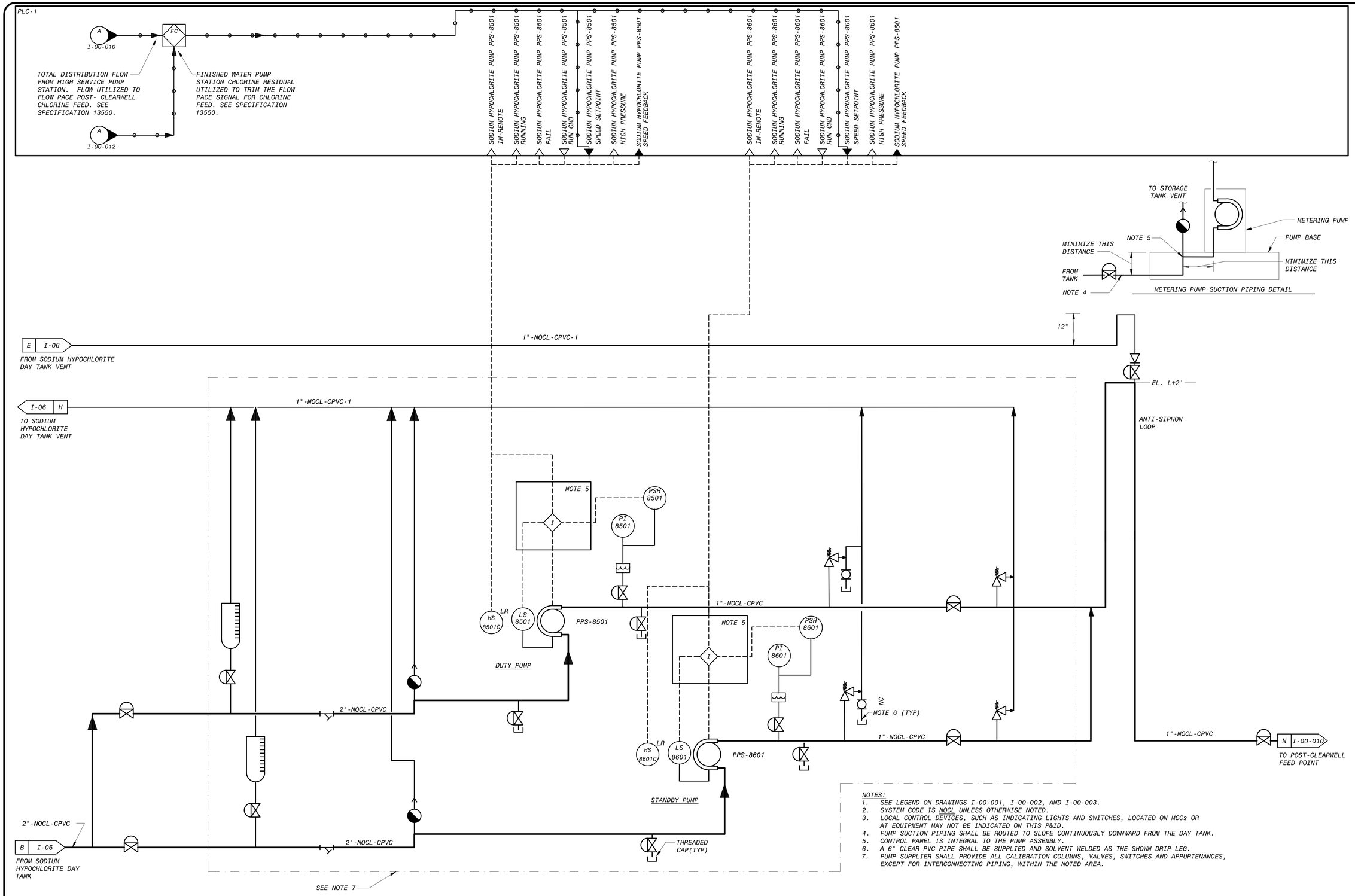

NOTES:
1. SEE LEGEND ON DRAWINGS I-00-001, I-00-002, AND I-00-003.
2. SYSTEM CODE IS NOCL UNLESS OTHERWISE NOTED.
3. LOCAL CONTROL DEVICES, SUCH AS INDICATING LIGHTS AND SWITCHES, LOCATED ON MCCs OR AT EQUIPMENT MAY NOT BE INDICATED ON THIS P&ID.
4. PUMP SUCTION PIPING SHALL BE ROUTED TO SLOPE CONTINUOUSLY DOWNWARD FROM THE DAY TANK.
5. CONTROL PANEL IS INTEGRAL TO THE PUMP ASSEMBLY.
6. A 6" CLEAR PVC PIPE SHALL BE SUPPLIED AND SOLVENT WELDED AS THE SHOWN DRIP LEG.
7. PUMP SUPPLIER SHALL PROVIDE ALL CALIBRATION COLUMNS, VALVES, SWITCHES AND APPURTENANCES, EXCEPT FOR INTERCONNECTING PIPING, WITHIN THE NOTED AREA.

SODIUM HYPOCHLORITE METERING PUMPS - POST CLEARWELL FEED

PRELIMINARY - NOT FOR CONSTRUCTION

DATE	REVISIONS AND RECORD OF ISSUE	NO.	BY	CK	APP
50.3082 - WTP					

I-00-008.dwg
SAVED: BRO52608, 3/4/2015 1:55:05 PM
PLOTTED: 3/5/2015 1:42:05 PM
USER: PWADMIN
DWG VER: B-REV
XREF1: BORDER.dwg
XREF2:
XREF3:
XREF4:

BLACK & VEATCH
Building a world of difference.
Black & Veatch Corporation
Virginia Beach, VA

BEDFORD REGIONAL WATER AUTHORITY
SMITH MOUNTAIN LAKE WTP &
RAW WATER PUMPING STATION / INTAKE

INSTRUMENTATION - P&ID
SODIUM HYPOCHLORITE SYSTEM
POST-CLEARWELL FEED

DESIGNED:
DETAILED:
CHECKED:
APPROVED:
DATE: DECEMBER 2014

0 1/2 1
IF THIS BAR DOES NOT MEASURE 1" THEN DRAWING IS NOT TO FULL SCALE

PROJECT NO.
182262

I-00-008
SHEET
OF

FD7000_PW
D7000

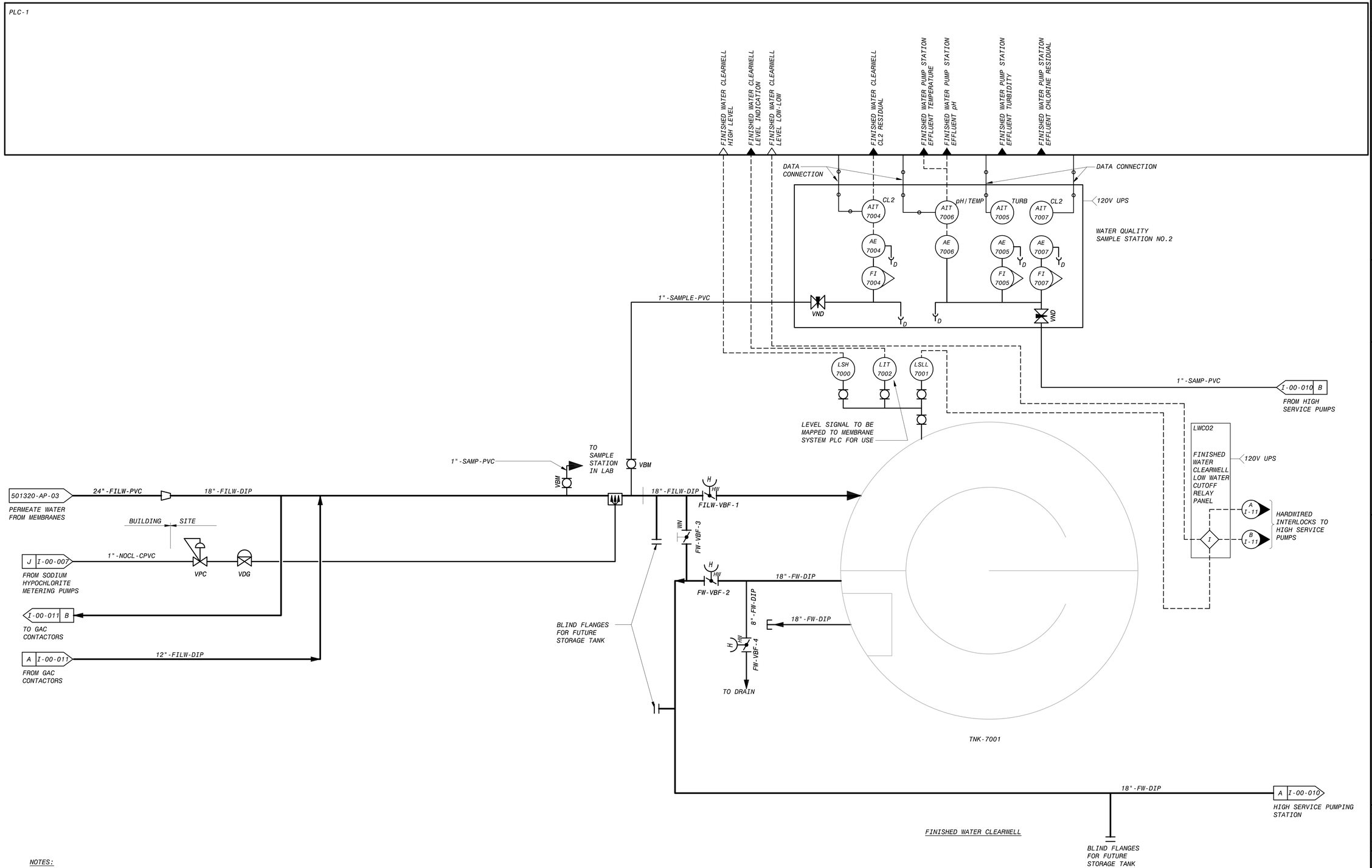

NOTES:

1. SEE LEGEND ON DRAWINGS I-00-001, I-00-002 AND I-00-003.
2. SYSTEM CODE IS FW UNLESS OTHERWISE NOTED.
3. LOCAL CONTROL DEVICES SUCH AS INDICATING LIGHTS AND SWITCHES, LOCATED ON MCCs OR AT EQUIPMENT, MAY NOT BE INDICATED ON THIS P&ID.

PRELIMINARY - NOT FOR CONSTRUCTION

DATE	REVISIONS AND RECORD OF ISSUE	NO.	BY	CK	APP

50.3082 - WTP
I-00-009.dwg
SAVED: BROSSGOR, 3/5/2015 2:23:07 PM
PLOTTED: 3/5/2015 1:42:36 PM
USER: PWADMIN
XREF1: BORDER.dwg
XREF2:
XREF3:
XREF4:
DWG VER: B-REV

BLACK & VEATCH
Building a world of difference.
Black & Veatch Corporation
Virginia Beach, VA

BEDFORD REGIONAL WATER AUTHORITY
SMITH MOUNTAIN LAKE WTP &
RAW WATER PUMPING STATION / INTAKE

INSTRUMENTATION - P&ID
FINISHED WATER CLEARWELL

DESIGNED:
DETAILED: TRK
CHECKED:
APPROVED:
DATE: DECEMBER 2014

0 1/2 1
IF THIS BAR DOES NOT MEASURE 1" THEN DRAWING IS NOT TO FULL SCALE

PROJECT NO.
182262

I-00-009
SHEET
OF

FD7000_PW
D7000

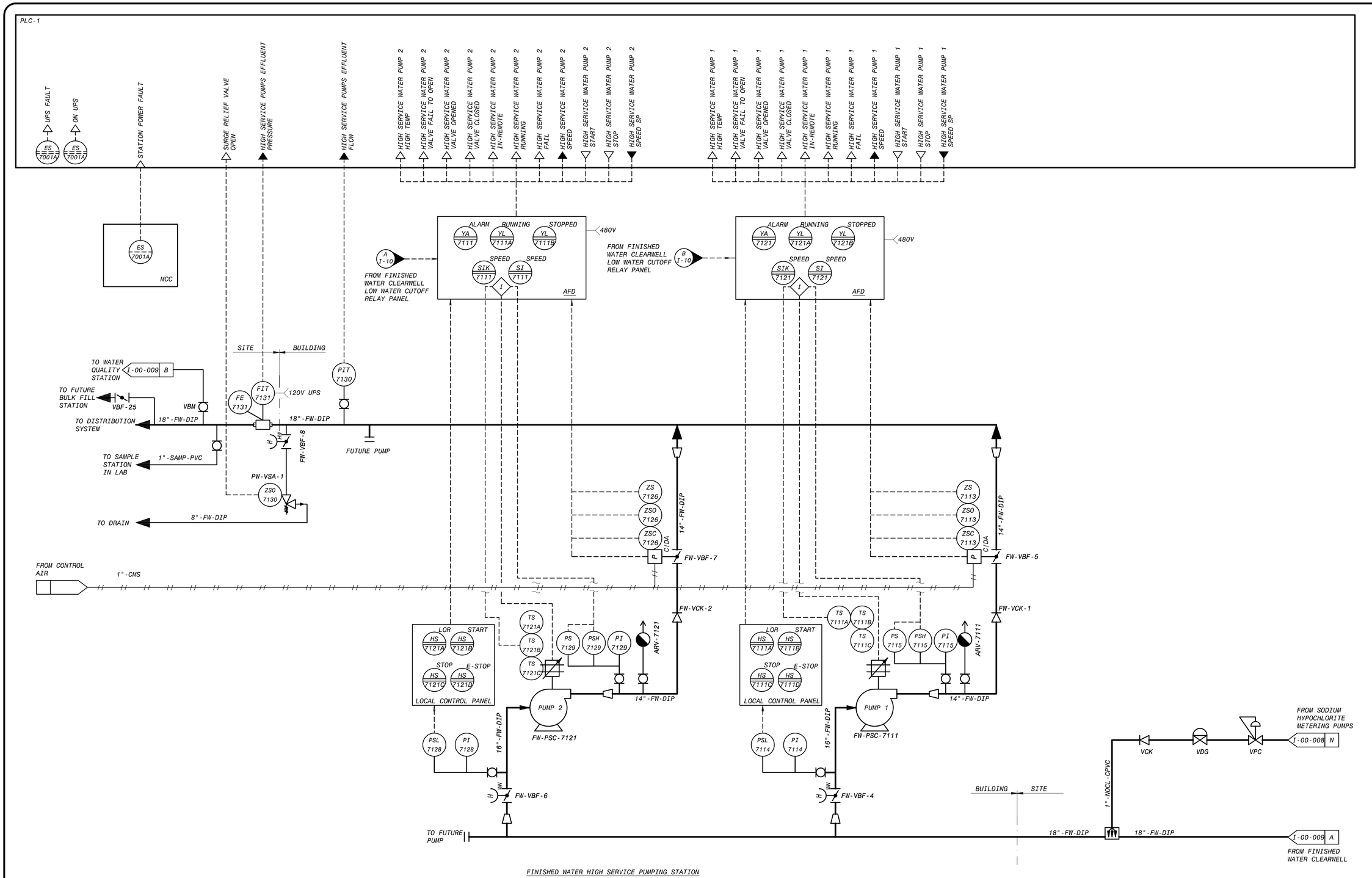

NOTES:

1. SEE LEGEND ON DRAWINGS I-00-001, I-00-002 AND I-00-003.
2. SYSTEM CODE IS FW UNLESS OTHERWISE NOTED.
3. LOCAL CONTROL DEVICES SUCH AS INDICATING LIGHTS AND SWITCHES, LOCATED ON MCCs OR AT EQUIPMENT, MAY NOT BE INDICATED ON THIS P&ID.

PRELIMINARY - NOT FOR CONSTRUCTION

DATE	REVISIONS AND RECORD OF ISSUE	NO.	BY	CK	APP
50.3082 - WTP					
I-00-010.dwg					
SAVED: BRO52608, 3/4/2015 2:01:08 PM					
PLOTTED: 3/5/2015 1:43:09 PM					
USER: PWADMIN	DWG VER: B-REV				

XREF1: BORDER.dwg
XREF2:
XREF3:
XREF4:

BLACK & VEATCH
Building a world of difference.
Black & Veatch Corporation
Virginia Beach, VA

BEDFORD REGIONAL WATER AUTHORITY
SMITH MOUNTAIN LAKE WTP &
RAW WATER PUMPING STATION / INTAKE

INSTRUMENTATION - P&ID
HIGH SERVICE PUMP STATION

DESIGNED:
DETAILED: TRK
CHECKED:
APPROVED:
DATE: DECEMBER 2014

0 1/2 1
IF THIS BAR DOES NOT MEASURE 1" THEN DRAWING IS NOT TO FULL SCALE

PROJECT NO.
182262

I-00-010
SHEET
OF

FD7000_PW
D7000

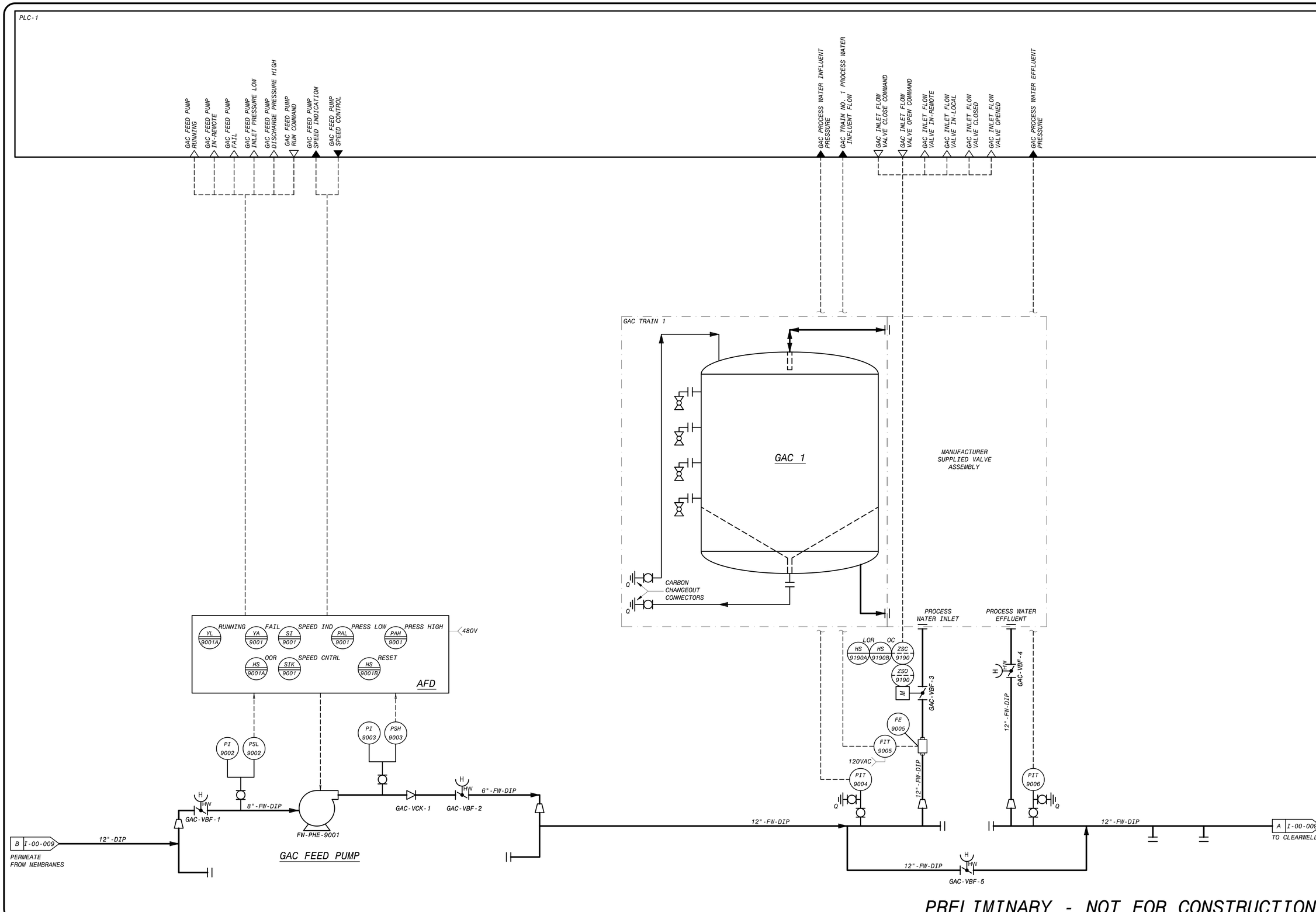

PRELIMINARY - NOT FOR CONSTRUCTION

DATE	REVISIONS AND RECORD OF ISSUE	NO.	BY	CK	APP

50.3082 - WTP
I-00-011.dwg
SAVED: 8/05/2608, 3/4/2015 2:02:30 PM
PLOTTED: 3/5/2015 1:43:40 PM
USER: PWADMIN
XREF1: BORDER.dwg
XREF2:
XREF3:
XREF4:
DWG VER: 1001

BLACK & VEATCH
Building a world of difference.
Black & Veatch Corporation
Virginia Beach, VA

BEDFORD REGIONAL WATER AUTHORITY
SMITH MOUNTAIN LAKE WTP &
RAW WATER PUMPING STATION / INTAKE

INSTRUMENTATION - P&ID
GAC CONTACTOR

DESIGNED:
DETAILED: TRK
CHECKED:
APPROVED:
DATE: DECEMBER 2014

0 1/2 1
IF THIS BAR DOES NOT MEASURE 1" THEN DRAWING IS NOT TO FULL SCALE

PROJECT NO.
182262

I-00-011
SHEET
OF

FD7000_PW
D7000

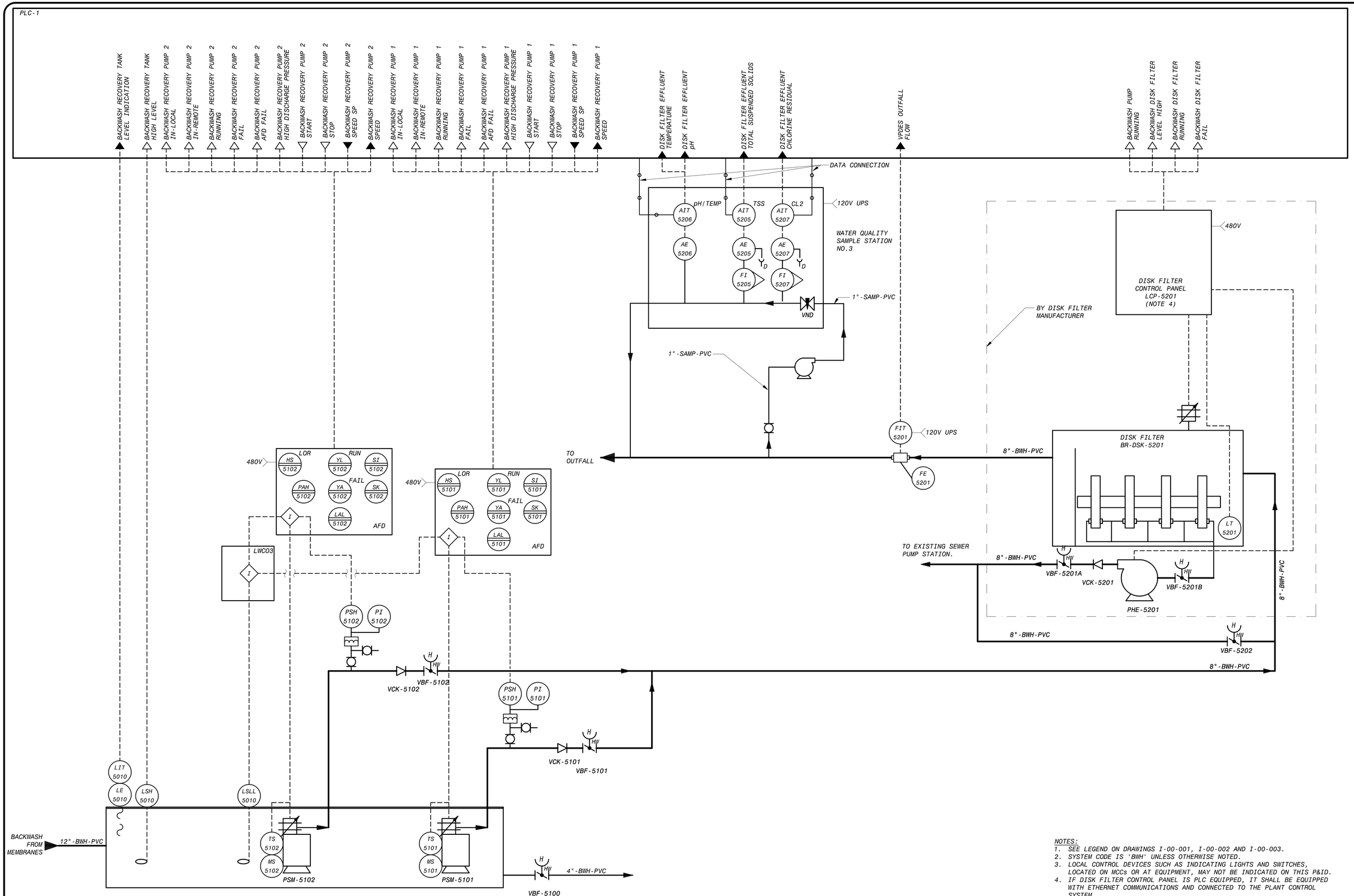

NOTES:
1. SEE LEGEND ON DRAWINGS I-00-001, I-00-002 AND I-00-003.
2. SYSTEM CODE IS 'BWH' UNLESS OTHERWISE NOTED.
3. LOCAL CONTROL DEVICES SUCH AS INDICATING LIGHTS AND SWITCHES, LOCATED ON MCCs OR AT EQUIPMENT, MAY NOT BE INDICATED ON THIS P&ID.
4. IF DISK FILTER CONTROL PANEL IS PLC EQUIPPED, IT SHALL BE EQUIPPED WITH ETHERNET COMMUNICATIONS AND CONNECTED TO THE PLANT CONTROL SYSTEM.

PRELIMINARY - NOT FOR CONSTRUCTION

NO.	BY	CK	APP	REVISIONS AND RECORD OF ISSUE	DATE

50.3082 - WTP

I-00-012.dwg

SAVED: BROSZ608, 3/4/2015 2:05:39 PM
PLOTTED: 3/5/2015 1:44:12 PM
USER: PWADMIN DWG VER: 1000

XREF1:
XREF2:
XREF3:
XREF4:

BLACK & VEATCH
Building a world of difference.
Black & Veatch Corporation
Virginia Beach, VA

BEDFORD REGIONAL WATER AUTHORITY
SMITH MOUNTAIN LAKE WTP &
RAW WATER PUMPING STATION / INTAKE

INSTRUMENTATION - P&ID
FIRST STAGE MEMBRANE BACKWASH
TREATMENT SYSTEM

DESIGNED:
DETAILED:
CHECKED:
APPROVED:
DATE: DECEMBER 2014

0 1/2 1
IF THIS BAR DOES NOT MEASURE 1" THEN DRAWING IS NOT TO FULL SCALE

PROJECT NO.
182262

I-00-013
SHEET
OF

FD7000
D7000

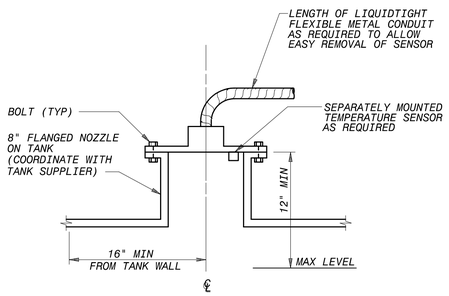

ULTRASONIC LEVEL SENSOR INSTALLATION DETAIL

NO SCALE

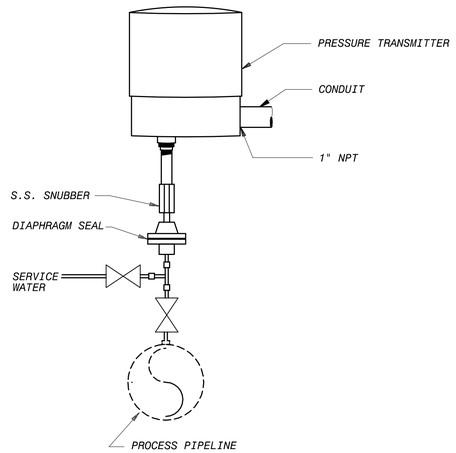

PRESSURE TRANSMITTER WITH DIAPHRAGM SEAL

NO SCALE

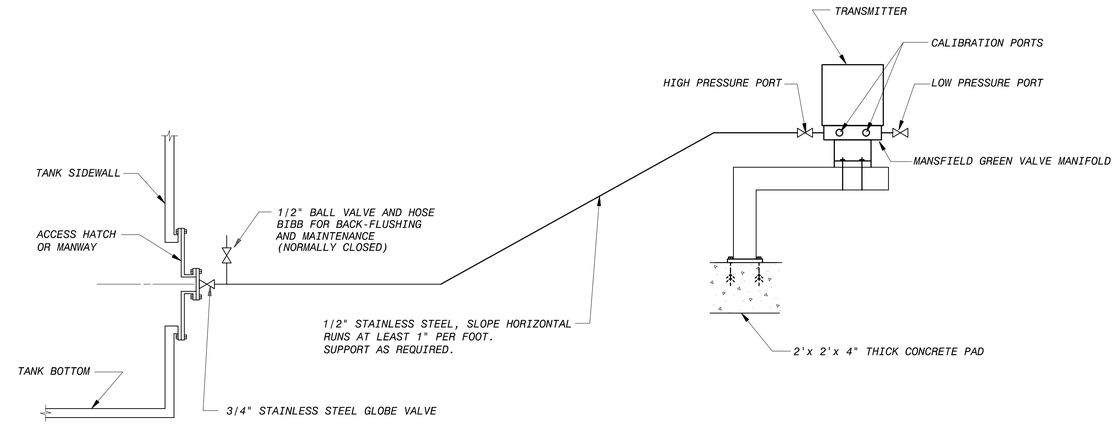

FLANGE MOUNTED PRESSURE SENSING LEVEL TRANSMITTER INSTALLATION DETAIL

NO SCALE

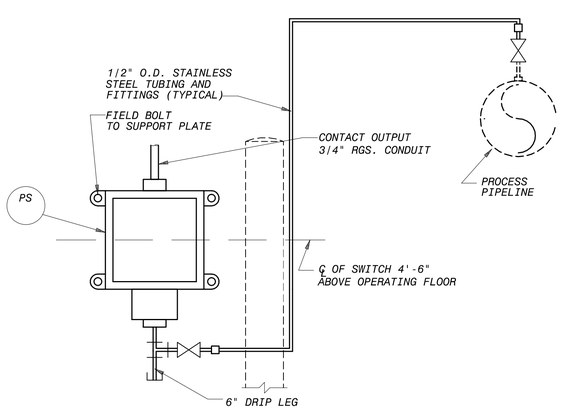

PRESSURE SWITCH (MOUNTED BELOW PROCESS)

NO SCALE

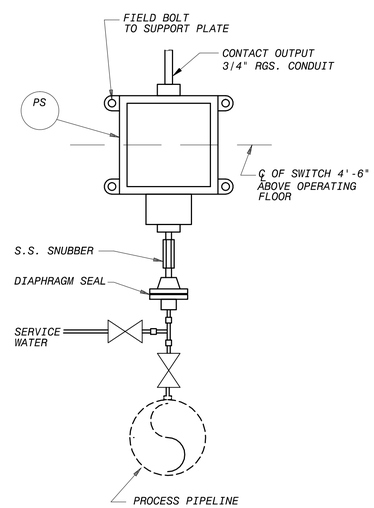

PRESSURE SWITCH (MOUNTED ABOVE PROCESS)

NO SCALE

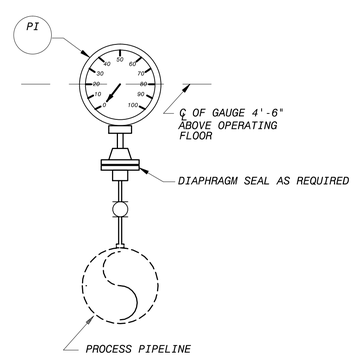

FIELD-MOUNT PRESSURE GAUGE

NO SCALE

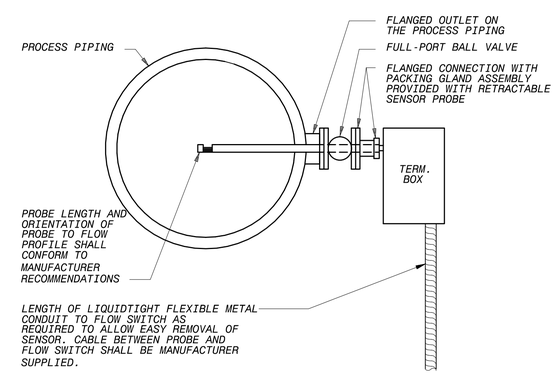

THERMAL DISPERSION FLOW SWITCH HOT-TAP TYPE SENSOR INSTALLATION DETAIL

NO SCALE

PRELIMINARY - NOT FOR CONSTRUCTION

NO.	BY	CK	APP

REVISIONS AND RECORD OF ISSUE

DATE

50.3082 - WTP

I-00-013.dwg

SAVED: BR052608, 3/3/2015 10:31:10 AM

PLOTTED: 3/5/2015 1:44:36 PM

USER: PWADMIN

DWG VER: 1001

XREF1: BORDER.dwg

XREF2:

XREF3:

XREF4:

BLACK & VEATCH
Building a world of difference.

Black & Veatch Corporation
Virginia Beach, VA

BEDFORD REGIONAL WATER AUTHORITY
SMITH MOUNTAIN LAKE WTP &
RAW WATER PUMPING STATION / INTAKE

INSTRUMENTATION
INSTRUMENT INSTALLATION DETAILS
SHEET 1 OF 3

DESIGNED: TRK
DETAILED: TRK
CHECKED:
APPROVED:
DATE: DECEMBER 2014

0 1/2 1
IF THIS BAR DOES NOT MEASURE 1" THEN DRAWING IS NOT TO FULL SCALE

PROJECT NO.
182262

I-00-013
SHEET
OF

FD7000_PW
D7000

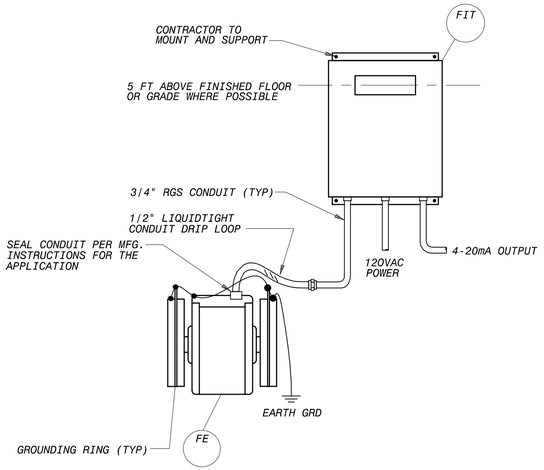

MAGNETIC FLOWMETER INSTALLATION DETAIL

NO SCALE

NOTE: PIPE TO BE SUPPORTED ON BOTH SIDES OF METER.

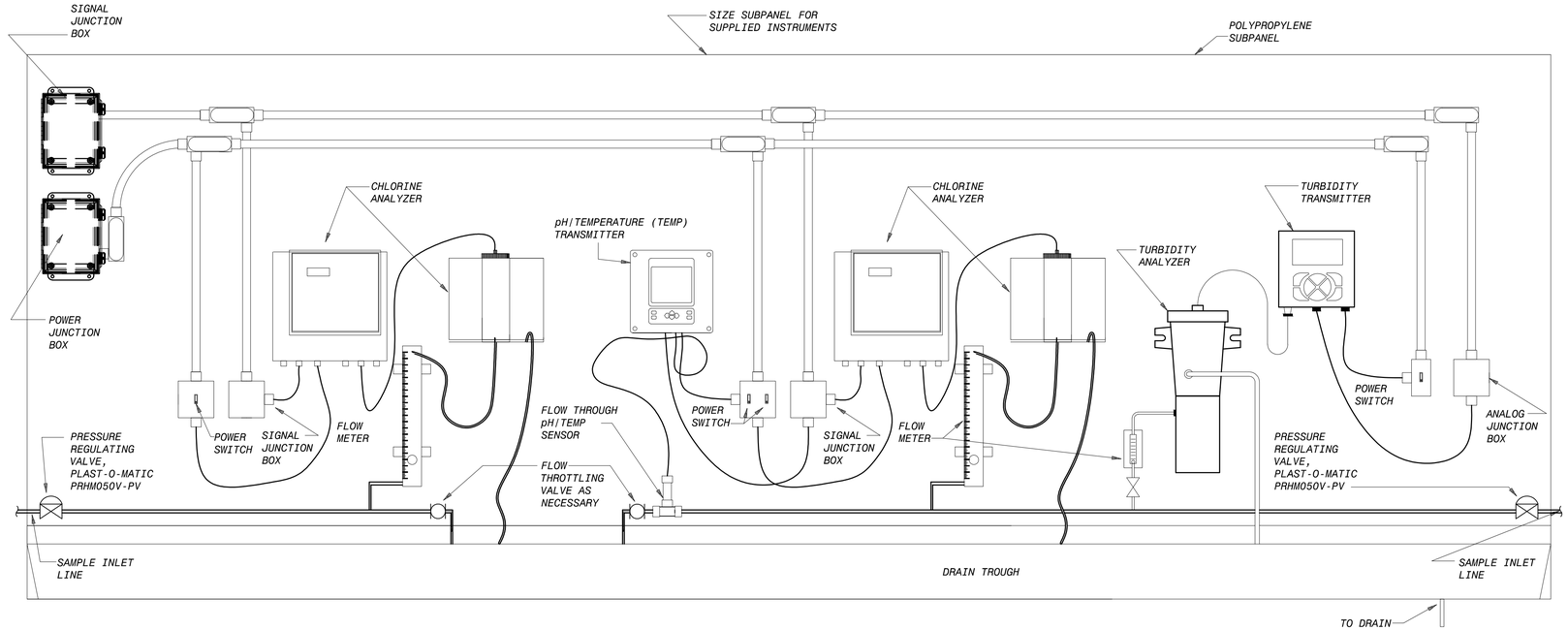

WATER QUALITY SAMPLE STATION NO.2 INSTALLATION DETAIL (FRONT)

NO SCALE

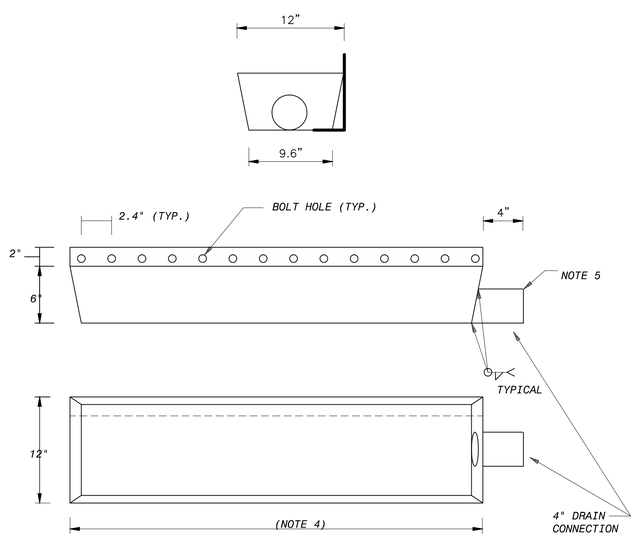

WATER QUALITY STATION DRAIN TROUGH DETAILS

NO SCALE

NOTES:
1. CONSTRUCT TROUGH USING 14 GA 304 STAINLESS STEEL.
2. ALL WELDS SHALL BE CONTINUOUS.
3. PROVIDE 1/8" STAINLESS STEEL BOLTS, 2 WASHERS, AND NUT FOR EACH BOLT HOLE FOR CONNECTION TO POLY BOARD.
4. DIMENSION TO COINCIDE WITH POLY BOARD WIDTH.
5. CONNECT TO DRAIN WITH FERNCO FITTING.

PRELIMINARY - NOT FOR CONSTRUCTION

DATE	REVISIONS AND RECORD OF ISSUE	NO.	BY	CK	APP
50.3082 - WTP					
I-00-014.dwg					
SAVED: BRO52608, 3/3/2015 10:30:18 AM					
PLOTTED: 3/5/2015 1:45:01 PM					
USER: PWADMIN	DWG VER: 1001				

XREF1: BORDER.dwg
XREF2:
XREF3:
XREF4:

BLACK & VEATCH
Building a world of difference.
Black & Veatch Corporation
Virginia Beach, VA

BEDFORD REGIONAL WATER AUTHORITY
SMITH MOUNTAIN LAKE WTP &
RAW WATER PUMPING STATION / INTAKE

INSTRUMENTATION
INSTRUMENT INSTALLATION DETAILS
SHEET 2 OF 3

DESIGNED: TRK
DETAILED: TRK
CHECKED:
APPROVED:
DATE: DECEMBER 2014

0 1/2 1
IF THIS BAR DOES NOT MEASURE 1" THEN DRAWING IS NOT TO FULL SCALE

PROJECT NO.
182262

I-00-014
SHEET
OF

FD7000_PW
D7000

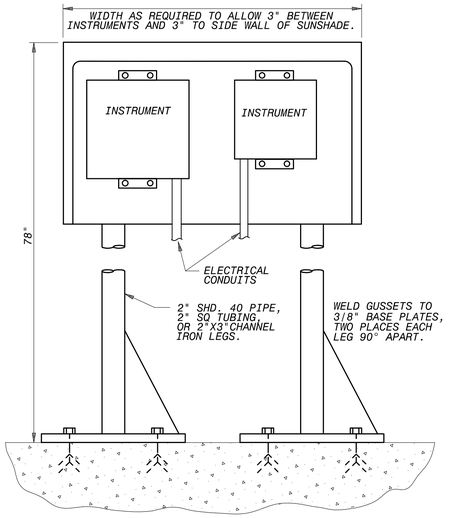

FRONT VIEW 2

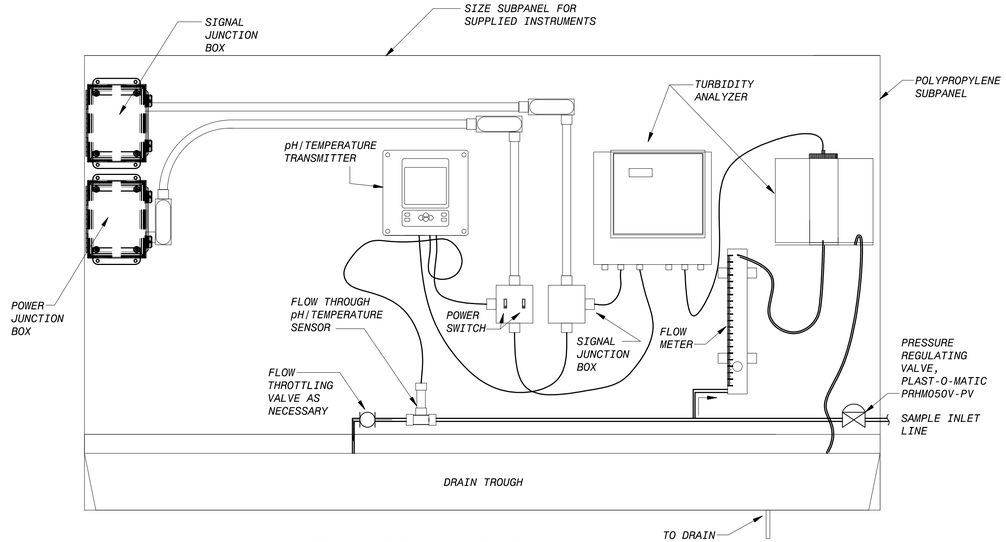

WATER QUALITY SAMPLE STATION NO.1
INSTALLATION DETAIL (FRONT)
NO SCALE

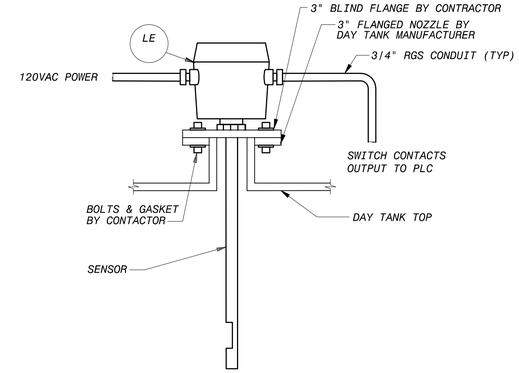

DAY TANK TOP MOUNTED
ULTRASONIC LEVEL SWITCH
INSTALLATION DETAIL
NO SCALE

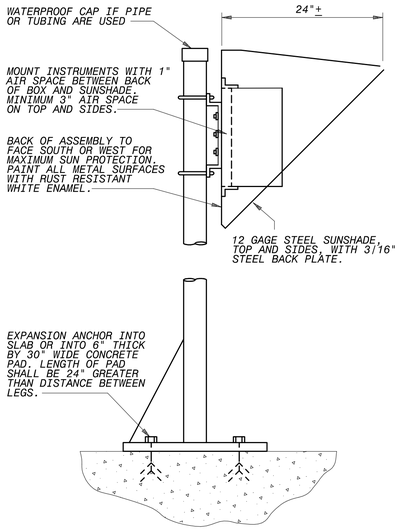

SIDE VIEW

OUTDOOR INSTRUMENT MOUNTING DETAIL E
NO SCALE

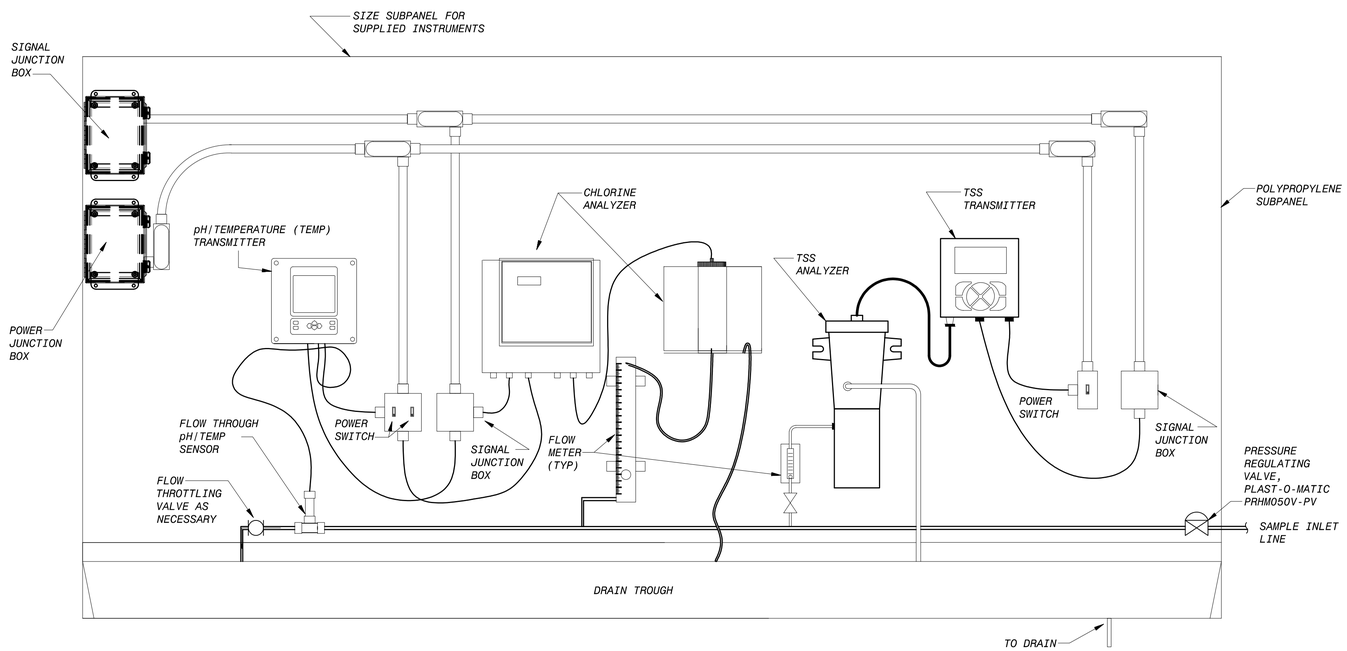

WATER QUALITY SAMPLE STATION NO.3
INSTALLATION DETAIL (FRONT)
NO SCALE

PRELIMINARY - NOT FOR CONSTRUCTION

DATE	REVISIONS AND RECORD OF ISSUE	NO.	BY	CK	APP
50.3082 - WTP					
I-00-015.dwg					
SAVED: BRO52608, 3/3/2015 10:31:50 AM					
PLOTTED: 3/5/2015 1:45:27 PM					
USER: PWADMIN	DWG VER: 1001				

XREF1: BORDER.dwg
XREF2:
XREF3:
XREF4:

BLACK & VEATCH
Building a world of difference.
Black & Veatch Corporation
Virginia Beach, VA

BEDFORD REGIONAL WATER AUTHORITY
SMITH MOUNTAIN LAKE WTP &
RAW WATER PUMPING STATION / INTAKE

INSTRUMENTATION
INSTRUMENT INSTALLATION DETAILS
SHEET 3 OF 3

DESIGNED: TRK
DETAILED: TRK
CHECKED:
APPROVED:
DATE: DECEMBER 2014

0 1/2 1
IF THIS BAR DOES NOT MEASURE 1" THEN DRAWING IS NOT TO FULL SCALE

PROJECT NO.
182262

I-00-015
SHEET
OF

FD7000_PW
D7000

SYSTEM CODE - DENOTES ASSOCIATED SYSTEM STREAM
FUNCTION CODE - DENOTES ASSOCIATED EQUIPMENT ABBREVIATION
SEQUENCE CODE - UNIQUE ALPHA-NUMERIC IDENTIFIER

SSS - FFF - 999

EQUIPMENT IDENTIFICATION DESCRIPTION

PIPE SIZE - INCHES UNLESS OTHERWISE NOTED
SYSTEM CODE - DENOTES ASSOCIATED SYSTEM STREAM
MATERIAL CODE - DENOTES ASSOCIATED MATERIAL ABBREVIATION

SSS - FFF - 999

PIPELINE IDENTIFICATION DESCRIPTION

LINE SYMBOLS

- MAJOR PROCESS PIPING OR FLOW CHANNEL
- SECONDARY PROCESS PIPING
- MISCELLANEOUS PIPING
- SCREENED LINE DENOTES EXISTING PIPE OR EQUIPMENT
- DASHED LINE DENOTES FUTURE PIPE AND EQUIPMENT
- ELECTRIC SIGNAL
- HYDRAULIC SIGNAL
- PNEUMATIC SIGNAL
- SIGNAL CONNECTION POINT
- INTERNAL SYSTEM SIGNAL LINK (SOFTWARE OR DATA LINK)
- B PI-4 — SIGNAL LINE GOING TO ANOTHER SHEET
- B PI-4 — SIGNAL LINE FROM ANOTHER SHEET (MATCH LETTERS)
- FLOW ARROW FOR PROCESS PIPING
- B PI-45 — PROCESS LINE GOING TO ANOTHER SHEET; MATCH SHEET NO. IDENTIFIER; MATCH LINE NO.
- B PI-45 — PROCESS LINE COMING FROM ANOTHER SHEET
- PROCESS LINES CROSSING (NOT CONNECTED)

MECHANICAL EQUIPMENT SYMBOLS

- VAPORIZER: WATER BATH
- VAPORIZER: AMBIENT
- PARTICULATE FILTER
- AIR STRIPPER OR PACKED TOWER
- MIXER
- AIR FILTER
- WATER FILTER: CARTRIDGE TYPE
- WATER FILTER: MEMBRANE TYPE
- FLOCCULATION MIXER
- COMPRESSOR
- VALVE: MATERIAL HANDLING ROTARY
- AIR REGULATOR
- HEAT EXCHANGER: TYPE 1
- HEAT EXCHANGER: TYPE 2
- HEAT EXCHANGER: FINNED TUBE
- HEAT EXCHANGER: SHELL & TUBE
- HEAT EXCHANGER: PLATE & FRAME
- HEAT EXCHANGER: SPIRAL
- HEAT EXCHANGER: TUBE-IN-TUBE
- HEAT EXCHANGER: AIR
- BOILER
- PACKAGED AIR COMPRESSOR SYSTEM
- COOLING TOWER
- AFTERCOOLER
- STATIC MIXER
- WATER HEATER
- FILTER SEPARATOR
- SILENCER
- SWIVEL
- DAMPER
- DAMPER: PARALLEL BLADE
- DAMPER: OPPOSITE BLADE

PUMP & BLOWER SYMBOLS

- CENTRIFUGAL PUMP OR OTHER TYPE NOT SPECIFIED
- SUBMERGED CENTRIIFUGAL PUMP
- SCREW (LIFT) PUMP
- ROTARY PUMP
- PROGRESSING CAVITY PUMP
- POSITIVE DISPLACEMENT PUMP
- PLUNGER PUMP
- VERTICAL PUMP
- SUMP PUMP
- CENTRIFUGAL FAN
- METERING PUMP
- TURBINE COMPRESSOR
- STEAM COMPRESSOR
- GAS TURBINE ENGINE
- CENTRIFUGAL BLOWER
- POSITIVE DISPLACEMENT BLOWER
- COMPRESSOR: RECIPROCATING
- COMPRESSOR: ROTARY SCREW
- COMPRESSOR: LIQUID RING
- DIAPHRAGM METERING PUMP
- S — SOLENOID PUMP
- PERISTALTIC PUMP
- DRUM PUMP
- DOUBLE DIAPHRAGM
- T — TURBINE
- SUMP PUMP
- BELL MOUNTED PUMP

WATER PROCESS SYMBOLS

- GRAVITY FILTER
- RECTANGULAR SEDIMENTATION BASIN
- RECTANGULAR SEDIMENTATION BASIN W/SETTLING PLATES
- CIRCULAR SEDIMENTATION BASIN
- OZONE GENERATOR WITH POWER SUPPLY
- OZONE GENERATOR
- PRESSURE FILTER- VERTICAL
- PRESSURE FILTER- HORIZONTAL
- CONTINUOUS UPFLOW FILTER
- CONTINUOUS UPFLOW FILTER
- M — SCUM COLLECTOR
- DAF
- PACKAGED PLANT
- UV REACTOR
- RECTANGULAR BASIN
- SOLIDS COLLECTOR
- SOLIDS COLLECTOR W/SETTLING PLATES

PRIMARY ELEMENT & FITTING SYMBOLS

- DIAPHRAGM SEAL
- PRIMARY FLOW ELEMENT: ORIFICE PLATE
- PRIMARY FLOW ELEMENT: FLUME
- PRIMARY FLOW ELEMENT: TURBINE OR PROPELLER-TYPE
- PRIMARY FLOW ELEMENT: ELECTROMAGNETIC
- THERMAL DISPERSION TYPE FLOW ELEMENT
- PRIMARY FLOW ELEMENT: TRANSIT-TIME ULTRASONIC
- TE 101 — TEMPERATURE ELEMENT WITH THERMOWELL
- LE — ELECTRODE TYPE LEVEL SWITCH
- ANNULAR TYPE DIAPHRAGM SEAL
- PRIMARY FLOW ELEMENT: POSITIVE DISPLACEMENT
- PRIMARY FLOW ELEMENT: VENTURI TUBE
- PRIMARY FLOW ELEMENT: WEIR
- PRIMARY FLOW ELEMENT: PITOT TUBE
- PRIMARY FLOW ELEMENT: CORIOLIS
- PRIMARY FLOW ELEMENT: DOPPLER TYPE ULTRASONIC
- FE 100 — PRIMARY ELEMENT: ROTAMETER
- LE 100 — ULTRASONIC LEVEL ELEMENT
- REDUCER - CONCENTRIC
- REDUCER - ECCENTRIC
- FLANGE
- D — DRAIN - BELL-UP
- D — DRAIN - FUNNEL
- FLEXIBLE CONNECTION
- CAP
- PLUG
- T — TRAP
- FLAME CHECK
- SURGE CHAMBER
- LE 100 — GUIDED WAVE RADAR ELEMENT
- FLAME ARRESTER
- SEDIMENT TRAP
- UNION
- HOSE CONNECTION
- STRAINER - Y TYPE
- STRAINER - BASKET
- Q — QUICK CONNECT
- VENT
- VENT - SCREENED
- COUPLING
- SIGHTGLASS
- MOISTURE SEPARATOR

VALVE & GATE SYMBOLS

- GATE: SLUICE, SLIDE, OR WEIR
- VALVE: GATE OR OTHER IN-LINE TYPE NOT OTHERWISE IDENTIFIED
- VALVE: BALL
- VALVE: GLOBE
- VALVE: BUTTERFLY, DAMPER OR LOUVER
- VALVE: PLUG
- VALVE: THREE WAY
- VALVE: FOUR WAY
- VALVE: CHECK
- VALVE: ANGLE
- VALVE: SET STOP
- VALVE: PINCH
- VALVE: CHLORINE
- VALVE: CHLORINE WITH YOKE
- VALVE: DIAPHRAGM
- VALVE: NEEDLE
- VALVE: PRESSURE REDUCING
- VALVE: PRESSURE SUSTAINING
- VALVE: PRESSURE REDUCING (SELF ACTUATING TYPE)
- VALVE: PRESSURE SUSTAINING (SELF ACTUATING TYPE)
- VALVE: PILOT
- VALVE: VACUUM RELIEF
- VALVE: PRESSURE RELIEF
- VALVE: PRESSURE/VACUUM RELIEF
- VALVE: FOUR FUNCTION
- GATE: STOP PLATE
- AIR RELEASE OR AIR VACUUM/RELIEF VALVE
- VALVE: AIR-VACUUM
- VALVE: AIR RELEASE
- VALVE: THERMAL SHUTOFF
- VALVE: MUD
- VALVE: SLEEVE
- VALVE: KNIFE GATE
- M — CHLORINE VACUUM REGULATOR
- BACKFLOW PREVENTER
- GATE: FLAP
- VACUUM BREAKER
- EXPLOSION RELIEF

MATERIAL HANDLING EQUIPMENT SYMBOLS

- CYCLONE SEPARATER
- BIN: LIVE BOTTOM
- BIN: SLIDING FRAME
- SCREEN: SINGLE VIBRATORY
- SCREEN: DOUBLE VIBRATORY
- GRINDER
- PELLETIZER
- BIN - OPEN TOP
- BIN - CLOSED TOP
- CONVEYOR: SCREW
- CONVEYOR: BUCKET
- CONVEYOR: BELT
- CONVEYOR: VIBRATORY
- PISTON CAKE PUMP: SINGLE
- PISTON CAKE PUMP: DOUBLE
- MIXER: PUGMILL
- MIXER: BLENDER

CHEMICAL FEED EQUIPMENT SYMBOLS

- DIFFUSER: TANK
- DIFFUSER: CHANNEL
- INJECTOR
- RUPTURE DISK
- PULSATION DAMPNER
- CHEMICAL INDUCTION UNIT
- CHLORINE CYLINDER
- VAPOR SUPERHEATER
- PRESSURE BUILDING COIL
- CALIBRATION COLUMN
- EXPANSION TANK OR FUNNEL
- WEIGH SCALE
- DRIP LEG HEATER
- SCALE
- TOTE — TOTE
- AS — AUTOMATIC SWITCHOVER
- GAS FEEDER
- EVAPORATOR
- DRY CHEMICAL FEEDER
- TON CONTAINER
- POLYMER BLENDER FEEDER
- POLYMER BLENDER FEEDER
- PASTE TYPE LIME SLAKER
- POLYMER ACTIVATION CHAMBER — POLYMER ACTIVATION CHAMBER
- DIFFUSER
- POLYMER INJECTION RING
- ACTIVATION CHAMBER

VALVE AND GATE ACTUATOR SYMBOLS

- P — AIR CYLINDER
- P/O — AIR-OIL CYLINDER
- H — HYDRAULIC CYLINDER
- E/H — ELECTRO HYDRAULIC
- S — SOLENOID
- M — STANDARD ELECTRIC
- M P — PROGRAMMABLE ELECTRIC
- M N — NETWORKED ELECTRIC
- M SM — SMALL MOTOR ACTUATOR
- H CW — CHAINWHEEL
- H WN — WRENCHNUT
- H HW — HANDWHEEL
- H L — LEVER

THE FOLLOWING ADDITIONAL DESIGNATIONS MAY BE UTILIZED ADJACENT TO SOME VALVE OR GATE SYMBOLS.

NC NORMALLY CLOSED
NO NORMALLY OPEN
FC FAILS CLOSED
FO FAILS OPEN
FIP FAILS IN LAST POSITION
MOD MODULATING

GENERAL NOTES

1. IN GENERAL, THE P &ID SYMBOLS AND DEVICE IDENTIFICATIONS ARE BASED ON INSTRUMENT SOCIETY OF AMERICA, STANDARD PRACTICE ISA-S5.1 (1988). SOME MODIFICATIONS, ADDITIONS, AND ALTERATIONS HAVE BEEN MADE AS NEEDED TO ACCOMMODATE THE PROJECT REQUIREMENTS.
2. SOME CONTROL AND INTERLOCK REQUIREMENTS WHICH CAN BE MORE CLEARLY ILLUSTRATED ON SCHEMATIC DRAWINGS HAVE BEEN OMITTED FROM THE P & ID DRAWINGS.
3. THIS IS A GENERAL LEGEND SHEET. SOME SYMBOLS AND ABBREVIATIONS MAY NOT BE UTILIZED ON THIS SPECIFIC PROJECT.
4. PIPING AND EQUIPMENT LEGEND APPLIES TO P & ID SHEETS ONLY AND MAY DIFFER FROM LEGENDS FOR OTHER SHEETS.

PRELIMINARY - NOT FOR CONSTRUCTION

NO.	BY	CK	APP	REVISIONS AND RECORD OF ISSUE	DATE

50.3081 - RWPS
I-01-001.dwg
SAVED: VAN16843, 12/18/2014 4:19:25 PM
PLOTTED: 3/5/2015 1:06:00 PM
USER: PWADMIN
XREF1: BORDER.dwg
XREF2:
XREF3:
XREF4:
DWG VER: 1000

BLACK & VEATCH
Building a world of difference.
Black & Veatch Corporation
Virginia Beach, VA

BEDFORD REGIONAL WATER AUTHORITY
SMITH MOUNTAIN LAKE WTP &
RAW WATER PUMPING STATION / INTAKE

INSTRUMENTATION
RAW WATER PUMP STATION
LEGEND AND ABBREVIATIONS - SHEET 1 OF 3

DESIGNED:
DETAILED:
CHECKED:
APPROVED:
DATE:

0 1/2 1
IF THIS BAR DOES NOT MEASURE 1" THEN DRAWING IS NOT TO FULL SCALE

PROJECT NO.
182262

I-01-001
SHEET
OF

FD7000_PW
D7000

INSTRUMENT TAG NUMBERS
MEANINGS OF IDENTIFICATION LETTERS

LETTER	FIRST LETTER: MEASURED OR INITIATING VARIABLE	FIRST LETTER: MODIFIER	SUCCEEDING LETTERS: READOUT OR PASSIVE FUNCTION	SUCCEEDING LETTERS: OUTPUT FUNCTION	SUCCEEDING LETTERS: MODIFIER
A	ANALYSIS		ALARM		
B	BURNER, COMBUSTION		USER'S CHOICE	USER'S CHOICE	USER'S CHOICE
C	CONDUCTIVITY (ELECTRICAL)			CONTROL	CLOSED
D	DENSITY (MASS) OR SPECIFIC GRAVITY	DIFFERENTIAL			
E	VOLTAGE (EMF)		PRIMARY ELEMENT		
F	FLOW RATE	RATIO (FRACTION)			
G	USER'S CHOICE		GLASS		
H	HAND (MANUALLY INITIATED)				HIGH
I	CURRENT (ELECTRICAL)		INDICATE		
J	POWER	SCAN			
K	TIME OR TIME-SCHEDULE	TIME RATE OF CHANGE		CONTROL STATION	
L	LEVEL		LIGHT (PILOT)		LOW
M	MOISTURE OR HUMIDITY	MOMENTARY			MIDDLE OR INTER-MEDIATE
N	INTRUSION		USER'S CHOICE	USER'S CHOICE	USER'S CHOICE
O	USER'S CHOICE		ORIFICE (RESTRICTION)		OPEN
P	PRESSURE OR VACUUM		POINT (TEST CONNECTION)		
Q	QUANTITY	INTEGRATE OR TOTALIZE	INTEGRATE OR TOTALIZE		
R	RADIATION		RECORD OR PRINT		
S	SPEED OR FREQUENCY	SAFETY		SWITCH	
T	TEMPERATURE			TRANSMIT	
U	MULTIVARIABLE		MULTIFUNCTION	MULTIFUNCTION	MULTIFUNCTION
V	VIBRATION			VALVE, DAMPER, OR LOUVER	
W	WEIGHT OR FORCE		WELL		
X	UNCLASSIFIED		UNCLASSIFIED	UNCLASSIFIED	UNCLASSIFIED
Y	EVENT, STATE, OR PRESENCE			RELAY OR COMPUTE	
Z	POSITION, DIMENSION			DRIVE, ACTUATOR OR UNCLASSIFIED FINAL CONTROL ELEMENT	

GENERAL INSTRUMENT SYMBOLS

- FIELD MOUNTED INSTRUMENT
- INSTRUMENT MOUNTED ON FACE OF PANEL
- INSTRUMENT MOUNTED BEHIND OR INSIDE OF PANEL
- INSTRUMENT MOUNTED ON FACE OF LOCAL PANEL
- INSTRUMENT MOUNTED BEHIND OR INSIDE OF LOCAL PANEL
- SINGLE INSTRUMENT HOUSING CONTAINING TWO (OR MORE) INSTRUMENTATION FUNCTIONS
- I — CONTROL INTERLOCK FUNCTION, SEE SCHEMATICS AND SYSTEM SPECIFICATIONS FOR SPECIFIC FUNCTION

DIGITAL SYSTEMS INTERFACE SYMBOLS

NOTE: REFER TO DETAILED SYSTEM SPECIFICATIONS FOR FUNCTIONAL DESCRIPTION. ALSO SEE I/O SCHEDULES FOR COMPLETE INPUT AND OUTPUT LISTINGS.

- COMPUTER, DISTRIBUTED CONTROL SYSTEM, OR DISPLAY FUNCTION BLOCK
- LETTERS, TAG NUMBERS, ABBREVIATIONS AND OTHER ANNOTATIONS ARE SIMILAR TO THE GENERAL INSTRUMENT LEGEND
- DIGITAL SYSTEM I/O INTERFACE DIRECTION OF ARROW DENOTES WHETHER INPUT OR OUTPUT
- ▽ DISCRETE I/O
- ▲ ANALOG I/O

TAG NUMBERS AND ADDITIONAL DESIGNATIONS

TRC 31-1

- FIRST LETTER
- SUCCEEDING LETTERS
- NUMBER AFTER DASH (-1, -2, ETC) DENOTES MULTIPLE DEVICES USED IN IDENTICAL DUPLICATE SYSTEMS.
- A LETTER AFTER THE LOOP NUMBER (31A, 31B, ETC) IS USED TO DISTINGUISH MULTIPLE SIMILAR DEVICES IN THE SAME INSTRUMENT LOOP.
- B — LOOP DESIGNATION NUMBER

pH — SEE INSTRUMENT FUNCTIONAL DESIGNATIONS AND ABBREVIATIONS.

FUNCTION DESIGNATIONS AND ABBREVIATIONS

INSTRUMENT DESIGNATIONS

K	GAIN OR ATTENUATE (INPUT:OUTPUT)
-K	GAIN AND REVERSE
Σ	ADD OR SUM (ADD AND SUBTRACT)
Δ	SUBTRACT (DIFFERENCE)
√‾	EXTRACT SQUARE ROOT
÷	DIVIDE
F(X)	CHARACTERIZE SIGNAL
>	HIGH-SELECT
<	LOW-SELECT
×	MULTIPLY
∫	INTEGRATE (TIME INTEGRAL)
CH_4	METHANE
CL_2	CHLORINE RESIDUAL
CO_2	CARBON DIOXIDE
DO	DISSOLVED OXYGEN
LEL	LOWER EXPLOSIVE LIMIT
MCC	MOTOR CONTROL CENTER
MLSS	MIXED LIQUOR SUSPENDED SOLIDS
O_2	OXYGEN (PURITY)
pH	pH CELL
TURB	TURBIDITY
COMB	COMBUSTIBLE GAS
UVI	UV INTENSITY

HAND SWITCH DESIGNATIONS

HOA	HAND-OFF-AUTO
LR	LOCAL-REMOTE
OC	OPEN-CLOSE
OO	ON-OFF
LOR	LOCAL-OFF-REMOTE
MOC	MEMBRANE-OFF-CENTRIFUGE
OOA	ON-OFF-AUTO
OCR	OPEN-CLOSE-REMOTE
OOR	ON-OFF-REMOTE
FR	FORWARD-REVERSE
ESTOP	EMERGENCY STOP
ST	START
STP	STOP
HOR	HAND-OFF-REMOTE
OPN	OPEN
CLS	CLOSED
OR	OFF-REMOTE

TRANSDUCER & CONVERTER DESIGNATION

E	VOLTAGE
FSK	FREQUENCY SHIFT KEYING
H	HYDRAULIC
I	CURRENT
P	PNEUMATIC PULSE
PD	PULSE DURATION
PF	PULSE FREQUENCY
R	RESISTANCE (ELECTRICAL)

EXAMPLE: I/P = CURRENT TO PNEUMATIC TRANSDUCER

POWER SUPPLY ABBREVIATIONS

AS	AIR SUPPLY
ES	ELECTRIC SUPPLY
GS	GAS SUPPLY
HS	HYDRAULIC SUPPLY
NS	NITROGEN SUPPLY
SS	STEAM SUPPLY
WS	WATER SUPPLY

AS — POWER SUPPLY SOURCE LABEL. USED ONLY WHERE NECESSARY TO HELP CLARIFY AN INSTRUMENT OR SYSTEM FUNCTION.

GENERAL NOTES

1. IN GENERAL, THE P&ID SYMBOLS AND DEVICE IDENTIFICATIONS ARE BASED ON INSTRUMENT SOCIETY OF AMERICA, STANDARD PRACTICE ISA-S5.1 (1988). SOME MODIFICATIONS, ADDITIONS, AND ALTERATIONS HAVE BEEN MADE AS NEEDED TO ACCOMMODATE THE PROJECT REQUIREMENTS.
2. SOME CONTROL AND INTERLOCK REQUIREMENTS WHICH CAN BE MORE CLEARLY ILLUSTRATED ON SCHEMATIC DRAWINGS HAVE BEEN OMITTED FROM P&ID DRAWINGS.
3. THIS IS A GENERAL LEGEND SHEET. SOME SYMBOLS AND ABBREVIATIONS MAY NOT BE UTILIZED ON THIS SPECIFIC PROJECT. B
4. PIPING AND EQUIPMENT LEGEND APPLIES TO P&ID SHEETS ONLY AND MAY DIFFER FROM LEGENDS FOR OTHER SHEETS.

PIPELINE MATERIAL CODE ABBREVIATIONS

PCCP	SECTION 02612, PRESTRESSED CONCRETE CYLINDER PIPE
CBWS	SECTION 02614, CONCRETE BAR-WRAPPED, STEEL CYLINDER PIPE
LHCPP	SECTION 02616, LOW HEAD CONCRETE PRESSURE PIPE
RCP	SECTION 02618, CONCRETE PIPE
PVC	SECTION 15061, POLYVINYL CHLORIDE PIPE
DIP	SECTION 15061, DUCTILE IRON PIPE
SP	SECTION 15062, STEEL PIPE
LWS-XX	SECTION 15063, LIGHT WALL STEEL PIPE
SS-XX1	SECTION 15064, STAINLESS STEEL PIPE, TUBING, AND ACCESSORIES
CSG-XX	SECTION 15065, MISCELLANEOUS STEEL PIPE, TUBING, AND ACCESSORIES
CS-XX	SECTION 15065, MISCELLANEOUS STEEL PIPE, TUBING, AND ACCESSORIES
FRPE-XX	SECTION 15066, FIBERGLASS REINFORCED PLASTIC PIPE (EXHAUST AIR SERVICE)
FRP-XX	SECTION 15067, MISCELLANEOUS PLASTIC PIPE, TUBING, AND ACCESSORIES
PVC-XX	SECTION 15067, MISCELLANEOUS PLASTIC PIPE, TUBING, AND ACCESSORIES
CPVC-XX	SECTION 15067, MISCELLANEOUS PLASTIC PIPE, TUBING, AND ACCESSORIES
PE-XX	SECTION 15067, MISCELLANEOUS PLASTIC PIPE, TUBING, AND ACCESSORIES
PP-XX	SECTION 15067, MISCELLANEOUS PLASTIC PIPE, TUBING, AND ACCESSORIES
PVDF-XX	SECTION 15067, MISCELLANEOUS PLASTIC PIPE, TUBING, AND ACCESSORIES
RPT-XX	SECTION 15067, MISCELLANEOUS PLASTIC PIPE, TUBING, AND ACCESSORIES
SS	SECTION 15068, AWWA STAINLESS STEEL PIPE
CI-XX	SECTION 15069, CAST IRON SOIL PIPE AND ACCESSORIES
CU-XX	SECTION 15070, COPPER TUBING AND ACCESSORIES
BR-XX	SECTION 15060, MISCELLANEOUS PIPING AND PIPE ASSEMBLY
HS-XX	SECTION 15060, MISCELLANEOUS PIPING AND PIPE ASSEMBLY
TG-XX	SECTION 15060, MISCELLANEOUS PIPING AND PIPE ASSEMBLY
CRP-XX	SECTION 15060, MISCELLANEOUS PIPING AND PIPE ASSEMBLY

1. XX= numbers 01-20

PRELIMINARY - NOT FOR CONSTRUCTION

NO.	BY	CK	APP	REVISIONS AND RECORD OF ISSUE	DATE

50.3081 - RWPS
I-01-002.dwg
SAVED: BR053608, 12/30/2014 11:51:33 AM
PLOTTED: 1/5/2015 1:36:26 PM
USER: PWADMIN
XREF1: BORDER.dwg
XREF2:
XREF3:
XREF4:
DWG VER: 1000

BLACK & VEATCH
Building a world of difference.
Black & Veatch Corporation
Virginia Beach, VA

BEDFORD REGIONAL WATER AUTHORITY
SMITH MOUNTAIN LAKE WTP &
RAW WATER PUMPING STATION / INTAKE

INSTRUMENTATION
RAW WATER PUMP STATION
LEGEND AND ABBREVIATIONS - SHEET 2 OF 3

DESIGNED:
DETAILED:
CHECKED:
APPROVED:
DATE: DECEMBER 2014

0 1/2 1
IF THIS BAR DOES NOT MEASURE 1" THEN DRAWING IS NOT TO FULL SCALE

PROJECT NO.
182262

I-01-002
SHEET
OF

FD7000_PW
D7000

SYSTEM CODE ABBREVIATIONS

ACETIC ACID	ACE	FLOCCULATION	FLC	RESIDUALS	RES
ACETYLENE	ACT	GASEOUS OXYGEN	GOX	RETURN ACTIVATED SLUDGE	RAS
ACTIVATED CARBON - GRANULAR	GAC	GASOLINE	GSL	REVERSE OSMOSIS	ROS
AERATION AIR/PROCESS AIR	AIR	GREASE	GRS	SCREENINGS	SCR
AERATION SYSTEM	AER	GRIT	GRT	SCREEN, FINE	FSC
AIR WASH	ARW	HELIUM	HEL	SECONDARY CLARIFICATION	SCL
ALUMINUM SULFATE	ALS	HYDRAULIC FLUID	HFL	SECONDARY SCUM	SSC
AMMONIUM SULFATE	NSO4	HYDROCHLORIC ACID	HCL	SEPTAGE	SEP
ANHYDROUS AMMONIA	NH3	HYDROFLUOSILIC ACID (FLUORIDE)	HFS	SETTLED WATER	SET
ANTI-SEALANT	AS	HYDROGEN	HYD	SEWAGE	SEW
AQUA AMMONIA	NHOH	HYDROGEN PEROXIDE	PER	SODA ASH	NAC
ARGON	ARG	INCINERATION	INC	SODIUM ACETATE	NAA
ASH	ASH	INFLUENT PUMPING	INFP	SODIUM ALUMINATE	NAL
BACKWASH - MEMBRANE/FILTER	BWH	INTAKE	INT		
BALLASTED FLOCCULATION	BAL	LAGOON STORAGE	LAG	SODIUM BICARBONATE	NBC
BIOSOLIDS	BIO	LAND APPLICATION	LAP	SODIUM BISULFITE	NHS
BIOTOWER	BIT	LIME - HYDRATED	CAH	SODIUM CHLORIDE	NCL
BLENDED SLUDGE	BLS	LIME - QUICKLIME	CAO	SODIUM CHLORITE	NCL2
BNR	BNR	LIME STABILIZATION	LIM	SODIUM FLUORIDE	NAF
BRINE	BRN	LIQUID OXYGEN	LOX	SODIUM HEXAMETAPHOSPHATE	NAX
CALCIUM HYPOCHLORITE	CACL	LP GAS OR PROPANE GAS	LPG	SODIUM HYDROXIDE	NAOH
CALCIUM THIOSULFATE	CATS	MAGNESIUM HYDROXIDE	MGOH	SODIUM HYPOCHLORITE	NOCL
CARBON DIOXIDE	CO2	MEMBRANE	MEM	SODIUM SILICOFLUORIDE	NASF
CARBON SLURRY	CAS	MEMBRANE BIOREACTOR	MBR	STEAM	STM
CARBONIC ACID	HCO3	METHANE GAS	MEG	STORM SEWER	STS
CENTRATE	CEN	METHANOL	MTH	STORM WATER	STW
CHEMICAL ENHANCED BACKWASH - MEMBRANE	CEB	MIXED LIQUOR	MXL	SULFUR DIOXIDE	SO2
CHLORINE	CL2	NATURAL GAS	NG	SULFURIC ACID	HSO4
CHLORINE DIOXIDE	CLO2	NITROGEN	NIT	SURFACE WASH	SW
CITRIC ACID	CA	NITROUS OXIDE	NIO	TERTIARY TREATMENT	TERT
CLEAN IN PLACE	CIP	ODOR CONTROL	ODC	THICKENED PRIMARY SLUDGE	TPRS
COAGULATION	COA	OIL	OIL	THICKENED WASTE ACTIVATED SLUDGE	TWAS
COMPRESSED AIR - INSTRUMENT	CAI	OIL - FUEL	FO	THICKENING	THCK
COMPRESSED AIR - SERVICE	CMS	OZONE	OZN	TREATED WATER	TW
COPPER SULFATE	CUS	OZONE DESTRUCT	OZD	TRICKLING FILTER	TF
CORROSION INHIBITOR	CI	PHOSPHATE	PPP	ULTRAVIOLET	UV
DECHLORINATION	DCL	PHOSPHORIC ACID	PO4	VACUUM	VAC
DETERGENT	DET	POLYALUMINUM CHLORIDE	PCL	WASH WATER	WW
DEWATERING	DWT	POLYMER	POLF	WASTE ACTIVATED SLUDGE	WAS
DIESEL FUEL	FUE	POTASSIUM PERMANGANATE	KMN	WASTE WASH WATER	WWW
DIGESTER GAS	DGG	POWDERED ACTIVATED CARBON	PAC	WATER - CONDENSATE	CDW
DIGESTER GAS MIXING	DGM	PRE-AERATION	PAR	WATER - COOLING	COLW
DIGESTER SLUDGE	DGS	PRESEDIMENTATION	PSD	WATER - DISTILLED WATER	DW
DIGESTION - AEROBIC	DGA	PRIMARY CLARIFICATION	PRC	WATER - FINISHED	FW
DIGESTION - ANAEROBIC	DIG	PRIMARY SCUM	PSC	WATER - IRRIGATION	IRW
DISINFECTION CONTACT BASIN	DCB	PRIMARY SLUDGE	PRS	WATER - OZONATED	OZW
DISSOLVED AIR FLOTATION	DAF	RAW WASTEWATER PUMPING	WWP	WATER - SEAL	SWT
DRAINAGE	DRN	RAW WATER PUMPING	RWP	WATER - WATER HEATING	HW
EFFLUENT PUMPING	EFP	RAW WATER STORAGE	RWS	WATER DEIONIZED	DEIW
ENGINE EXHAUST	EXH	RECIRCULATED SLUDGE	RCS	WATER NON-POTABLE	NPW
ENGINE GENERATOR	DF	RECLAIMED WATER	RCW	WATER PLANT EFFLUENT	PEW
EQUALIZATION BASIN	EQB	RECORDER	REC	WATER POTABLE	PW
FERRIC CHLORIDE	FEC	REFRIGERANT	REF	WATER RAW	RW
FERRIC SULFATE	FES			WET WEATHER TREATMENT	WWT
FERROUS CHLORIDE	FRC			ZINC ORTHOPHOSPHATE	ZOP
FERROUS SULFATE	FRS				
FILTRATION	FLT				

FUNCTION CODE ABBREVIATIONS

ACTIVATION CHAMBER	AC	DIGESTER COVER, GAS HOLDER	DCG	MEMBRANE	MFM	SCRUBBER	SCU	VALVE, KNIFE GATE	VKG
ADJUSTABLE FREQUENCY DRIVE	AFD	DIGESTER COVER, MEMBRANE	DCM	MEMBRANE, MICROFILTRATION	MBMF	SCUM COLLECTOR	SMC	VALVE, MATERIAL HANDLING ROTARY	VMR
AERATOR, COARSE BUBBLE DIFFUSED	ACD	DIGESTER, AEROBIC	DGE	MEMBRANE, NANOFILTRATION	MBNF	SCUM WEIR - ROTATING	SCW	VALVE, MUD	VMD
AERATOR, FINE PORE DIFFUSED	AEFD	DIGESTER, ANAEROBIC PRIMARY	DGAP	MEMBRANE, REVERSE OSMOSIS	MBRO	SEPARATOR	SEP	VALVE, PILOT	PTV
AERATOR, FLOATING SURFACE	AFS	DIGESTER, ANAEROBIC SECONDARY	DGAS	MEMBRANE, ULTRAFILTRATION	MBUF	SIGHT GLASS - TALL	SGT	VALVE, PINCH	VPN
AERATOR, SURFACE	AES	DISINFECTION UNIT, UV	DSUV	MIXER, CARBON	MXC	SIGHTGLASS	SG	VALVE, PISTON OPERATED	VPO
AFTERCOOLER	AFC	DISSOLVED AIR FLOTATION THICKENER	DAF	MIXER, FLOCCULATION	FLM	SILENCER	SIL	VALVE, PLUG	VPG
AIR DRYER	AD	DUST COLLECTOR	DUC	MIXER, IN-LINE	MXI	SLUDGE COLLECTOR, CIRCULAR	SLC	VALVE, PRESSURE REDUCING	VPR
AIR FILTER	AF	ELECTRICAL EQUIPMENT, GENERAL	EQPE	MIXER, PUGMILL	MXPG	SLUDGE COLLECTOR, FLOCCULATING-CLARIFYING	SFC	VALVE, PRESSURE REGULATING	VPC
AIR RECEIVER	AR	EMERGENCY EYE WASH	EEW	MIXER, RAPID	MXR	SLUDGE COLLECTOR, SECONDARY CLARIFIERS	SCS	VALVE, PRESSURE RELIEF	VSP
AIR SEPARATOR	AS	EMERGENCY SHOWER	ES	MIXER, STATIC	MXS	SLUDGE COLLECTOR, SOLIDS CONTACT	SSC	VALVE, PRESSURE/VACUUM RELIEF	VSPV
AIR STRIPPER	AST	EMERGENCY SHOWER & EYEWASH	ESE	MIXER, SUBMERSIBLE PROPELLER	MXP	SLUDGE COLLECTOR, STRAIGHT LINE	SLCS	VALVE, PROCESS	VP
BACKFLOW PREVENTER	BFP	ENGINE GENERATOR (BACKUP POWER)	EG	OVERFLOW ROOF DRAIN	ORD	SLUDGE GRINDER	SLG	VALVE, RESILIENT SEATED GATE	VGR
BASIN, AERATION	BSNA	EQUIPMENT, GENERAL OR UNSPECIFIED	EQPT	OZONE DESTRUCT UNIT	ODU	SLUDGE SCREEN-INLINE	SCRI	VALVE, SAFETY	VS
BASIN, ANOXIC	BSNX	EVAPORATOR	EV	OZONE GENERATOR	OGEN	SOLIDS BLENDER-INLINE	SBL	VALVE, SURGE ARRESTOR	VSA
BASIN, BNR	BNR	EXPANSION CHAMBER	EXC	PARTICLE COUNTER	PCN	STOP PLATE	STPL	VALVE, SLEEVE	VSLV
BASIN, CHLORINE CONTACT	BSNC	FAN SUPPLY OR EXHAUST	FAN	PELLETIZER	PLT	STRAINER	STR	VALVE, SOLENOID	VSL
BASIN, OZONE CONTACT	BSNO	FILTER SEPARATOR	FTSP	PIPE	PIPE	STRAINER - BASKET TYPE	STRB	VALVE, THERMAL SHUTOFF	VTS
BELT FILTER PRESS	BFPS	FILTER, CARTRIDGE TYPE	FLC	PLATE SETTLER	PSE	STRAINER - Y TYPE	STRY	VALVE, THREE WAY	VTW
BIN (STORAGE - ALL TYPES)	B	FILTER, UNDERDRAINS AND MEDIA	FLT	POLYMER RING	PIR	SURGE CHAMBER	SRCH	VALVE, VACUUM BREAKER	VVB
BIN ACTIVATOR	BA	FILTER. SURFACE WASH EQUIPMENT	FSW	POWER SUPPLY UNIT	PSU	TANK, ABOVE GROUND STORAGE	TSA	VALVE, VACUUM RELIEF	VSV
BLOWER, CENTRIFUGAL	BLC	FITTING, MISCELLANEOUS	FTTNG	PULSATION DAMPNER	PD	TANK, AMMONIA STORAGE	TCN	VALVE, V-PORT BALL	VBP
BLOWER, POSITIVE DISPLACEMENT	BL	FLAME ARRESTER	FAR	PUMP, AIR DIAPHRAGM	PAD	TANK, CRYOGENIC STORAGE	TCR	VAPORIZER	VAP
BOILER	BLR	FLAME CHECK	FC	PUMP, CENTRIFUGAL	PCL	TANK, DOUBLE WALL	DWT	WEIR, CIPOLETTI	WC
BUILDING SERVICES EQUIPMENT	EQPB	FLOCCULATOR, HORIZONTAL	FLCH	PUMP, DOUBLE DIAPHRAGM	PDD	TANK, ELEVATED STORAGE	TSE	WEIR, RECTANGULAR	WR
CALIBRATION COLUMN	CCLM	FLOCCULATOR, VERTICAL	FLCV	PUMP, DIAPHRAGM METERING	PDM	TANK, EXPANSION	TX	WEIR, V-NOTCH	WV
CENTRIFUGE	CFG	FLOOR DRAIN	FD	PUMP, HEATING WATER	PHW	TANK, FRP CHEMICAL STORAGE	TCF	WELL, HORIZONTAL COLLECTOR	WLHC
CHEMICAL FEEDER	CHF	FLOW SPLITTER	FS	PUMP, HORIZONTAL END SUCTION	PHE	TANK, GENERAL OR UNSPECIFIED	TNK	WELL, VERTICAL	WLV
CHLORINE GAS SCRUBBER	CGS	FLUME, PARSHALL	FE	PUMP, HORIZONTAL SPLIT CASE	PSC	TANK, PE CHEMICAL STORAGE	TCP		
CLARIFIER, PRIMARY	PCLR	FOAM SEPARATOR	FMSP	PUMP, PERISTALTIC	PPS	TANK, STEEL CHEMICAL STORAGE	TCS		
CLARIFIER, SECONDARY	SCLR	GAS CYLINDER	CYG	PUMP, PLUNGER	PPL	TANK, STEEL WATER STORAGE	TSW		
CLASSIFIER, GRIT	CGR	GAS FEEDER	GFD	PUMP, PROGRESSING CAVITY	PPC	TRAP, DRIP	TRP		
CLEARWELL	CW	GAS FLARE	GF	PUMP, SCREW ENCLOSED	PSEN	TRAP, SEDIMENT	TRPS		
COMPRESSOR	CMP	GAS WATER HEATER	GWH	PUMP, SCREW OPEN	PSO	TURBIDIMETER	TB		
COMPRESSOR, BASE MOUNTED	CMB	GATE, FLAP	GFL	PUMP, SUBMERSIBLE	PSM	UNINTERRUPTABLE POWER SUPPLY	UPS		
COMPRESSOR, ROTARY SCREW	CMR	GATE, SLIDE	GSD	PUMP, SUBMERSIBLE CHOPPER	PCH	VACUUM REGULATOR	VRG		
CONTAINER, PROCESS	CTR	GATE, SLUICE	GSC	PUMP, SUBMERSIBLE SUMP	PSS	VALVE, AIR RELEASE	VR		
CONVEYOR, BELT	COB	GATE, WEIR	G	PUMP, SUMP	PSP	VALVE, AIR-VACUUM	VRAV		
CONVEYOR, SCREW	COS	GRAVITY BELT THICKENER	GBT	PUMP, UNSPECIFIED TYPE	P	VALVE, ANGLE	VAG		
COVER, ALUMINUM DOME BASIN	CFA	GRAVITY THICKENER	GVT	PUMP, VERTICAL DIFFUSION VANE	PVD	VALVE, AWWA BALL	VBL		
COVER, FIXED DIGESTER	CFD	GRINDER	GRD	PUMP, VERTICAL END SUCTION	PVE	VALVE, AWWA BUTTERFLY	VBF		
COVER, FLOATING DIGESTER	CFL	GRIT BASIN, AERATED OR VORTEX TYPE	GRB	PUMP, VERTICAL WET PIT	PVW	VALVE, BALL MISCELLANEOUS	VBM		
CRANE	CR	GRIT EQUIPMENT, FORCED VORTEX	GRV	RESERVOIR	RSV	VALVE, CHECK	VCK		
CRANE, GANTRY	CRG	HEAT EXCHANGER	HEX	RESIDUAL COLLECTOR	RCO	VALVE, CONE	VCN		
CRANE, JIB	CRJ	HOIST, CHAIN	HSC	ROTAMETER	RM	VALVE, DIAPHRAGM OPERATED	VDG		
CRANE, PORTABLE GANTRY	CRP	HOIST, WIRE ROPE	HSE	RUPTURE DISK	RD	VALVE, DOUBLE DISC GATE	VGD		
CRANE, TRAVELLING BRIDGE	CRT	HYDRANT, FIRE	HYDF	SAMPLER	SAMP	VALVE, ECCENTRIC PLUG	VPL		
CYLINDER, CHLORINE	CYL	HYDRANT, WALL	HYDW	SCALE	SC	VALVE, EXPLOSION RELIEF	VER		
DEWATERING SCREW	DWS	HYDROCYCLONE	HYC	SCREEN, MECHANICALLY CLEANED BAR	SCRA	VALVE, GATE	VG		
DIAPHRAGM SEAL	DPS	INJECTOR, CHEMICAL	INJ	SCREEN, MECHANICALLY CLEANED DRUM	SCRD	VALVE, GENERAL OR UNSPECIFIED	V		
DIFFUSER	DIF	LIME SLAKER	LS	SCREEN, STEP	SCRS	VALVE, GLOBE	VGL		
DIFFUSER BANK	DFB			SCREEN, TRAVELLING WATER	SCT	VALVE, INDUSTRIAL BUTTERFLY	VBI		

PRELIMINARY - NOT FOR CONSTRUCTION

DATE	REVISIONS AND RECORD OF ISSUE	NO.	BY	CK	APP

50.3081 - RWPS
I-01-003.dwg
SAVED: VANIEA3, 12/18/2014 4:21:25 PM
PLOTTED: 3/5/2015 1:36:52 PM
USER: PWADMIN
DWG VER: 1000
XREF1: BORDER.dwg
XREF2:
XREF3:
XREF4:

BLACK & VEATCH
Building a world of difference.
Black & Veatch Corporation
Virginia Beach, VA

BEDFORD REGIONAL WATER AUTHORITY
SMITH MOUNTAIN LAKE WTP &
RAW WATER PUMPING STATION / INTAKE

INSTRUMENTATION
RAW WATER PUMP STATION
LEGEND AND ABBREVIATIONS - SHEET 3 OF 3

DESIGNED:
DETAILED:
CHECKED:
APPROVED:
DATE: DECEMBER 2014

0 1/2 1
IF THIS BAR DOES NOT MEASURE 1" THEN DRAWING IS NOT TO FULL SCALE

PROJECT NO.
182262

I-01-003
SHEET
OF

FD7000_PW
D7000

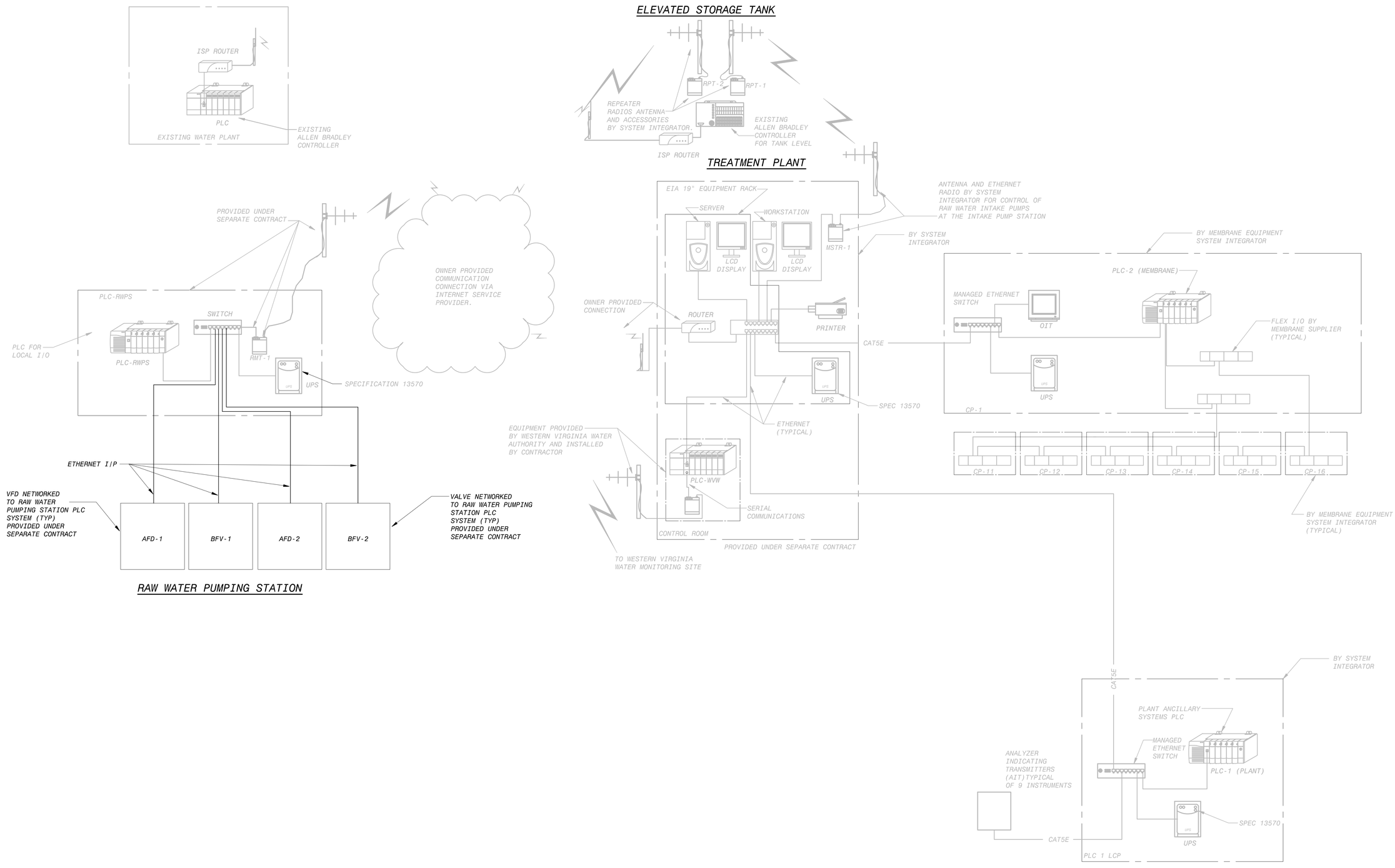

PRELIMINARY - NOT FOR CONSTRUCTION

NO.	BY	CK	APP	REVISIONS AND RECORD OF ISSUE	DATE

50.3091 - RWPS
I-01-004.dwg
SAVED: BROS2608, 2/16/2015 3:57:20 PM
PLOTTED: 3/5/2015 1:37:24 PM
USER: PWADMIN
DWG VER: 1000
XREF1:
XREF2:
XREF3:
XREF4:

BLACK & VEATCH
Building a world of difference.
Black & Veatch Corporation
Virginia Beach, VA

BEDFORD REGIONAL WATER AUTHORITY
SMITH MOUNTAIN LAKE WTP &
RAW WATER PUMPING STATION / INTAKE

INSTRUMENTATION
RAW WATER PUMP STATION
CONTROL BLOCK DIAGRAM

DESIGNED:
DETAILED:
CHECKED:
APPROVED:
DATE: DECEMBER 2014

0 1/2 1
IF THIS BAR DOES NOT MEASURE 1" THEN DRAWING IS NOT TO FULL SCALE

PROJECT NO.
182262

I-01-004
SHEET
OF

FD7000
D7000

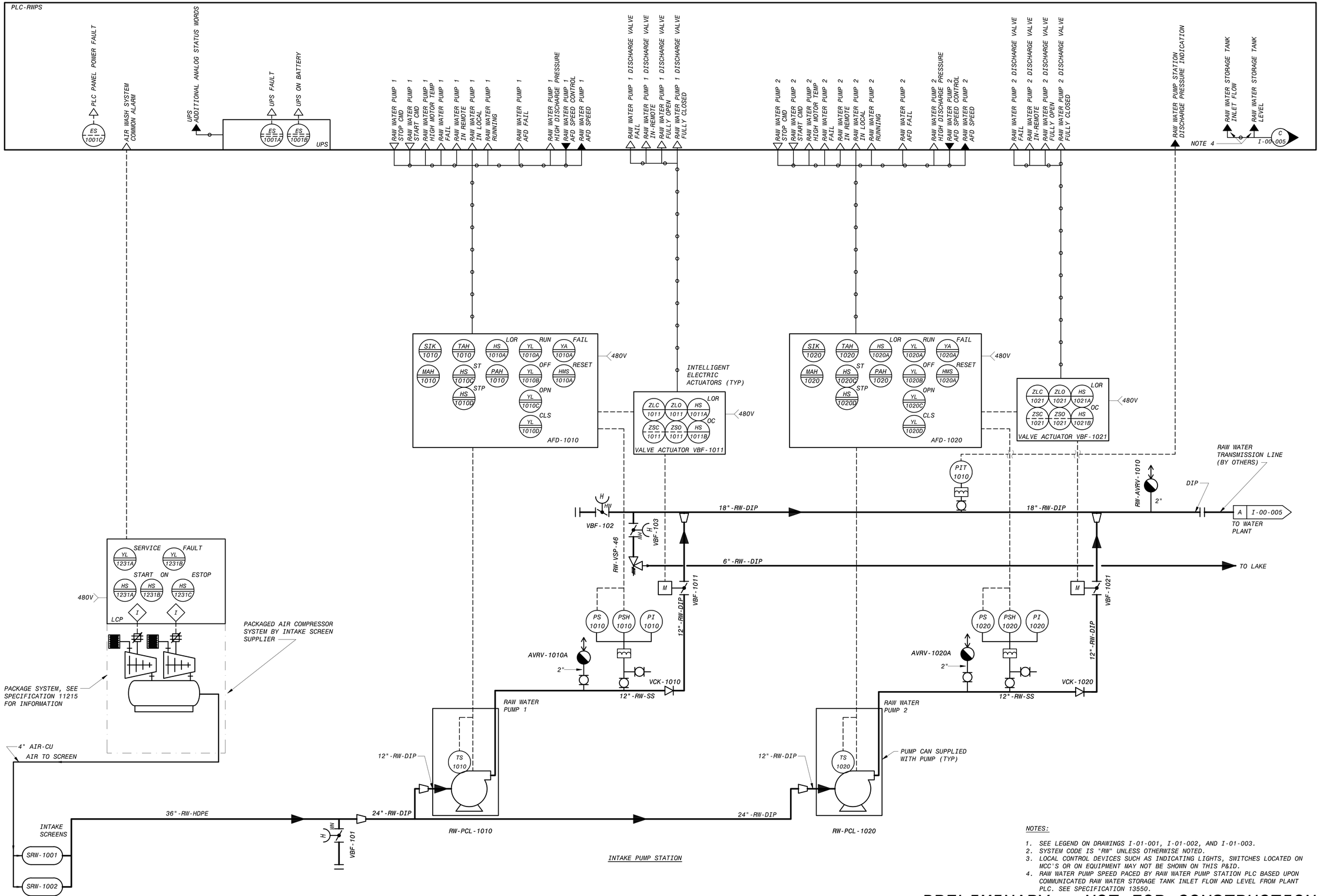

NOTES:

1. SEE LEGEND ON DRAWINGS I-01-001, I-01-002, AND I-01-003.
2. SYSTEM CODE IS "RW" UNLESS OTHERWISE NOTED.
3. LOCAL CONTROL DEVICES SUCH AS INDICATING LIGHTS, SWITCHES LOCATED ON MCC'S OR ON EQUIPMENT MAY NOT BE SHOWN ON THIS P&ID.
4. RAW WATER PUMP SPEED PACED BY RAW WATER PUMP STATION PLC BASED UPON COMMUNICATED RAW WATER STORAGE TANK INLET FLOW AND LEVEL FROM PLANT PLC. SEE SPECIFICATION 13550.

PRELIMINARY - NOT FOR CONSTRUCTION

NO.	BY	CK	APP	REVISIONS AND RECORD OF ISSUE	DATE
F				GENERAL REVISIONS	08/11/14
E				DRAWING UPDATES	06/27/14
D				DRAWING UPDATES	06/05/14
B				DRAWING UPDATES	05/27/14

50.3081 - RWPS
I-01-005.dwg
SAVED: BROX3608, 3/5/2015 2:16:30 PM
PLOTTED: 3/5/2015 1:37:57 PM
USER: PWADMIN
DWG VER: B-REV
XREF1: BORDER.dwg
XREF2:
XREF3:
XREF4:

BLACK & VEATCH
Building a world of difference.
Black & Veatch Corporation
Virginia Beach, VA

BEDFORD REGIONAL WATER AUTHORITY
SMITH MOUNTAIN LAKE WTP &
RAW WATER PUMPING STATION / INTAKE

INSTRUMENTATION
RAW WATER PUMP STATION
PUMP STATION - P&ID

DESIGNED: LJB
DETAILED: LJB
CHECKED:
APPROVED:
DATE: DECEMBER 2014

0 1/2 1
IF THIS BAR DOES NOT MEASURE 1" THEN DRAWING IS NOT TO FULL SCALE

PROJECT NO.
182262

I-01-005
SHEET
OF

FD7000_PW
D7000

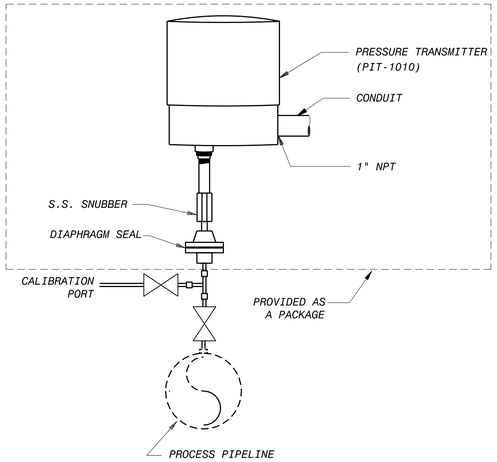

PRESSURE TRANSMITTER
WITH DIAPHRAGM SEAL
NO SCALE
1

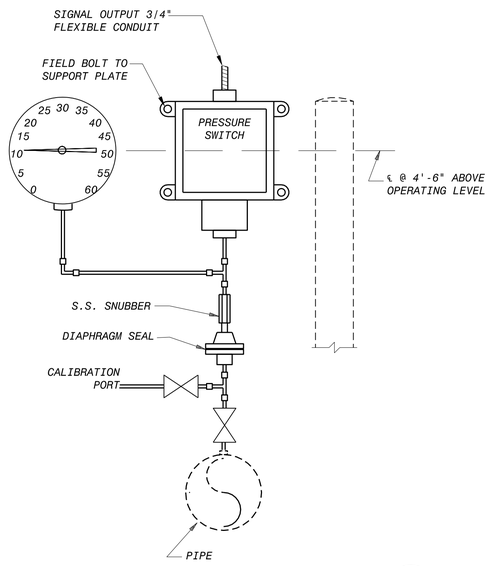

PRESSURE SWITCH, GAUGE
WITH DIAPHRAGM SEAL
NO SCALE
2

TYPICAL FOR: PSH-1010, PSH-1020

PRELIMINARY - NOT FOR CONSTRUCTION

DATE	REVISIONS AND RECORD OF ISSUE	NO.	BY	CK	APP
50.3081 - RWPS					
I-01-006.dwg		XREF1:BORDER.dwg			
SAVED:BRO52608, 3/2/2015 9:38:38 AM		XREF2:			
PLOTTED:KOE49353, 5/16/2014 12:28		XREF3:			
USER:KOE49353	DWG VER:1000	XREF4:			

BLACK & VEATCH
Building a world of difference.
Black & Veatch Corporation
Virginia Beach, VA

BEDFORD REGIONAL WATER AUTHORITY
SMITH MOUNTAIN LAKE WTP &
RAW WATER PUMPING STATION / INTAKE

INSTRUMENTATION
INSTALLATION DETAILS

DESIGNED: TRK
DETAILED: TRK
CHECKED:
APPROVED:
DATE: DECEMBER 2014

0 1/2 1
IF THIS BAR DOES NOT MEASURE 1" THEN DRAWING IS NOT TO FULL SCALE

PROJECT NO.
182262

I-01-006
SHEET
OF

FD7000_PW
D7000

ONE-LINE DIAGRAM LEGEND

1500KVA 2.4KVD-480Y/277 3Ø, 60HZ	TRANSFORMER WITH PRIMARY AND SECONDARY VOLTAGE, AND KVA RATING AS NOTED
20 — 22: 3#8,#10G,2"	CIRCUIT NO.22 WITH #8 INSULATED CONDUCTORS, 1#10 BARE GROUND WIRE ALL IN 2" CONDUIT TO 20 HP MOTOR
15 — AUXILIARY ITEMS MAY NOT BE SHOWN COMPLETELY	ONE-LINE SHOWING POWER AND CONTROL TO A PACKAGE UNIT, AS FOR EXAMPLE A STEAM GENERATOR OR AN AIR HANDLING UNIT, SHALL IMPLY THAT ANY AND ALL ASSOCIATED EQUIPMENT SHALL ALSO BE INSTALLED AND WIRED AS REQUIRED BY THE EQUIPMENT FURNISHED.
	INDICATES THAT ALL OR PART OF CIRCUIT MAY BE ROUTED IN DUCT BANK OR UNDERGROUND. CONDUIT SIZE SHOWN ON ONE-LINE IS ABOVE GROUND AND/OR INSIDE OF STRUCTURE. SEE DUCT BANK SCHEDULE AND SECTIONS FOR CONDUIT SIZE OF UNDERGAOUND PORTION OF CIRCUIT.
	HIGH VOLTAGE DRAWOUT AIR OR VACUUM CIRCUIT BREAKER
3P-20	LOW VOLTAGE AIR CIRCUIT BREAKER, 3 POLE, 20 AMPERE
S4	SIZE 4 COMBINATION MAGNETIC MOTOR STARTER
	LOW VOLTAGE DRAWOUT AIR CIRCUIT BREAKER
	HIGH VOLTAGE DRAWOUT CONTACTOR
	FUSE AND DISCONNECT SWITCH
S2	SIZE 2 COMBINATION MAGNETIC MOTOR STARTER, REVERSING OR 2 SPEED
S1	SIZE 1 COMBINATION REDUCED VOLTAGE STARTER
	POTENTIAL TRANSFORMER
	CURRENT TRANSFORMER

CONDUIT & WIRING INSTALLATION LEGEND

	CONDUIT EXPOSED
	CONDUIT CONCEALED
	CONDUIT TURNING UP. CONDUIT TURNING DOWN.
	CONDUIT PLUGGED FLUSH. CONDUIT CAPPED.
L2-5	TYPICAL FOR HOME RUN TO BE ROUTED TO LIGHTING PANEL L2 & CONNECTED TO CIRCUIT #5 (MINIMUM NO. 12 AWG CONDUCTORS AND 3/4" CONDUIT)
A	LIGHTING FIXTURE. REFER TO NUMBER OR LETTER IN FIXTURE SCHEDULE
11	FLUORESCENT FIXTURE. REFER TO NUMBER OR LETTER IN FIXTURE SCHEDULE.
LP1-3	RECEPTACLE POWERED FROM LIGHTING PANEL LP1, CIRCUIT 3
A LP2-2	LIGHTING FIXTURE POWERED FROM LIGHTING PANEL LP2, CIRCUIT 2 (NON-SWITCHED)
LPA-4 A 11	LIGHTING FIXTURE POWERED FROM LIGHTING PANEL LPA, CIRCUIT 4, VIA SWITCH A
E	UNDERGROUND CONCRETE ENCASED ELECTRICAL DUCT BANK
	UNDERGROUND CONCRETE ENCASED ELECTRICAL BANK ROUTED BENEATH SLAB-ON-GRADE
EE	DIRECT BURIED CONDUIT
	GROUND CONDUCTOR

SCHEMATIC SYMBOLS

	WIRE CONNECTION POINT
	EXTERNAL CONNECTION POINT
	NORMALLY OPEN CONTACT
	NORMALLY CLOSED CONTACT
	STARTER, CONTACTOR OR RELAY COIL
	NORMALLY OPEN PUSH BUTTON
	NORMALLY CLOSED PUSH BUTTON
	MAINTAINED PUSH BUTTON
	NORMALLY CLOSED GEARED LIMIT SWITCH
	NORMALLY OPEN GEARED LIMIT SWITCH
	INDICATING LIGHT
	FUSE
	POTENTIOMETER
	CAPACITOR
	DIODE
	RESISTOR
	CONTROL POWER TRANSFORMER
	SWITCH
MS	MANUAL STARTER
OL	OVERLOAD
	ELECTRODE
	FLOAT SWITCH (CLOSING ON RISING LEVEL)
	FLOAT SWITCH (OPENING ON RISING LEVEL)
P	PRESSURE SWITCH (CLOSING ON RISING PRESSURE)
P	PRESSURE SWITCH (OPENING ON RISING PRESSURE)
V	VACUUM SWITCH (CLOSING ON INCREASING VACUUM)
V	VACUUM SWITCH OPENING ON INCREASING VACUUM)
	TEMPERATURE SWITCH (CLOSING ON RISING TEMPERATURE)
	TEMPERATURE SWITCH (OPENING ON RISING TEMPERATURE)
	FLOW ACTUATED SWITCH (CLOSING ON INCREASE IN FLOW)
	FLOW ACTUATED SWITCH (OPENING ON INCREASE IN FLOW)
	ON TIME DELAY CONTACT (NORMALLY OPEN, WHEN THE COIL IS ENERGIZED THE CONTACT WILL CLOSE AFTER A TIME DELAY)
	ON TIME DELAY CONTACT (NORMALLY CLOSED, WHEN THE COIL IS ENGERGIZED THE CONTACT WILL OPEN AFTER A TIME DELAY)
	OFF TIME DELAY CONTACT (NORMALLY OPEN, WHEN THE COIL IS DE-ENERGIZED THE CONTACT WILL OPEN AFTER A TIME DELAY)
	OFF TIME DELAY CONTACT (NORMALLY CLOSED, WHEN THE COIL IS DE-ENERGIZED THE CONTACT WILL CLOSE AFTER A TIME DELAY)
	TORQUE SWITCH (NORMALLY OPEN)
	TORQUE SWITCH (NORMALLY CLOSED)
	LIMIT SWITCH (NORMALLY OPEN)
	LIMIT SWITCH (NORMALLY OPEN, HELD CLOSED)
	LIMIT SWITCH (NORMALLY CLOSED)
	LIMIT SWITCH (NORMALLY CLOSED, HELD OPEN)
	DIFFERENTIAL PRESSURE SWITCH (NORMALLY OPEN, CLOSING ON INCREASING DIFF.)
	DIFFERENTIAL PRESSURE SWITCH (NORMALLY CLOSED, OPENING ON INCREASING DIFF.)

MISCELLANEOUS SYMBOLS

	BELL
	HORN
T	THERMOSTAT
J	JUNCTION BOX
	GROUND ROD
	GROUND ROD WITH TEST WELL
	GROUND CONNECTION
	DISCONNECT SWITCH
	COMBINATION STARTER
	POWER PANEL
	LIGHTING PANEL
	MISCELLANEOUS PANEL
	LIGHTING CONTACTOR

COMMUNICATION SYMBOLS

	HORN SPEAKER
	DUAL HORN SPEAKER
	WALL MOUNTED CONE SPEAKER
SK	CEILING MOUNTED CONE SPEAKER
WS WP	WALL STATION
DS	DESK TOP STATION
RH WP	REMOTE HANDSET
SA	SPEAKER AMPLIFIER
LB	LINE BALANCE ASSEMBLY
TG	TONE GENERATOR
TI	TELEPHONE INTERFACE
IA	INTERFACE AMPLIFIER
IJB	INTERCOM JUNCTION BOX

NOTE: WP=WEATHERPROOF
H=HAZARDOUS AREA

SWITCH & OUTLET SYMBOLS

S	SINGLE POLE SWITCH	S_{PL}	SWITCH WITH PILOT LIGHT		DUPLEX RECEPTACLE 120 VOLT		120 VOLT DUPLEX RECEPTACLE (UPS)
S_2	TWO POLE SWITCH	S_{KO}	KEY OPERATED SWITCH		SIMPLEX RECEPTACLE		DUPLEX FLOOR OUTLET
S_3	THREE-WAY SWITCH	S_{XP}	EXPLOSION PROOF SWITCH		RANGE RECEPTACLE		TELEPHONE OUTLET
S_4	FOUR-WAY SWITCH	S_{DM}	DIMMER SWITCH		TWISTLOCK RECEPTACLE		TELEPHONE FLOOR OUTLET
S_M^{C1}	MOMENTARY SWITCH CONTROLLING CONTACTOR C1	S_{3A}	THREE-WAY SWITCH CONTROLLING LIGHTS WITH "A" DESIGNATION	30	240V, 1Ø RECEPTACLE, TYPICAL AMPERE RATING NOTED	CX	COAXIAL CABLE OUTLET
S_{WP}	WEATHERPROOF SWITCH			60	480V, 3Ø WELDING RECEPTACLE, TYPICAL AMPERE RATING NOTED		

ABBREVIATIONS

A	AMBER, AMPERE, ALARM
AC	ALTERNATING CURRENT
ACB	AIR CIRCUIT BREAKER
AF	AMPERE FRAME
AFD	ADJUSTABLE FREQUENCY DRIVE
AM	AMMETER
ANN	ANNUNCIATOR
AR	ALARM RELAY
AS	AMMETER SWITCH
AT	AMPERE TRIP
AWG	AMERICAN WIRE GAGE
BC	BATTERY CHARGER
BR	BRAKE
BT	BEARING TEMPERATURE
C	CLOSE, COUNTER OR CONTACTOR
CAP	CAPACITOR
CB	CIRCUIT BREAKER
CB"A"	CIRCUIT BREAKER AUXILIARY CONTACT (OPEN WHEN BREAKER IS OPEN OR TRIPPED CLOSED WHEN BREAKER IS CLOSED)
CB"B"	CIRCUIT BREAKER AUXILIARY CONTACT (CLOSED WHEN BREAKER IS OPEN OR TRIPPED OPEN WHEN BREAKER IS CLOSED)
CD	CONTROL DAMPER
CI	CELL INTERLOCK
CKT	CIRCUIT
CL2	CHLORINE
COS	CABLE OPERATED SWITCH
CP	CONTROL PANEL
CPT	CONTROL POWER TRANSFORMER
CR	CURRENT OR CONTROL RELAY
CS	CONTROL STATION
CT	CYCLE TIMER OR CURRENT TRANSFORMER
CTC	CYCLE TIMER CLUTCH
CTM	CYCLE TIMER MOTOR
2/C	2 CONDUCTOR
4"C	4" CONDUIT
DC	DIRECT CURRENT
DI	DOOR INTERLOCK
DM	DAMPER MOTOR OR DEMAND METER
DPDT	DOUBLE POLE DOUBLE THROW
DPST	DOUBLE POLE SINGLE THROW
DPR	DIFFERENTIAL PRESSURE REGULATOR
DPS	DIFFERENTIAL PRESSURE SWITCH
DS	DISCONNECT SWITCH
DVLS	DISCHARGE VALVE LIMIT SWITCH
E	ELECTRIC OPERATOR FOR CONTROL DAMPER OR VALVE
EC	EMPTY CONDUIT
EL	ELEVATION OR EMERGENCY LIGHT
EMH	ELECTRICAL MANHOLE
ER	ELECTRODE RELAY
ES	END SWITCH
ETM	ELAPSED TIME METER
EX	EXISTING
F	FORWARD
FS	FLOW SWITCH
G	GREEN OR GROUND
GD	GROUND DETECTOR
GEN	GENERATOR
GFI	GROUND FAULT INTERRUPTER
GLS	GEARED LIMIT SWITCH
#8G	#8 GROUND WIRE
H	HIGH OR HUMIDISTAT
HC	HOT CIRCUIT
HH	HANDHOLE
HMT	HIGH MOTOR TEMPERATURE
HOA	HAND-OFF-AUTO
HOR	HAND-OFF-REMOTE
HP	HORSEPOWER
HWCO	HIGH WATER CUTOFF
HZ	HERTZ (CYCLE)
I/O	INPUT/OUTPUT
INST	INSTANTANEOUS
J	JUNCTION BOX
JB	JUNCTION BOX
K	KEY INTERLOCK
KCMIL	THOUSAND CIRCULAR MIL
KV	KILOVOLT
KVA	KILOVOLT AMPERE
KVAR	KILOVAR
KW	KILOWATT
KWH	KILOWATT HOUR
L	LOW, LEVEL
LA	LIGHTNING ARRESTER
LAN	LOCAL AREA NETWORK
LC	LIGHTING CONTACTOR
LOA	LOCAL-OFF-AUTO
LOR	LOCAL-OFF-REMOTE
LP	LIGHTING PANEL
LS	LIMIT OR LEVEL SWITCH
LWCO	LOW WATER CUTOFF
1-1PR#16S	ONE, SINGLE PAIR, TWISTED, SHIELDED #16 CABLE
3-7/C#14	THREE, SINGLE, SEVEN CONDUCTOR #14 MULTICONDUCTOR CONTROL CABLES
M	MAGNETIC MOTOR STARTER
MA	MILLIAMPERE
MCB	MAIN CIRCUIT BREAKER
MCC	MOTOR CONTROL CENTER
MCLU	MOTOR CONTROL LINEUP
MD	MOISTURE DETECTOR
MFM	MAGNETIC FLOW METER
MFR	MANUFACTURER
MH	MANHOLE OR MOUNTING HEIGHT
MOV	MOTOR OPERATED VALVE
MPR	MOTOR PROTECTION RELAY
MS	MANUAL MOTOR STARTER
MSH	MOTOR SPACE HEATER
MV	MILLIVOLT
MVA	MEGA VOLT AMPERE
N	NEUTRAL
NC	NORMALLY CLOSED
NO	NORMALLY OPEN, NUMBER
O	OPEN
OCB	OIL CIRCUIT BREAKER
OL	OVERLOAD
OOA	ON-OFF-AUTO
OOR	ON-OFF-REMOTE
P	PRIMARY
PCS	PLANT CONTROL SYSTEM
PB	PUSH BUTTON OR PULL BOX
PF	POWER FACTOR METER
PH	PHASE, CHEMICAL TERM
PLC	PROGRAMMABLE LOGIC CONTROLLER
PP	POWER PANEL
PRS	PROXIMITY SWITCH
PS	PRESSURE SWITCH
PT	POTENTIAL TRANSFORMER, PROGRAM TIMER
2P	2 POLE
R	RED, RAISE, RELAY OR REVERSE
RECP	RECEPTACLE
RES	RESISTOR
RT	REPEATING TIMER
RTD	RESISTANCE TYPE TEMP DETECTOR
RTU	REMOTE TERMINAL UNIT
RVSS	REDUCED VOLTAGE SOLID STATE STARTER
S2	SIZE 2 STARTER
SCADA	SUPERVISORY CONTROL AND DATA ACQUISITION
SH	SPACE HEATER
SN	SOLID NEUTRAL
SO	SOLENOID OILER
SP	SINGLE POLE
SPDT	SINGLE POLE DOUBLE THROW
SPST	SINGLE POLE SINGLE THROW
SS	SELECTOR SWITCH
SSS	SOLID STATE STARTER
SUPV	SUPERVISORY CONTROL
SV	SOLENOID VALVE
SWB	SWITCHBOARD
SWGR	SWITCHGEAR
T	THERMOSTAT, TIMER, OR TOTALIZER
TACH	TACHOMETER
TB	TERMINAL BLOCK
TC	TIMER CLUTCH
TD	TIME DELAY RELAY
TEMP	TEMPERATURE
TM	TIMER MOTOR
TQ	TORQUE
TS	TEMPERATURE SWITCH
TTB	TELEPHONE TERMINAL BOX
UG	UNDERGROUND
UV	UNDER VOLTAGE
UPS	UNINTERRUPTIBLE POWER SUPPLY
V	VOLTS
VA	VOLT AMPERE
VAR	VARMETER
VLS	VALVE LIMIT SWITCH
VM	VOLTMETER
VPI	VALVE POSITION INDICATOR
VS	VOLTMETER SWITCH
W	WHITE OR WATTS
WH	WATTHOUR METER
WM	WATT METER
WP	WEATHERPROOF
WPI	WEATHERPROOF IN-USE
X	AUXILIARY RELAY
XFMR	TRANSFORMER
XP	EXPLOSION PROOF
Y	YELLOW
Z	AUXILIARY RELAY
ZS	POSITION SWITCH
ZSS	ZERO SPEED SWITCH

AREA DESIGNATIONS

THE SPECIAL AREA DESIGNATION BOXES, AS DEFINED BELOW, ARE LOCATED ON THE PLAN DRAWINGS TO DEFINE ELECTRICAL INSTALLATION REQUIREMENTS. DESIGNATION BOXES ARE LOCATED WITHIN ROOM OR BELOW ROOM NUMBER. ALL INDOOR AREAS NOT INDICATED OTHERWISE ARE AREA TYPE 1 AND MINIMUM NEMA TYPE 1 ENCLOSURES.

AREA TYPE 1A	CORROSIVE CHEMICAL FEED AND STORAGE ROOMS. CONDUIT SYSTEM SHALL BE EXPOSED PVC RIGID NON-METALLIC CONDUIT WITH PVC FITTINGS, BOXES, AND ACCESSORIES.
AREA TYPE 4	INDOOR WET LOCATIONS SUCH AS VAULTS, HOSEDOWN AREAS, BASEMENTS, ETC. MINIMUM NEMA TYPE 4 ENCLOSURE FOR EQUIPMENT AND GASKETED FITTINGS IN A CONDUIT SYSTEM.
AREA TYPE 7A	CLASS I, DIVISION 1 AREA AS DEFINED BY NEC. ALL EQUIPMENT AND CONDUIT SYSTEMS SHALL BE RATED FOR USE IN THIS AREA.
AREA TYPE 7B	CLASS I, DIVISION 2, GROUP C AND D (METHANE, GASOLINE) AS DEFINED BY NEC. EQUIPMENT AND CONDUITS SYSTEMS SHALL BE RATED FOR USE IN THIS AREA.
AREA TYPE 12	INDOOR, DRY, DIRTY AREA. REQUIRES MINIMUM NEMA TYPE 12 GASKETED ENCLOSURES FOR ALL EQUIPMENT AND GASKETED FITTINGS IN CONDUIT SYSTEMS.

GENERAL REQUIREMENTS

1. THE CONTRACTOR SHALL BE RESPONSIBLE FOR ROUTING ALL CONDUITS NOT SHOWN ON THE PLANS. THIS SHALL INCLUDE ALL CONDUITS SHOWN ON THE ONE-LINES AND HOME-RUNS SHOWN ON THE PLAN DRAWINGS. CONDUITS SHALL BE ROUTED AS DEFINED IN THE SPECIFICATIONS.
2. SPARE WIRES SHALL BE TAPED AND COILED.
3. IF EQUIPMENT SUPPLIED BY MANUFACTURER HAS A LARGER LOAD THAN VALUE SHOWN, THE CABLE CONDUIT AND ELECTRICAL EQUIPMENT SHALL BE ENLARGED, AS REQUIRED, TO ACCOMMODATE THE HIGHER VALUE.
4. THE CONTRACTOR SHALL BE RESPONSIBLE FOR FURNISHING PROPERLY SIZED STARTER OVERLOADS FOR EQUIPMENT FURNISHED.
5. LIGHTING AND RECEPTACLE CIRCUITS DESIGNATED ON THE FLOOR PLANS ARE NOT SHOWN ON THE ONE-LINES. CONDUCTORS FOR LIGHTING, RECEPTACLES, AND MISCELLANEOUS 120VAC CIRCUITS SHALL BE MINIMUM NO. 12 AWG. CONDUIT FOR LIGHTING, RECEPTACLES, AND MISCELLANEOUS 120VAC CIRCUITS SHALL BE MINIMUM 3/4".
6. IN AREAS WHERE THERE ARE OVERHEAD BRIDGE CRANES, HOISTS, ETC., NO CONDUITS SHALL BE RUN OVERHEAD THAT WILL INTERFERE WITH THE OPERATION OF THE EQUIPMENT.

GENERAL NOTES

1. SOLID LINES (————) INDICATE NEW WORK OR EQUIPMENT.
2. SCREENED LINES (————) INDICATE EXISTING WORK OR EQUIPMENT.
3. DASHED LINES (– – – – –) INDICATE FUTURE WORK OR EQUIPMENT.
4. REFER TO THE FOLLOWING DRAWING(S) FOR INSTRUMENTATION LEGEND: I-1, I-2, I-3
5. THIS IS A GENERAL LEGEND SHEET. SOME SYMBOLS AND ABBREVIATIONS MAY NOT BE UTILIZED ON THIS SPECIFIC PROJECT.
6. INFORMATION RELATED TO CIRCUIT IDENTIFICATION, WIRE & CONDUIT SIZES, AND ROUTING, IS ON THE FOLLOWING DRAWING TYPES.
   - A. ONE-LINE DIAGRAMS SHOW CIRCUIT IDENTIFICATION, WIRE QUANTITY AND SIZES, AND CONDUIT SIZE WITHIN STRUCTURES. ONE-LINE DIAGRAMS ALSO INDICATE ORIGIN AND DESTINATION OF CIRCUITS, AND IDENTIFY CIRCUITS ROUTED UNDERGROUND.
   - B. FOR CIRCUITS WITHOUT UNDERGROUND PORTIONS, BUILDING FLOOR PLANS SHOW LOCATION OF EQUIPMENT FOR DETERMINING CIRCUIT LENGTH WITHIN THE STRUCTURE. FOR CIRCUITS WITH UNDERGROUND PORTIONS, ANTICIPATED PENETRATION OF UNDERGROUND CONDUITS ARE SHOWN ON STRUCTURE PLANS FOR DETERMINING THE LENGTH OF THE IN-STRUCTURE PORTIONS OF CIRCUITS. BUILDING FLOOR PLANS MAY ALSO SHOW HOME RUNS FOR LIGHTING, RECEPTACLE, AND OTHER MISCELLANEOUS EQUIPMENT CIRCUITS.
   - C. SITE PLANS INDICATE THE GENERAL ROUTING OF UNDERGROUND CONDUITS AND DUCT BANKS. CIRCUITS ROUTED IN UNDERGROUND CONDUITS OR DUCT BANKS ARE INDICATED IN DUCT BANK SECTIONS REFERENCED ON THE SITE PLAN.
   - D. DUCT BANK SECTIONS AND SCHEDULES IDENTIFY CONDUIT SIZE CONDUIT MATERIAL, ARRANGEMENT OF THE UNDERGROUND CONDUITS, AND CIRCUITS ROUTED IN EACH UNDERGROUND CONDUIT.

PRELIMINARY - NOT FOR CONSTRUCTION

DATE	REVISIONS AND RECORD OF ISSUE	NO.	BY	CK	APP
5/16/14	ISSUED FOR PRICING	A	ZKO	SDS	

50.3040 - Electrical Drawings
E-00-001.dwg

SAVED: PAS128935, 12/30/2014 9:45:02 AM XREF1:
PLOTTED: 3/5/2015 5:16:34 AM XREF2:
USER: PHAMTN DWG VER: 1000 XREF3:
XREF4:

BLACK & VEATCH
Building a world of difference.
Black & Veatch Corporation
Virginia Beach, VA

BEDFORD REGIONAL WATER AUTHORITY
SMITH MOUNTAIN LAKE WTP &
RAW WATER PUMPING STATION / INTAKE

ELECTRICAL
LEGEND & ABBREVIATIONS

DESIGNED: ZKO
DETAILED: RTD
CHECKED:
APPROVED:
DATE:

0 1/2 1
IF THIS BAR DOES NOT MEASURE 1" THEN DRAWING IS NOT TO FULL SCALE

PROJECT NO. 182262

E-00-001
SHEET
OF

F07000
D7000

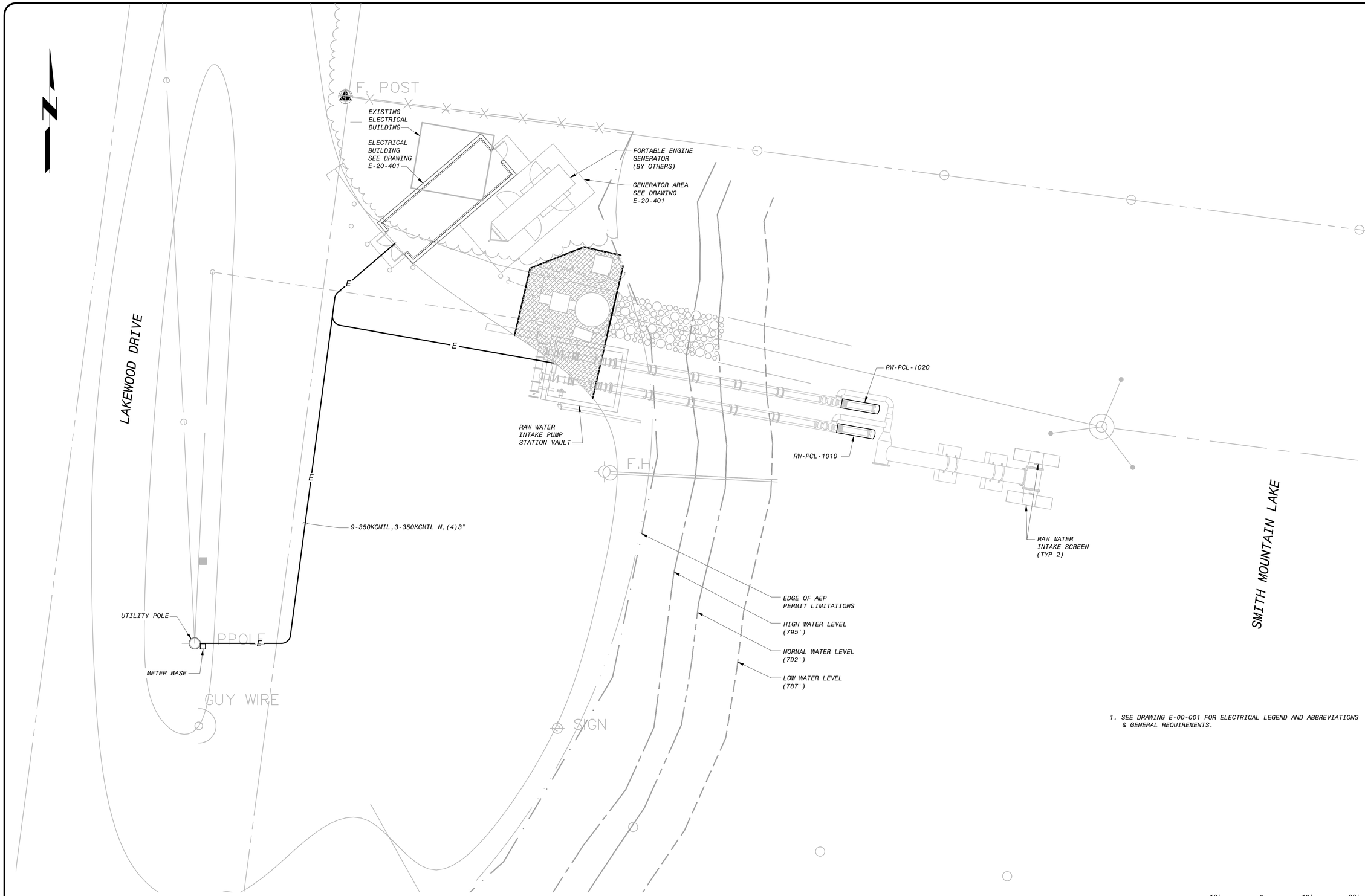

1. SEE DRAWING E-00-001 FOR ELECTRICAL LEGEND AND ABBREVIATIONS & GENERAL REQUIREMENTS.

RAW WATER PUMP STATION - ELECTRICAL SITE PLAN
1" = 10'-0"

10' 0 10' 20'
1"=10'

PRELIMINARY - NOT FOR CONSTRUCTION

DATE	REVISIONS AND RECORD OF ISSUE	NO.	BY	CK	APP

50.3040 - Electrical Drawings
E-20-101.dwg
SAVED: PAS12835, 3/4/2015 3:10:47 PM
PLOTTED: 3/5/2015 5:21:22 AM
USER: PHADMIN
DWG VER: 1000
XREF1:
XREF2:
XREF3:
XREF4:

BLACK & VEATCH
Building a world of difference.
Black & Veatch Corporation
Virginia Beach, VA

BEDFORD REGIONAL WATER AUTHORITY
SMITH MOUNTAIN LAKE WTP &
RAW WATER PUMPING STATION / INTAKE

ELECTRICAL
INTAKE STRUCTURE
SITE PLAN

DESIGNED:
DETAILED:
CHECKED:
APPROVED:
DATE:

0 1/2 1
IF THIS BAR DOES NOT MEASURE 1" THEN DRAWING IS NOT TO FULL SCALE

PROJECT NO.
182262

E-20-101
SHEET
OF

FD7000
D7000

12" 6" 0 1' 2' 3' 4' 5'

1/2"=1'-0"

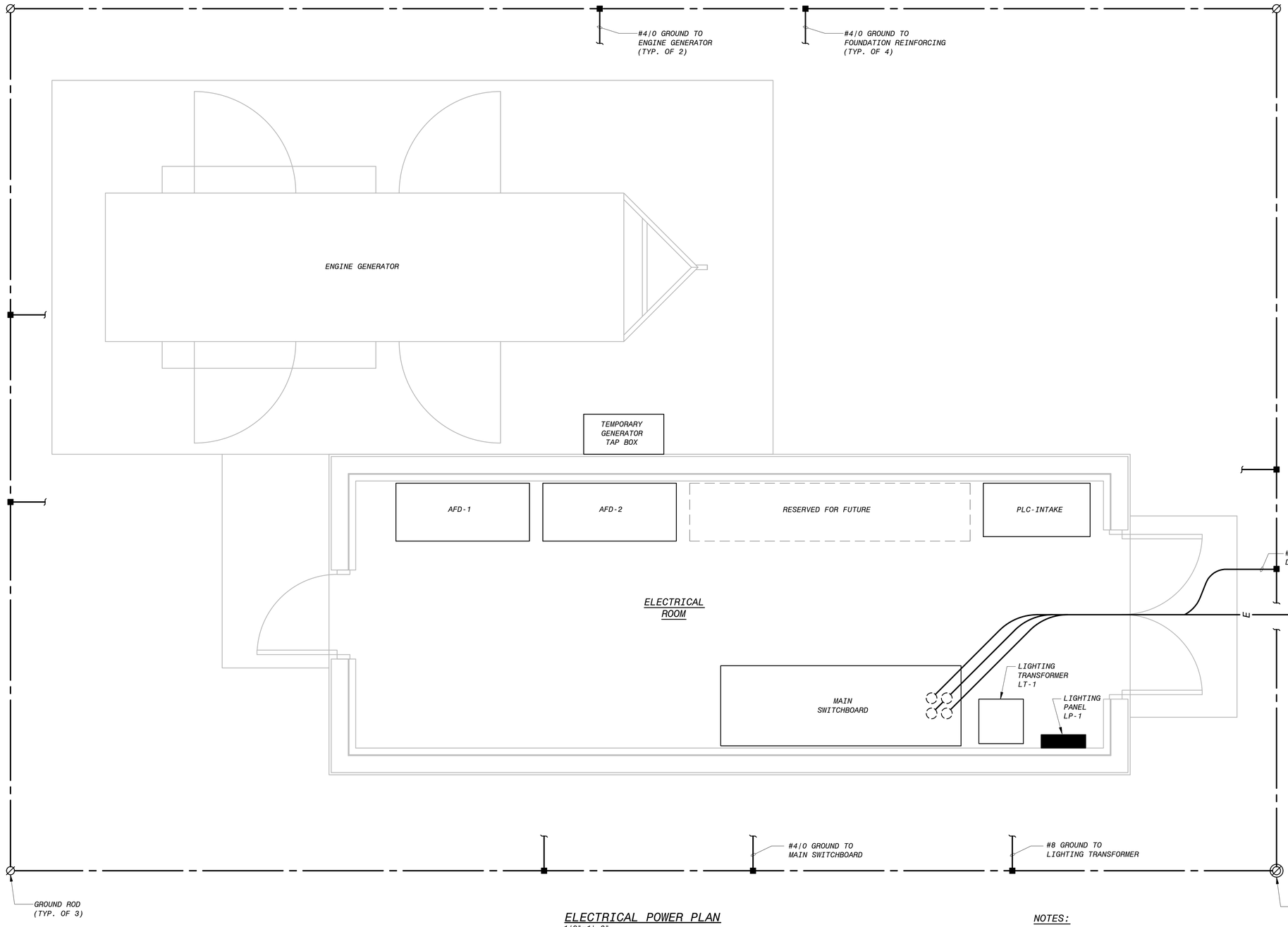

ELECTRICAL POWER PLAN

1/2"=1'-0"

NOTES:

1. SEE DRAWING E-00-001 FOR ELECTRICAL LEGEND & ABBREVIATIONS AND GENERAL REQUIREMENTS.

PRELIMINARY - NOT FOR CONSTRUCTION

DATE	REVISIONS AND RECORD OF ISSUE	NO.	BY	CK	APP
5/16/14	ISSUED FOR PRICING	A			

50.3040 - Electrical Drawings
E-20-401.dwg

SAVED:PAS12835, 2/24/2015 1:28:17 PM
PLOTTED:3/5/2015 5:20:41 AM
USER:PHADMIN DWG VER:1000

XREF1:
XREF2:
XREF3:
XREF4:

BLACK & VEATCH
Building a world of difference.

Black & Veatch Corporation
Virginia Beach, VA

BEDFORD REGIONAL WATER AUTHORITY
SMITH MOUNTAIN LAKE WTP &
RAW WATER PUMPING STATION / INTAKE

ELECTRICAL
RAW WATER PUMPING STATION
ELECTRICAL BUILDING POWER PLAN

DESIGNED: ZKO
DETAILED: RTD
CHECKED:
APPROVED:
DATE:

0 1/2 1
IF THIS BAR DOES NOT MEASURE 1" THEN DRAWING IS NOT TO FULL SCALE

PROJECT NO.
182262

E-20-401
SHEET
OF

FD7000
D7000

12" 6" 0 1' 2' 3' 4' 5'

1/2"=1'-0"

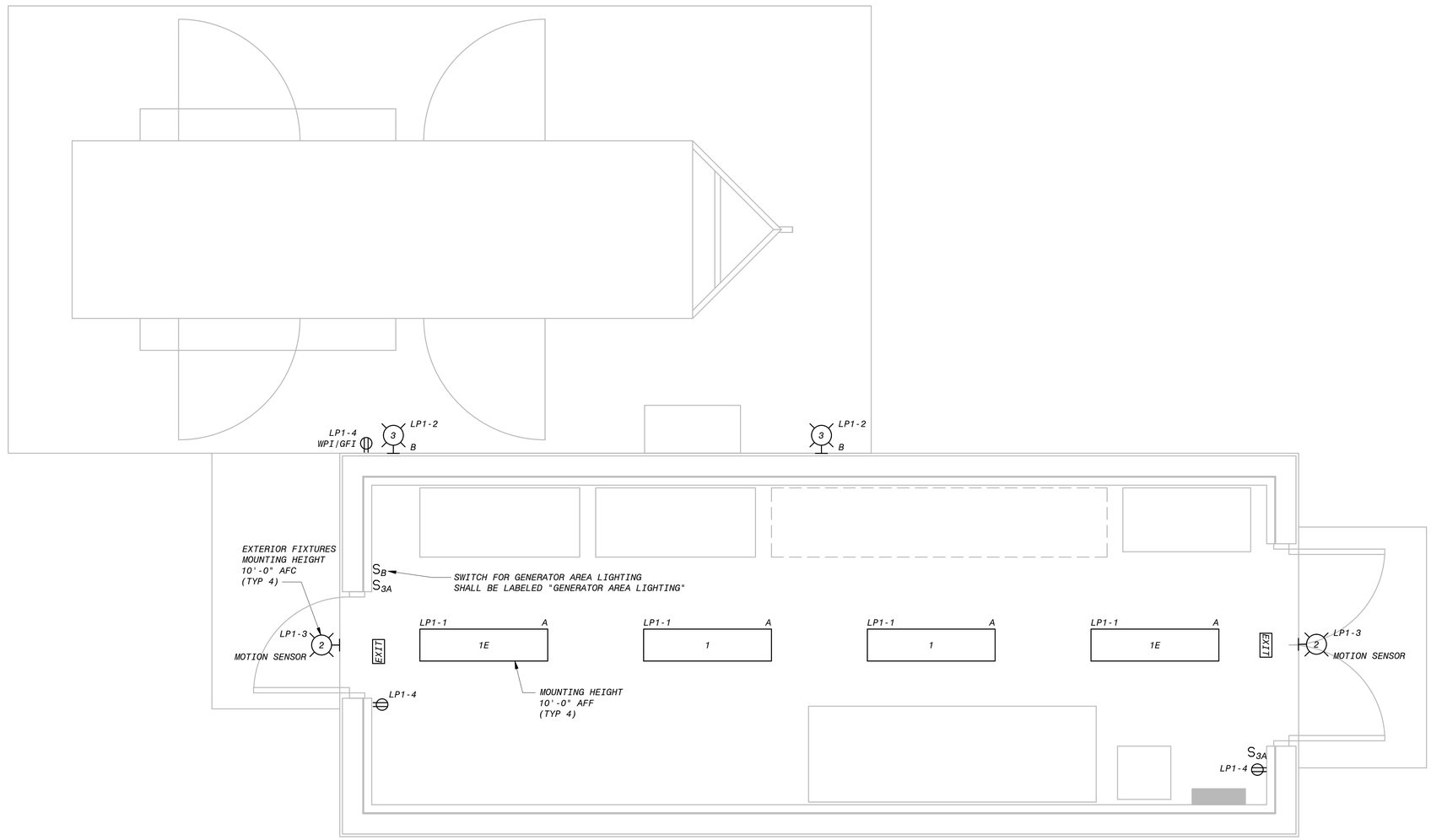

ELECTRICAL LIGHTING PLAN

1/2"=1'-0"

NOTES:

1. SEE DRAWING E-00-001 FOR ELECTRICAL LEGEND & ABBREVIATIONS AND GENERAL REQUIREMENTS.

PRELIMINARY - NOT FOR CONSTRUCTION

DATE	REVISIONS AND RECORD OF ISSUE	NO.	BY	CK	APP

50.3040 - Electrical Drawings
E-20-402.dwg

SAVED: PASI28335, 2/24/2015 1:28:17 PM
PLOTTED: 3/5/2015 5:20:09 AM
USER: PHADMIN
DWG VER: 1000

XREF1:
XREF2:
XREF3:
XREF4:

BLACK & VEATCH
Building a world of difference.

Black & Veatch Corporation
Virginia Beach, VA

BEDFORD REGIONAL WATER AUTHORITY
SMITH MOUNTAIN LAKE WTP &
RAW WATER PUMPING STATION / INTAKE

ELECTRICAL
RAW WATER PUMPING STATION
ELECTRICAL BUILDING LIGHTING PLAN

DESIGNED: DGP
DETAILED: DGP
CHECKED:
APPROVED:
DATE:

0 1/2 1
IF THIS BAR DOES NOT MEASURE 1" THEN DRAWING IS NOT TO FULL SCALE

PROJECT NO.
182262

E-20-402
SHEET
OF

FD7000
D7000

LIGHTING FIXTURE SCHEDULE

FIXTURE	LAMP	MOUNTING HGT	DESCRIPTION	MANUFACTURER
1	2 32W T8 LINEAR FLOURESCENT	CHAIN MOUNTED 10'-0" AFF	CONSTRUCTED OF COLD ROLLED, 20-GAUGE STEEL, RUST RESISTANT, WHITE STRAIT BLADE LOUVER ASSEMBLY, WIDE DISTRIBUTION, 120V, INSTANT START ELECTRIC BALLAST	LITHONIA #: MS8ST 2 32 SBL WD 120 GEB10IS ACCESSORIES #: HC36
1E	2 32W T8 LINEAR FLOURESCENT	CHAIN MOUNTED 10'-0" AFF	CONSTRUCTED OF COLD ROLLED, 20-GAUGE STEEL, RUST RESISTANT, WHITE STRAIT BLADE LOUVER ASSEMBLY, WIDE DISTRIBUTION, 120V, INSTANT START ELECTRIC BALLAST, EMERGENCY BATTERY BACKUP.	LITHONIA #: MS8ST 2 32 SBL WD 120 GEB10IS EL55 ACCESSORIES #: HC36
2	10 LED 24 WATT 1959 LUMENS	AS SPECIFIED ON DRAWINGS.	LED WALL MOUNT FIXTURE, ONE ENGINE (10 LEDS), 4000K, TYPE IV DISTRIBUTION, EMERGENCY BATTERY BACKUP, MOTION SENSOR, 120V	LITHONIA #: WST LED 1 10A700/40K SR4 120 ELCW PIR DDBXD
3	20 LED 72 WATT 4683 LUMENS	AS SPECIFIED ON DRAWINGS.	LED WALL MOUNT FIXTURE, TWO ENGINES (20 LEDS), 5000K, TYPE III MEDIUM DISTRIBUTION, EMERGENCY BATTERY BACKUP, 120V	LITHONIA #: TSH LED 20C 1000 50K T3M 120 ELSW DDBXD
EXIT	LED EXIT SIGN	AS SPECIFIED ON DRAWINGS.	CONSTRUCTED OF THERMOPLASTIC HOUSING THAT IS IMPACT RESISTANT, SCRATCH-RESISTANT, AND CORROSION-PROOF, WHITE HOUSING COLOR, UNIVERSAL MOUNTING, 120/277V	LITHONIA #: LQM S W 3 R 120/277

			PANELBOARD: LP-1		BUS: COPPER				MAINS:3P-50				
PHASE			SERVICE: 120/208V, 3PH, 4W, S/N		RATING:225A				LOCATION: RAW WATER PUMP STATION-ELECTRICAL ROOM		PHASE		
"A"	"B"	"C"	MOUNTING: SURFACE								"A"	"B"	"C"
V.A.	V.A.	V.A.	LOAD	P	BKR	CKT #		BKR	P	LOAD	V.A.	V.A.	V.A.
260			ELECTRICAL ROOM LIGHTING	1	20	1	2	20	1	GENERATOR AREA LIGHTING	300		
	300		OUTDOOR LIGHTING	1	20	3	4	20	1	ELECTRICAL ROOM RECEPTACLES		540	
			SPARE	1	20	5	6	20	1	SPARE			
			SPARE	1	20	7	8	20	1	SPARE			
			SPARE	1	20	9	10	20	1	SPARE			
			SPARE	1	20	11	12	20	1	SPARE			
			SPARE	1	20	13	14	20	1	SPARE			
			SPARE	1	20	15	16	20	1	SPARE			
			SPARE	1	20	17	18	20	1	SPARE			
			SPACE	1		19	20		1	SPACE			
			SPACE	1		21	22		1	SPACE			
			SPACE	1		23	24		1	SPACE			
260			TOTAL "A"			560				TOTAL "A"	300		
	300		TOTAL "B"			840				TOTAL "B"		540	
		0	TOTAL "C"			0				TOTAL "C"			0
			TOTAL =			1400							

NOTES:

1. SEE DRAWING E-00-001 FOR ELECTRICAL LEGEND & ABBREVIATIONS AND GENERAL REQUIREMENTS.

PRELIMINARY - NOT FOR CONSTRUCTION

DATE	REVISIONS AND RECORD OF ISSUE	NO.	BY	CK	APP
5/16/14	ISSUED FOR PRICING	A			

50.3040 - Electrical Drawings
E-20-501.dwg

SAVED:PAS12835, 2/25/2015 1:21:17 PM
PLOTTED:3/5/2015 5:17:19 AM
USER:PHADMIN DWG VER:1000

XREF1:
XREF2:
XREF3:
XREF4:

BLACK & VEATCH
Building a world of difference.

Black & Veatch Corporation
Virginia Beach, VA

BEDFORD REGIONAL WATER AUTHORITY
SMITH MOUNTAIN LAKE WTP &
RAW WATER PUMPING STATION / INTAKE

ELETRICAL
LIGHTING FIXTURE & PANELBOARD SCHEDULES
AND DETAILS

DESIGNED: ZKO
DETAILED: RTD
CHECKED:
APPROVED:
DATE:

0 1/2 1
IF THIS BAR DOES NOT MEASURE 1" THEN DRAWING IS NOT TO FULL SCALE

PROJECT NO.
182262

E-20-501
SHEET
OF

FD7000
D7000

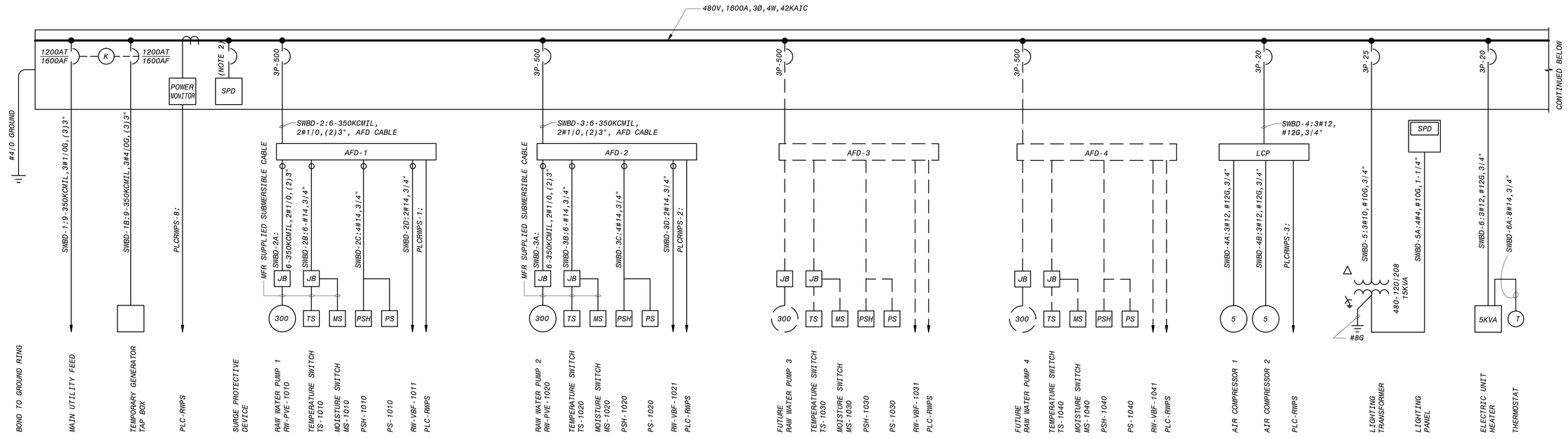

MAIN SWITCHBOARD ONE-LINE DIAGRAM

NO SCALE

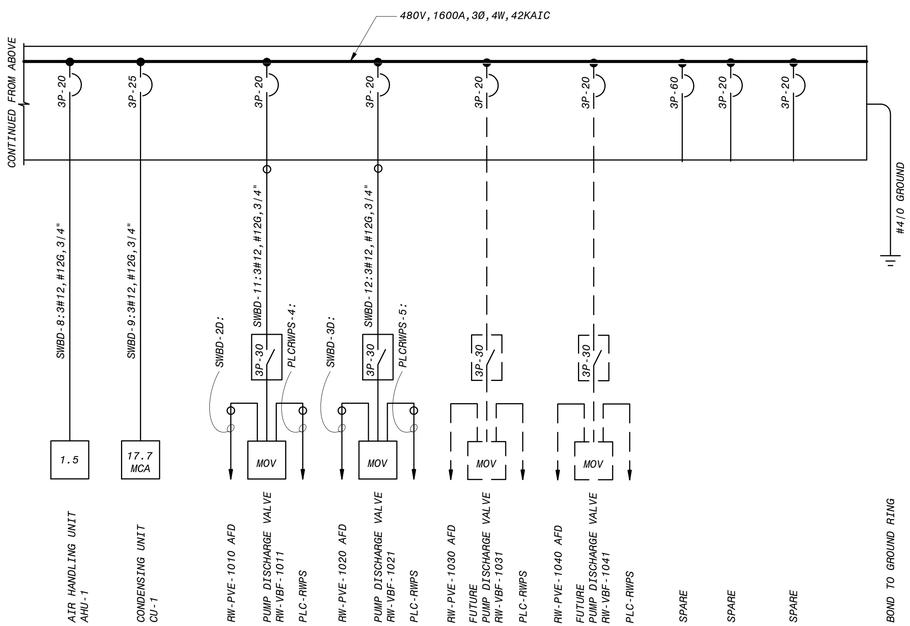

MAIN SWITCHBOARD ONE-LINE DIAGRAM (CONT.)

NO SCALE

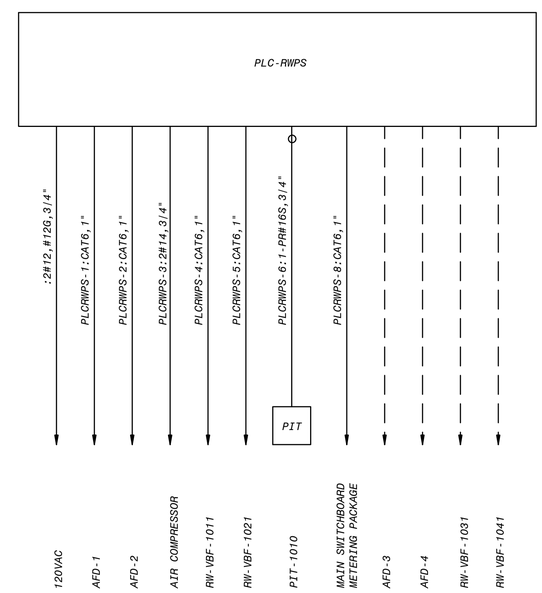

PLC-INTAKE ONE-LINE DIAGRAM

NO SCALE

NOTES:

1. SEE DRAWING E-00-001 FOR ELECTRICAL LEGEND & ABBREVIATIONS AND GENERAL REQUIREMENTS.
2. SPD BREAKER SHALL BE SIZED PER MFR. RECOMMENDATIONS.
3. TE-1A THRU 1F ARE MOTOR WINDING RTDS WIRED TO THE MOTOR JUNCTION BOX.

PRELIMINARY - NOT FOR CONSTRUCTION

DATE	REVISIONS AND RECORD OF ISSUE	NO.	BY	CK	APP
8/11/14	PROCESS REVISION	B	JES	ZKO	
5/16/14	ISSUED FOR PRICING	A	ZKO	SDS	

50.3040 - Electrical Drawings E-20-701.dwg

SAVED: PAS12835, 12/30/2014 10:53:25 AM
PLOTTED: 3/5/2015 5:18:21 AM
USER: PHAMTN DWG VER: 1000

XREF1:
XREF2:
XREF3:
XREF4:

BLACK & VEATCH
Building a world of difference.
Black & Veatch Corporation
Virginia Beach, VA

BEDFORD REGIONAL WATER AUTHORITY
SMITH MOUNTAIN LAKE WTP &
RAW WATER PUMPING STATION / INTAKE

ELECTRICAL
MAIN SWITCHBOARD & PLC
ONE-LINE DIAGRAMS

DESIGNED: ZKO
DETAILED: JES
CHECKED:
APPROVED:
DATE:

0 1/2 1
IF THIS BAR DOES NOT MEASURE 1" THEN DRAWING IS NOT TO FULL SCALE

PROJECT NO. 182262

E-20-701
SHEET
OF

FD7000
D7000

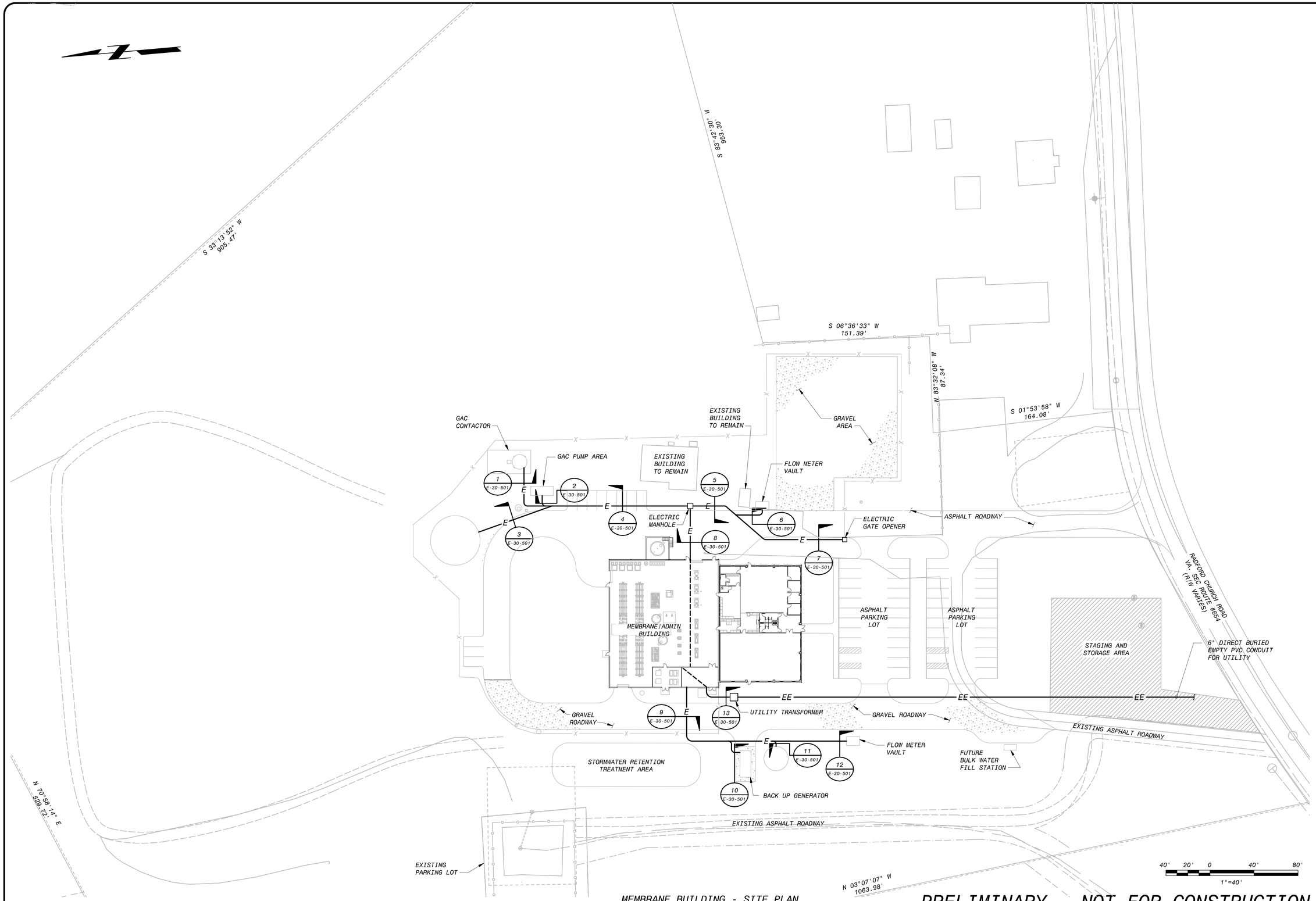

MEMBRANE BUILDING - SITE PLAN
1" = 40'-0"

PRELIMINARY - NOT FOR CONSTRUCTION

NO.	BY	CK	APP
B			
A			

DATE	REVISIONS AND RECORD OF ISSUE
05/23/14	GENERAL REVISION
04/29/14	INITIAL ISSUE

50.3040 - Electrical Drawings
E-30-101.dwg
SAVED: PAS12835, 2/26/2015 3:55:35 PM
PLOTTED: 3/5/2015 5:19:38 AM
USER: PWADMIN
DWG VER: 1000
XREF1:BORDER.dwg
XREF2:2D-A-30-MEMBRANE-B1.dwg
XREF3:182262-C-30-Membrane-01.dwg
XREF4:BORDER.dwg

BLACK & VEATCH
Building a world of difference.
Black & Veatch Corporation
Virginia Beach, VA

BEDFORD REGIONAL WATER AUTHORITY
SMITH MOUNTAIN LAKE WTP &
RAW WATER PUMPING STATION / INTAKE

ELECTRICAL
MEMBRANE BUILDING
SITE PLAN

DESIGNED:
DETAILED:
CHECKED:
APPROVED:
DATE:

0 1/2 1
IF THIS BAR DOES NOT MEASURE 1" THEN DRAWING IS NOT TO FULL SCALE

PROJECT NO.
182262

E-30-101
SHEET
OF

FD7000_PW
D7000

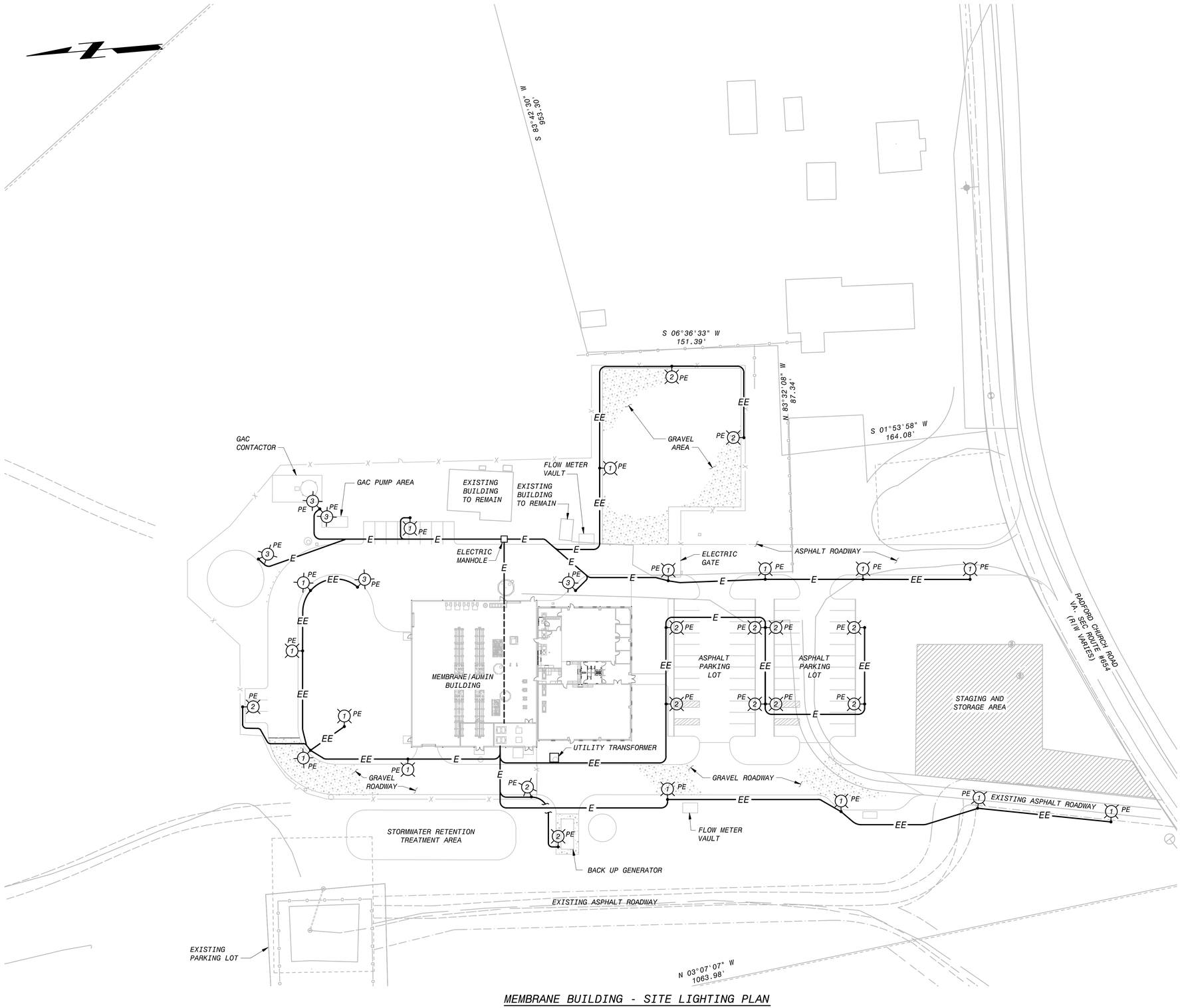

MEMBRANE BUILDING - SITE LIGHTING PLAN

1" = 40'-0"

NOTES:

1. SEE DRAWING E-1 FOR ELECTRICAL LEGEND & ABBREVIATIONS AND GENERAL REQUIREMENTS.

LIGHTING FIXTURE MODELS:

FIXTURE TYPE 1: LITHONIA# - KAD LED 40C 1000 40K R2 480 SPD 04 PER7 DBLXD DLL480F1.5 CUL JU

FIXTURE TYPE 2: LITHONIA# - KAD LED 40C 1000 40K R3 480 SPD 04 PER7 DBLXD DLL480F1.5 CUL JU

FIXTURE TYPE 3: LITHONIA# - KAD LED 40C 1000 40K R4 480 SPD 04 PER7 DBLXD DLL480F1.5 CUL JU

POLE: LITHONIA# - SSS 16 4C DM19 DBL

40' 20' 0 40' 80'

1"=40'

PRELIMINARY - NOT FOR CONSTRUCTION

DATE	REVISIONS AND RECORD OF ISSUE	NO.	BY	CK	APP
5/30/14	INITIAL ISSUE	A	RTD	ZKO	

50.3040 - Electrical Drawings

E-30-102.dwg

XREF1:192262-C-30-Membrane-01.dwg

SAVED: PAS12835, 3/5/2015 9:37:07 AM

XREF2:192262-C-30-Membrane-01-E.dwg

PLOTTED: 3/5/2015 9:38:29 AM

XREF3:2D-A-30-MEMBRANE.dwg

USER: PHADMIN

DWG VER: 1000

XREF4:2D-M-30-MEMBRANE-B1.dwg

BLACK & VEATCH
Building a world of difference.

Black & Veatch Corporation
Kansas City, Missouri

ELECTRICAL
MEMBRANE BUILDING
SITE LIGHTING PLAN

DESIGNED: ZKO
DETAILED: DAH
CHECKED:
APPROVED:
DATE:

0 1/2 1

IF THIS BAR DOES NOT MEASURE 1" THEN DRAWING IS NOT TO FULL SCALE

PROJECT NO.
182262

E-30-102
SHEET
OF

F07000_PW
D7000

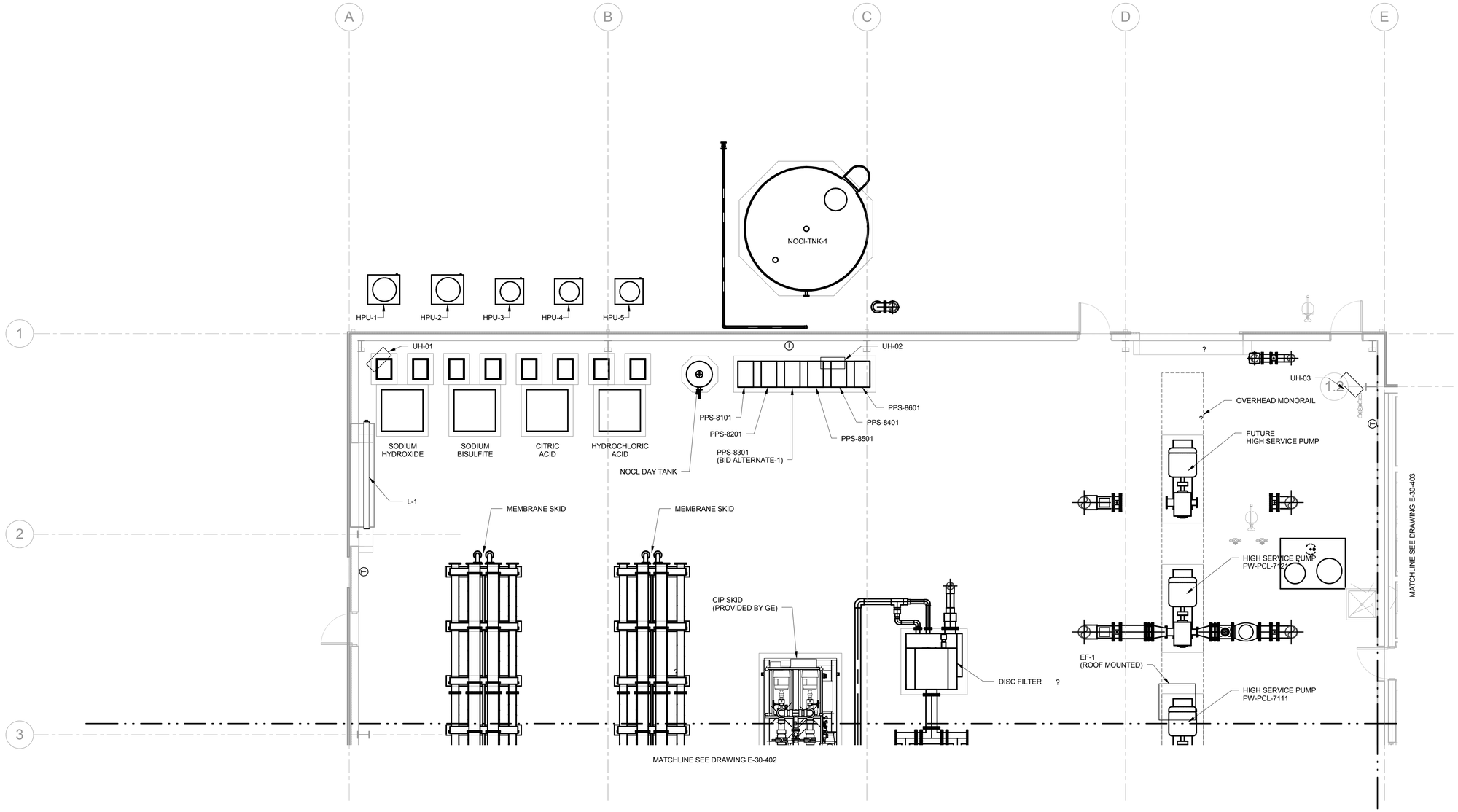

1 POWER PLAN - OPERATING FLOOR
3/16" = 1'-0"

PRELIMINARY - NOT FOR CONSTRUCTION

DATE	REVISIONS AND RECORD OF ISSUE	NO.	BY	CHK	APP

PW: C:\pw_working\cngpw\d1281524\SD-E-30-MEMBRANE BV, rvt
SW: XREF1:
SAVED: 3/4/2015 4:23:29 PM XREF2:
PLOTTED: XREF3:
USER: DWG VER: XREF4:

BLACK & VEATCH
Building a world of difference.
Black & Veatch Corporation
Kansas City, Missouri

BEDFORD REGIONAL WATER AUTHORITY
SMITH MOUNTAIN LAKE WTP &
LAKES TO FOREST WATER LINE EXTENSION

ELECTRICAL
MEMBRANE/ADMIN BUILDING
PARTIAL POWER PLAN

DESIGNED: Designer
DETAILED: Author
CHECKED: Checker
APPROVED: Approver
DATE: 5/05/2014

0 1/2 1
IF THIS BAR DOES NOT MEASURE 1" THEN DRAWING IS NOT TO FULL SCALE

PROJECT NO.
27872

E-30-404
SHEET
OF

D7000

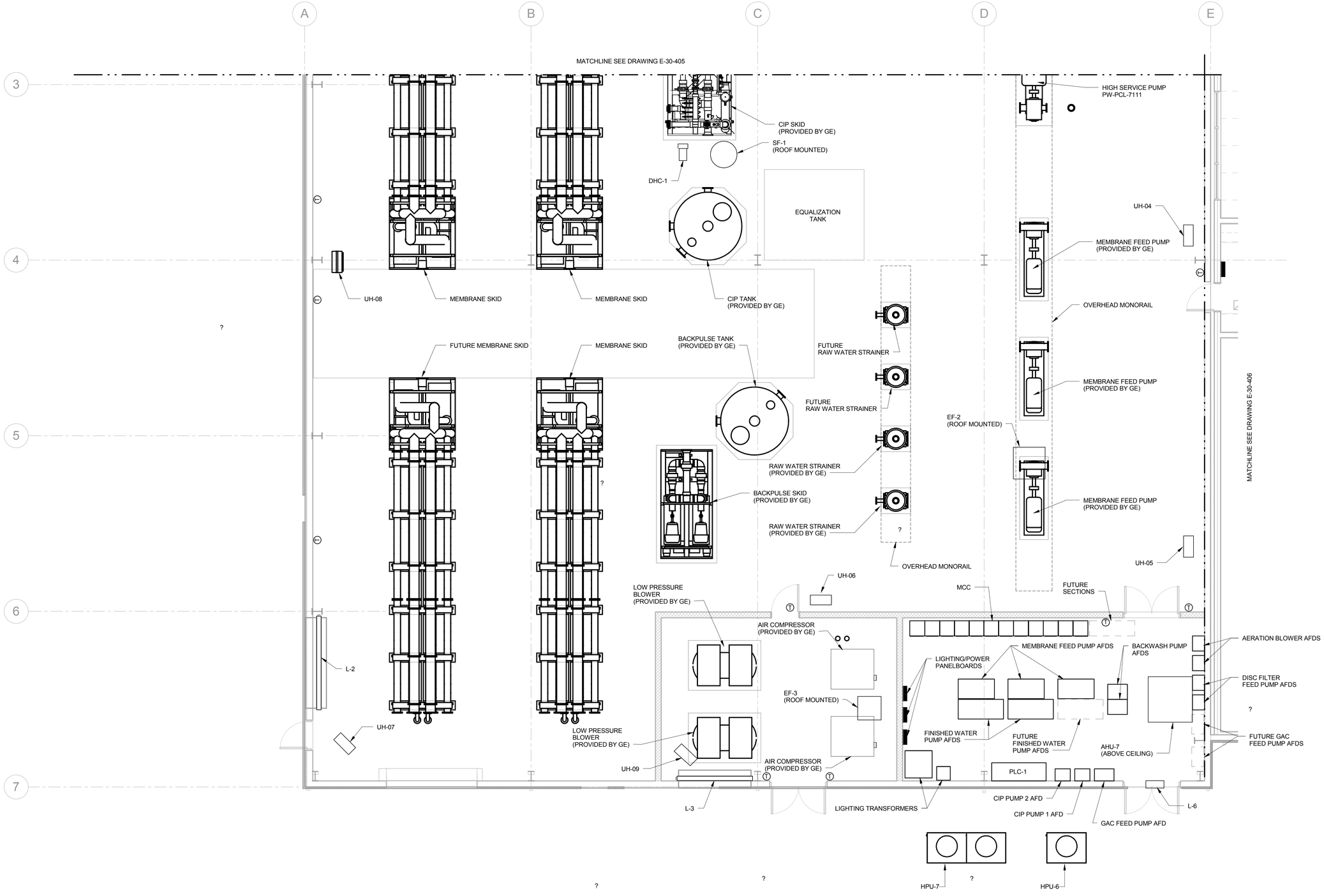

1 POWER PLAN - OPERATING FLOOR
3/16" = 1'-0"

PRELIMINARY - NOT FOR CONSTRUCTION

DATE	REVISIONS AND RECORD OF ISSUE	NO.	BY	CHK	APP

PW: C:\pw_working\df281524\D-E-30-MEMBRANE_BV.rvt
SAVED: 3/5/2015 7:32:26 AM
PLOTTED:
USER:
DWG VER:
XREF1:
XREF2:
XREF3:
XREF4:

BLACK & VEATCH
Building a world of difference.
Black & Veatch Corporation
Kansas City, Missouri

BEDFORD REGIONAL WATER AUTHORITY
SMITH MOUNTAIN LAKE WTP &
LAKES TO FOREST WATER LINE EXTENSION

ELECTRICAL
MEMBRANE/ADMIN BUILDING
PARTIAL POWER PLAN

DESIGNED: Designer
DETAILED: Author
CHECKED: Checker
APPROVED: Approver
DATE: 5/05/2014

0 1/2 1
IF THIS BAR DOES NOT MEASURE 1" THEN DRAWING IS NOT TO FULL SCALE

PROJECT NO.
27872

E-30-405
SHEET
OF

D7000

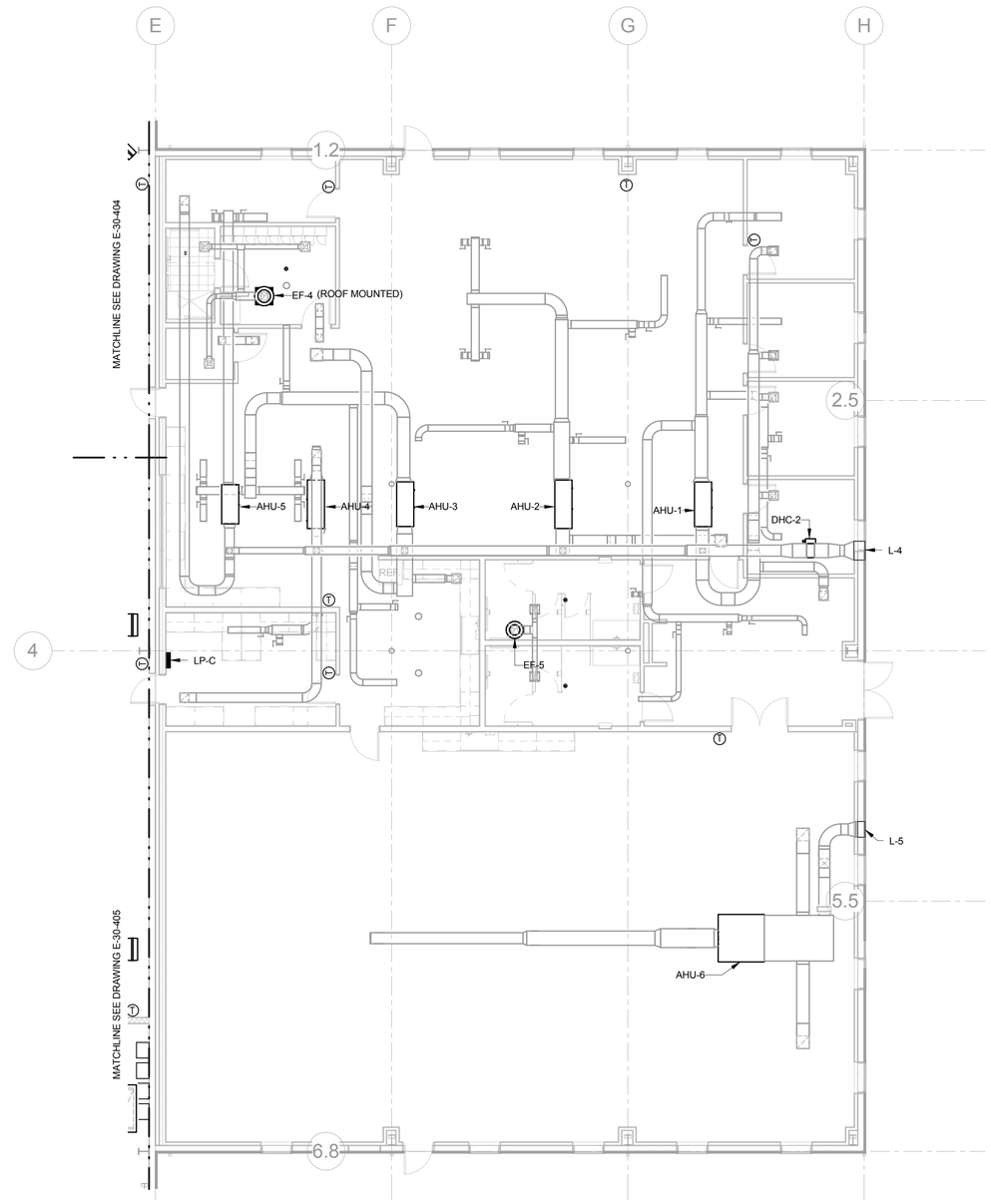

1 POWER PLAN - OPERATING FLOOR
1/8" = 1'-0"

PRELIMINARY - NOT FOR CONSTRUCTION

DATE	REVISIONS AND RECORD OF ISSUE	NO.	BY	CHK	APP

PW: C:\pw_working\cngpw\d1281524\SD-E-30-MEMBRANE_BV.rvt
SW:
SAVED: 3/4/2015 4:23:34 PM
PLOTTED:
USER:
XREF1:
XREF2:
XREF3:
XREF4:
DWG VER:

BLACK & VEATCH
Building a world of difference.
Black & Veatch Corporation
Kansas City, Missouri

BEDFORD REGIONAL WATER AUTHORITY
SMITH MOUNTAIN LAKE WTP &
LAKES TO FOREST WATER LINE EXTENSION

ELECTRICAL
MEMBRANE/ADMIN BUILDING
PARTIAL POWER PLAN

DESIGNED: Designer
DETAILED: Author
CHECKED: Checker
APPROVED: Approver
DATE: 5/05/2014

0 1/2 1
IF THIS BAR DOES NOT MEASURE 1" THEN DRAWING IS NOT TO FULL SCALE

PROJECT NO.
27872

E-30-406
SHEET
OF

D7000

GENERAL NOTES

1. CIRCUIT ALL EXIT SIGNS TO PANEL HV CIRCUIT 10 WITH 2#10,1#10G IN 3/4"C.

Drawing Copyright © 2014

CHA
1901 Innovation Drive, Suite 2100
Blacksburg, VA 24060
Main: (518) 453-4500 www.chacompanies.com

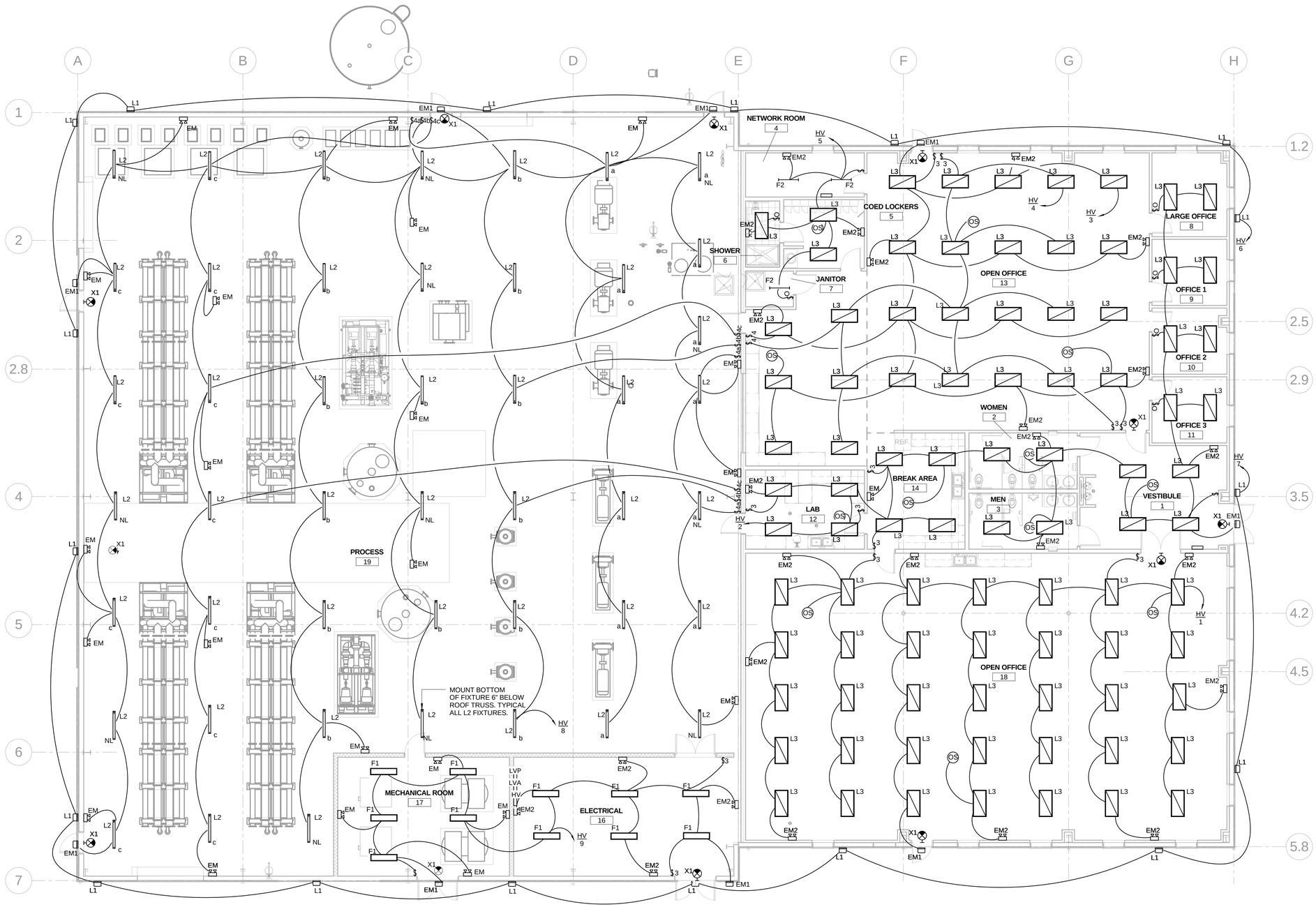

1 LIGHTING PLAN - OPERATING FLOOR
1/8" = 1'-0"

NOT FOR CONSTRUCTION

NO.	BY	CHK	APP
A			

02/27/15 LEVEL 2 DESIGN DOCUMENTS
DATE REVISIONS AND RECORD OF ISSUE
PW: C:\Users\3856\Documents\27872-ELEC13-CENTRAL(IND)_3856_CEImer.rvt
SW:
SAVED: 2/27/2015 1:40:03 PM
PLOTTED:
USER:
XREF1:
XREF2:
XREF3:
XREF4:
DWG VER: A

BLACK & VEATCH
Building a world of difference
Black & Veatch Corporation
Kansas City, Missouri

BEDFORD REGIONAL WATER AUTHORITY
SMITH MOUNTAIN LAKE WTP &
LAKES TO FOREST WATER LINE EXTENSION

ELECTRICAL
MEMBRANE/ADMIN
LIGHTING PLAN

DESIGNED: MA
DETAILED: CJE
CHECKED: MLS
APPROVED: MLS
DATE: 12/15/2014

0 1/2 1
IF THIS BAR DOES NOT MEASURE 1" THEN DRAWING IS NOT TO FULL SCALE

CHA PROJECT NO.
27872

E-30-404
SHEET
OF

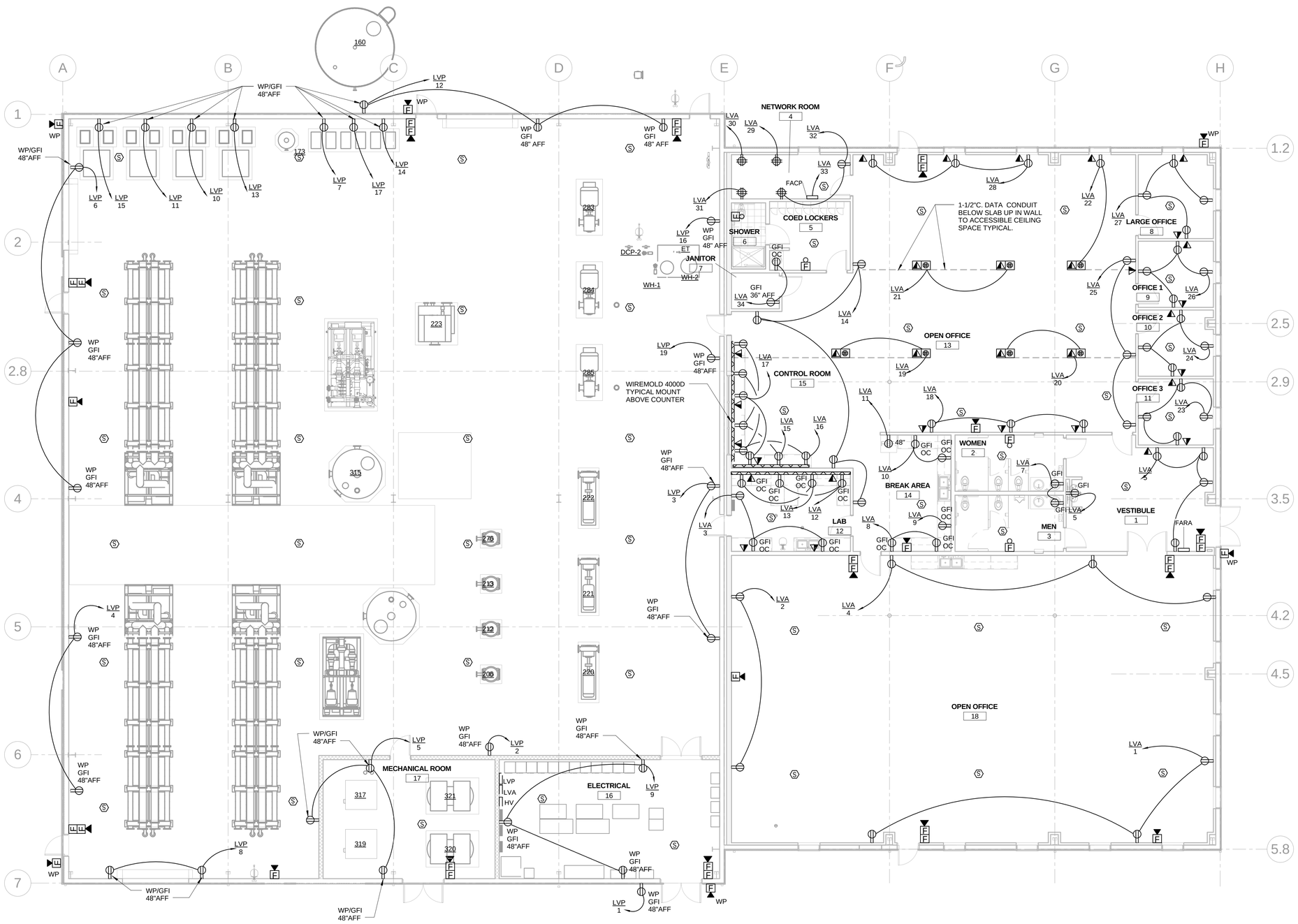

1 POWER PLAN - OPERATING FLOOR
1/8" = 1'-0"

NOT FOR CONSTRUCTION

Drawing Copyright © 2014

CHA
1901 Innovation Drive, Suite 2100
Blacksburg, VA 24060
Main: (518) 453-4500 www.chacompanies.com

NO.	BY	CHK	APP
A			

02/27/15 LEVEL 2 DESIGN DOCUMENTS
DATE REVISIONS AND RECORD OF ISSUE
PW: C:\Users\3856\Documents\27872-ELEC13-CENTRAL(IND)_3856_CEImer.rvt
SW:
SAVED: 2/27/2015 1:40:16 PM
PLOTTED:
USER:
DWG VER: A
XREF1:
XREF2:
XREF3:
XREF4:

BLACK & VEATCH
Building a world of difference
Black & Veatch Corporation
Kansas City, Missouri

BEDFORD REGIONAL WATER AUTHORITY
SMITH MOUNTAIN LAKE WTP &
LAKES TO FOREST WATER LINE EXTENSION

ELECTRICAL
CONVENIENCE POWER AND SYSTEMS
PLAN

DESIGNED: MA
DETAILED: CJE
CHECKED: MLS
APPROVED: MLS
DATE: 12/15/2014

0 1/2 1
IF THIS BAR DOES NOT MEASURE 1" THEN DRAWING IS NOT TO FULL SCALE

CHA PROJECT NO.
27872

E-30-405
SHEET
OF

D7000

LOCATION: ELECTRICAL 16		PANEL ID	VOLTS, PHASE, WIRE:	120/208 Wye/3/4W
MOUNTING: Surface		**LVA**	MAINS:	100A
SOURCE:			SHORT CIRCUIT RATING:	

CKT	LOAD DESCRIPTION	CB/ AMPS	P	A		B		C		P	CB/ AMPS	LOAD DESCRIPTION	CKT
1	REC: OPEN OFFICE 18	20 A	1	540 VA	360 VA					1	20 A	REC: OPEN OFFICE 18	2
3	REC: LAB 12	20 A	1			540 VA	540 VA			1	20 A	REC: OPEN OFFICE 18	4
5	REC: VEST 1 DRINKING FOUNTAIN	20 A	1					180 VA	720 VA	1	20 A	REC: VEST 1	6
7	REC: MEN 3 & WOMEN 2	20 A	1	360 VA	360 VA					1	20 A	REC: BREAK AREA 14	8
9	REC: BREAK AREA 14	20 A	1			180 VA	360 VA			1	20 A	REC: BREAK AREA 14	10
11	REC: BREAK AREA 14 FRIDGE	20 A	1					180 VA	360 VA	1	20 A	REC: LAB 12	12
13	REC: LAB 12	20 A	1	360 VA	720 VA					1	20 A	REC: OPEN OFFICE 13	14
15	REC: CONTROL RM 15	20 A	1			540 VA	540 VA			1	20 A	REC: CONTROL RM 15	16
17	REC: CONTROL RM 15	20 A	1					360 VA	540 VA	1	20 A	REC: OPEN OFFICE 13	18
19	REC: OPEN OFFICE 13 FLOOR BOX	20 A	1	800 VA	800 VA					1	20 A	REC: OPEN OFFICE FLOOR BOX	20
21	REC: OPEN OFFICE 13 FLOOR BOX	20 A	1			800 VA	580 VA			1	20 A	REC: OPEN OFFICE 13 FLOOR BOX AND WALL	22
23	REC: OFFICE 3 RM11	20 A	1					720 VA	720 VA	1	20 A	REC: OFFICE 2 RM10	24
25	REC: OPEN OFFICE 13	20 A	1	540 VA	720 VA					1	20 A	REC: OFFICE 1 RM9	26
27	REC: LARGE OFFICE RM8	20 A	1			720 VA	540 VA			1	20 A	REC: OPEN OFFICE 13	28
29	REC: RM 4	20 A	1					360 VA	360 VA	1	20 A	REC: NETWORK RM 4	30
31	REC: NETWORK RM 4	20 A	1	360 VA	540 VA					1	20 A	REC: NETWORK RM 4	32
33	FACP PANEL	20 A	1			1200 VA	360 VA			1	20 A	Receptacle	34
35	SPARE	20 A	1					0 VA	0 VA	1	20 A	SPARE	36
37	SPARE	20 A	1	0 VA	0 VA					--	--	SPACE	38
39	SPACE	--	--			0 VA	0 VA			--	--	SPACE	40
41	SPACE	--	--					0 VA	0 VA	--	--	SPACE	42
		TOTAL...		6460 VA		6900 VA		4500 VA					
		TOTAL...		56 A		60 A		38 A					

NOTES:

LOCATION: ELECTRICAL 16		PANEL ID	VOLTS, PHASE, WIRE:	120/208 Wye/3/4W
MOUNTING: Surface		**LVP**	MAINS:	100A
SOURCE:			SHORT CIRCUIT RATING:	

CKT	LOAD DESCRIPTION	CB/ AMPS	P	A		B		C		P	CB/ AMPS	LOAD DESCRIPTION	CKT
1	REC: EXTERIOR RM 16	20 A	1	180 VA	180 VA					1	20 A	REC: PROCESS AREA	2
3	REC: PROCESS AREA	20 A	1			360 VA	360 VA			1	20 A	REC: PROCESS AREA	4
5	REC: RM 17	20 A	1					540 VA	540 VA	1	20 A	REC: PROCESS AREA	6
7	REC: PROCESS AREA	20 A	1	180 VA	360 VA					1	20 A	REC: PROCESS AREA	8
9	REC: RM 16	20 A	1			540 VA	180 VA			1	20 A	REC: PROCESS AREA	10
11	REC: PROCESS AREA	20 A	1					180 VA	540 VA	1	20 A	REC: PROCESS AREA	12
13	REC: PROCESS AREA	20 A	1	180 VA	180 VA					1	20 A	REC: PROCESS AREA	14
15	REC: PROCESS AREA	20 A	1			180 VA	180 VA			1	20 A	REC: PROCESS AREA	16
17	REC: PROCESS AREA	20 A	1					180 VA	0 VA	--	--	SPACE	18
19	REC: PROCESS AREA	20 A	1	180 VA	0 VA					--	--	SPACE	20
21	SPACE	--	--			0 VA	0 VA			--	--	SPACE	22
23	SPACE	--	--					0 VA	0 VA	--	--	SPACE	24
25	SPACE	--	--	0 VA	0 VA					--	--	SPACE	26
27	SPACE	--	--			0 VA	0 VA			--	--	SPACE	28
29	SPACE	--	--					0 VA	0 VA	--	--	SPACE	30
31	SPACE	--	--	0 VA	0 VA					--	--	SPACE	32
33	SPACE	--	--			0 VA	0 VA			--	--	SPACE	34
35	SPARE	20 A	1					0 VA	0 VA	1	20 A	SPARE	36
37	SPARE	20 A	1	0 VA	0 VA					1	20 A	SPARE	38
39	SPARE	20 A	1			0 VA	0 VA			1	20 A	SPARE	40
41	SPARE	20 A	1					0 VA	0 VA	1	20 A	SPARE	42
		TOTAL...		1440 VA		1800 VA		1980 VA					
		TOTAL...		12 A		15 A		17 A					

NOTES:

LOCATION: ELECTRICAL 16		PANEL ID	VOLTS, PHASE, WIRE:	480/277 Wye/3/4W
MOUNTING: Surface		**HV**	MAINS:	100A MLO
SOURCE:			SHORT CIRCUIT RATING:	

CKT	LOAD DESCRIPTION	CB/ AMPS	P	A		B		C		P	CB/ AMPS	LOAD DESCRIPTION	CKT
1	LTG: OPEN OFFICE 18	20 A	1	1120 VA	768 VA					1	20 A	LTG: RM 14, 12, 11, 10, 9, 8, 3, 2, 1	2
3	LTG: OPEN OFFICE 13	20 A	1			480 VA	352 VA			1	20 A	LTG: OPEN OFFICE 13	4
5	LTG: RM. 4, 5, 6, 7	20 A	1					270 VA	504 VA	1	20 A	LTG: EXTERIOR NORTH	6
7	LTG: EXTERIOR SOUTH	20 A	1	720 VA	2254 VA					1	20 A	LTG: PROCESS AREA 19	8
9	LTG: RM 16, 17	20 A	1			648 VA	2 VA			1	20 A	LTG: EXIT SIGNS	10
11	SPACE	--	--					0 VA	0 VA	--	--	SPACE	12
13	SPACE	--	--	0 VA	0 VA					--	--	SPACE	14
15	SPACE	--	--			0 VA	0 VA			--	--	SPACE	16
17	SPACE	--	--					0 VA	0 VA	--	--	SPACE	18
19	SPACE	--	--	0 VA	0 VA					--	--	SPACE	20
21	SPACE	--	--			0 VA	0 VA			--	--	SPACE	22
23	SPACE	--	--					0 VA	0 VA	--	--	SPACE	24
25	SPACE	--	--	0 VA	0 VA					--	--	SPACE	26
27	SPACE	--	--			0 VA	0 VA			--	--	SPACE	28
29	SPACE	--	--					0 VA	0 VA	--	--	SPACE	30
31	SPACE	--	--	0 VA	0 VA					--	--	SPACE	32
33	SPACE	--	--			0 VA	0 VA			--	--	SPACE	34
35	SPARE	20 A	1					0 VA	0 VA	1	20 A	SPARE	36
37	SPARE	20 A	1	0 VA	0 VA					1	20 A	SPARE	38
39	SPARE	20 A	1			0 VA	0 VA			1	20 A	SPARE	40
41	SPARE	20 A	1					0 VA	0 VA	1	20 A	SPARE	42
		TOTAL...		4862 VA		1482 VA		774 VA					
		TOTAL...		18 A		6 A		3 A					

NOTES:

LIGHT FIXTURE SCHEDULE

SYMBOL	TAG	TYPE	DESCRIPTION	MOUNTING	LAMP(S)	WATTS	VOLTS	MANUFACTURER & CATALOG NUMBER	COMMENTS
	F1	FLUORESCENT	ENCLOSED AND GASKETED POLYCARBONATE IP65 RATED FIXTURE	CHAIN PENDANT 9' AFF	(2) F32 T8 35K	58W	UNV	LITHONIA: #DMW-232L-MVOLT-GEB10PS-WLF-BCD	
	F2	FLUORESCENT	STRIP FLUORESCENT FIXTURE WITH WIRE GAURD	CHAIN PENDANT	(2) F32 T8 35K	58W	UNV	LITHONIA: C-232-MVOLT-BINP-NC36-WGCUNNST	
	L1	LED	EXTERIOR WALL SCONCE FULL CUT OFF OPTICS AND MOTION RESPONSE PRESET DIMMING 75% AND 25%	SURFACE	72W 4000K LED	72W	UNV	GARDCO: 121-MR-3-75LA-NW-UNIV-BRP-PCB277-SPR	REFER TO ARCHITECTRUAL ELEVATIONS FOR MOUNTING HEIGHTS
	L2	LED	IP65 RATED CHAIN PENDANT MOUNTED LED FIXTURE. 4000K, 98LM PER WATT MINIMUM	PENDANT 6" BELOW BOTTOM OF STEEL	49W 4000K LED	49W	UNV	DONGBU LIGHTEC: #PGL-49-UM-P-L-1200-B-(N-D)	
	L3	LED	2X4 RECESSED LED PLATE TROFFER	RECESSE3D	3500K LED 32W	32W	277	LITE SHEET: BPS-24-32-2-3500K	
	X1	LED	VANDAL RESISTANT LED EXIT SIGN WITH BATTERY BACK-UP.	WALL	LED		UNV	DUAL-LITE: #SEWL-1-G-W-E	
	EM	INCANDESCENT	INDUSTRIAL EMERGENCY BATTERY LIGHTING UNIT SUITABLE FOR WALL OR PENDANT MOUNTING	WALL / PENDANT	INCLUDED		UNV	LITHONIA: #IND1254-W-H2012-SEL / ELA IND PM	WALL MOUNT 8' AFF PENDANT MOUNT 12'AFF
	EM1	LED	EXTERIOR EMERGENCY BATTERY LIGHTING UNIT	WALL	INCLUDED		UNV	EMERGI-LITE #BZ-LUX-SD-CW-FT	
	EM2	LED	EMERGENCY BATTERY LIGHTING UNIT	WALL 8' AFF	INCLUDED		UNV	DUAL-LITE #LZ-20-N-12-I-10W	

FIXTURE SCHEDULE NOTES:

1. CONTRACTOR SHALL BE RESPONSIBLE FOR VERIFYING ALL CEILING TYPES IN EACH SPACE AND FOR PROVIDING PROPER TRIMS FOR FIXTURES INDICATED.
2. ALL SUSPENDED LIGHT FIXTURES TO BE HUNG FROM STRUCTURE. ELECTRICAL CONTRACTOR SHALL BE RESPONSIBLE FOR ALL ADDITIONAL SUPPORTS, STEMS, THREADED ROD, STEEL CHANNELS AND RELATED EQUIPMENT.
3. ALL LIGHT FIXTURES TO BE INSTALLED IN SUSPENDED CEILINGS TO BE HUNG FROM STRUCTURE INDEPENDENT OF CEILING SUSPENSION SYSTEM AND FIXTURE LOCK CLIPS TO CEILING GRID AS PER NEC 410-16.
4. PRIOR TO ORDERING ANY LIGHT FIXTURE CONTRACTOR SHALL VERIFY COLOR AND FINISH OF ALL LIGHT FIXTURES WITH ARCHITECT.
5. ALL FLUORESCENT LAMPS TO HAVE A MINIMUM CRI OF 85. ALL T8 LAMPS TO BE HIGH PERFORMANCE TYPE. ALL FLUORESCENT LAMPS TO HAVE A 5 YEAR MINIMUM WARRANTY
6. ALL BALLASTS TO HAVE A MINIMUM THREE YEAR WARRANTY. ALL T8 FLUORESCENT BALLAST TO BE RATED HIGH PERFORMANCE AND SHALL HAVE A MINIUMUM BALLAST FACTOR OF 0.88.
7. FOR EXACT LOCATIONS OF LIGHT FIXTURES REFER TO ARCHITECTURAL REFLECTED CEILING PLANS.
8. WIRE ALL EMERGENCY LIGHTING UNITS AND EMERGENCY BATTERY BALLAST AHEAD OF ALL SWITCHES.

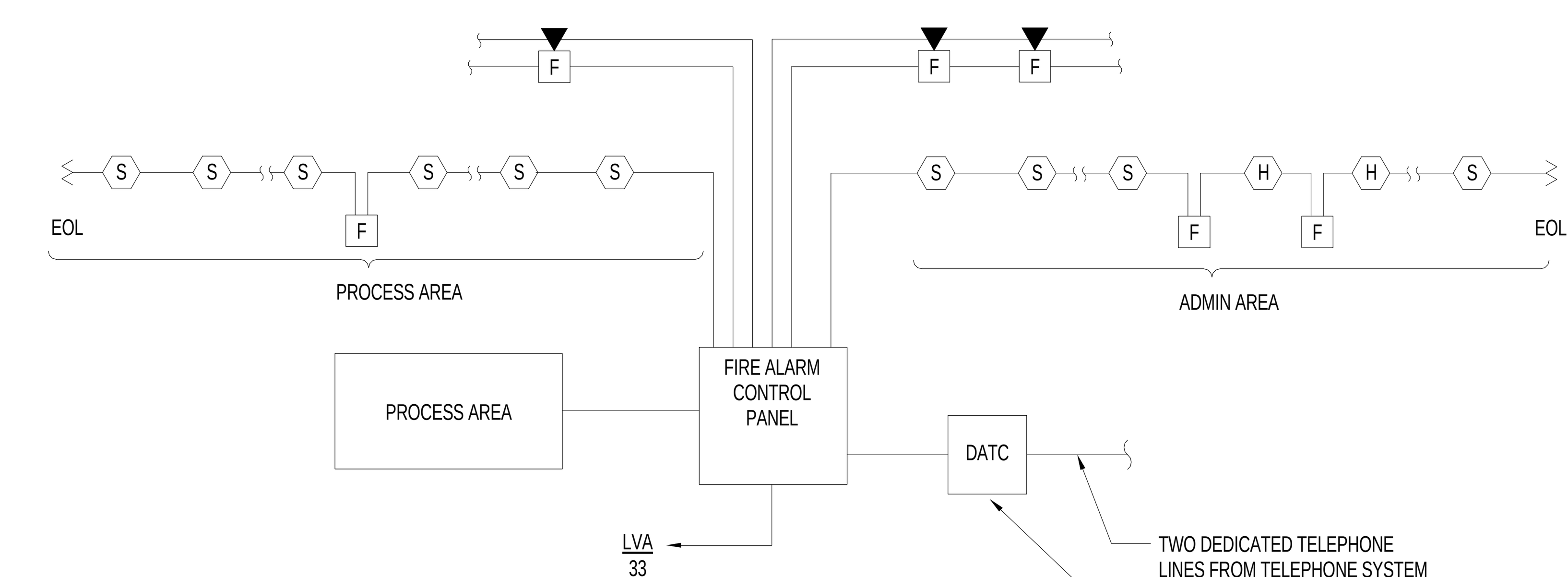

NOTES

1. FOR DEVICE QUANTITY AND LOCATION SEE FLOOR PLAN.
2. ALL WIRING SHALL BE 3/4" C. WITH 2#14 UNLESS OTHERWISE INDICATED AND AS PER MANUFACTURER'S RECOMMENDATIONS.
3. WIRE AUDIBLE AND VISUAL NOTIFICATION APPLIANCES SEPARATELY.
4. NOT ALL DEVICES AND APPLIANCES SHOWN FOR CLARITY.

(2) FIRE ALARM RISER
NOT TO SCALE

NOT FOR CONSTRUCTION

Drawing Copyright © 2014

CHA
1901 Innovation Drive, Suite 2100
Blacksburg, VA 24060
Main: (518) 453-4500 www.chacompanies.com

DATE	REVISIONS AND RECORD OF ISSUE	NO.	BY	CHK	APP
02/27/15	LEVEL 2 DESIGN DOCUMENTS	A			

PW: C:\Users\3856\Documents\27872-ELEC13-CENTRAL(IND)_3856_CElmer.rvt
SW: XREF1:
SAVED: 2/27/2015 1:40:16 PM XREF2:
PLOTTED: XREF3:
USER: DWG VER: A XREF4:

BLACK & VEATCH
Building a world of difference®
Black & Veatch Corporation
Kansas City, Missouri

BEDFORD REGIONAL WATER AUTHORITY
SMITH MOUNTAIN LAKE WTP &
LAKES TO FOREST WATER LINE EXTENSION

ELECTRICAL
MEMBRANE/ADMIN BUILDING
LIGHTING FIXTURE SCHEDULE

DESIGNED: MA
DETAILED: CJE
CHECKED: MLS
APPROVED: MLS
DATE: 12/15/2014

0 1/2 1
IF THIS BAR DOES NOT MEASURE 1" THEN DRAWING IS NOT TO FULL SCALE

CHA PROJECT NO.
27872

E-30-406
SHEET
OF

D7000

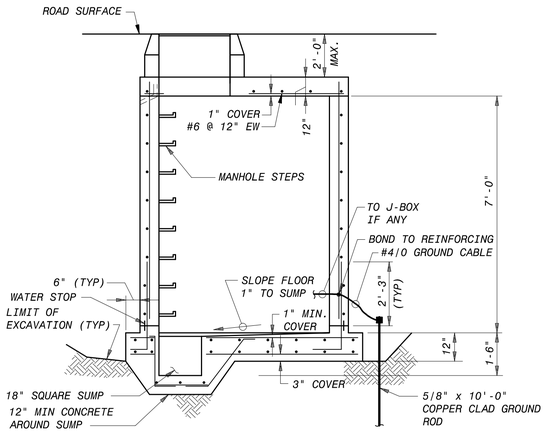

ELECTRICAL MANHOLE NOTES:

1. CABLE AND CONDUIT SUPPORTS SHALL BE SPACED AT 2'-0" HORIZONTAL CENTERS IN WALLS AND SHALL BEGIN 2'-0" FROM FLOOR.
2. SUPPORTS IN CEILINGS SHALL RUN FROM WALL TO WALL.
3. OPENING SHALL BE PROVIDED IN MANHOLE WALLS FOR CONDUIT BANK ENTRANCE AS REQUIRED.
4. ALL REINFORCING ON THIS DETAIL SHALL BE #6@12" UNLESS NOTED OTHERWISE. CENTER VERTICAL REINFORCING IN THE WALLS.
5. CONCRETE TO BE ROUGH AND CLEAN AT CONSTRUCTION JOINT FACES.

TRAFFIC RATED ELECTRICAL MANHOLE SECTION (--)

NO SCALE SUITABLE FOR ROADWAY LOCATIONS

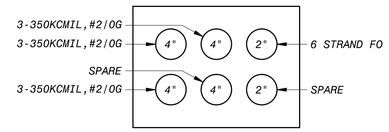

SECTION (1 / E-30-101)
NO SCALE

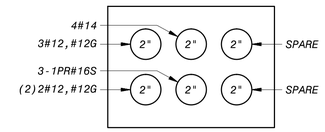

SECTION (2 / E-30-101)
NO SCALE

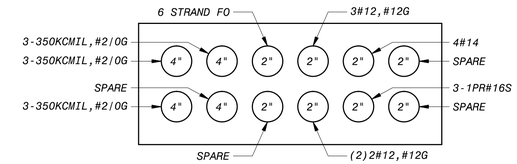

SECTION (3 / E-30-101)
NO SCALE

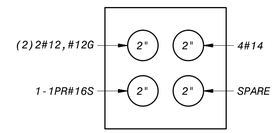

SECTION (4 / E-30-101)
NO SCALE

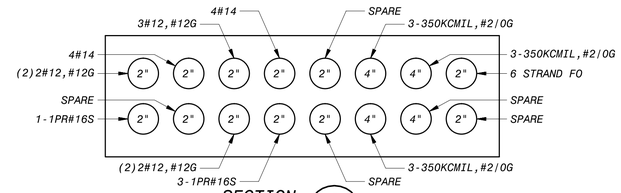

SECTION (5 / E-30-101)
NO SCALE

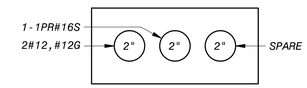

SECTION (6 / E-30-101)
NO SCALE

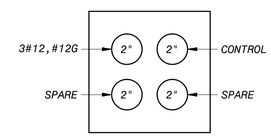

SECTION (7 / E-30-101)
NO SCALE

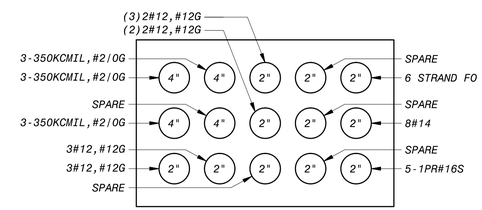

SECTION (8 / E-30-101)
NO SCALE

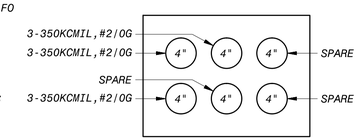

SECTION (10 / E-30-101)
NO SCALE

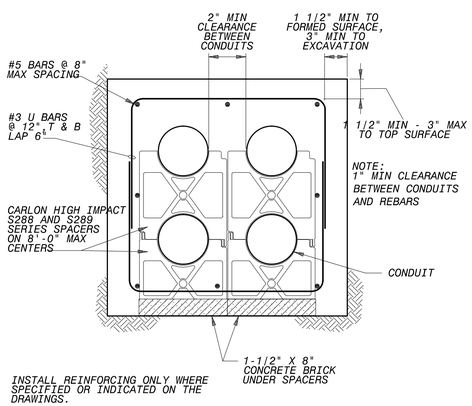

INSTALL REINFORCING ONLY WHERE SPECIFIED OR INDICATED ON THE DRAWINGS.

TYPICAL DUCT BANK SECTION

NO SCALE

NOTES:

1. SEE DRAWING E-1 FOR ELECTRICAL LEGEND & ABBREVIATIONS AND GENERAL REQUIREMENTS.

PRELIMINARY - NOT FOR CONSTRUCTION

DATE	REVISIONS AND RECORD OF ISSUE	NO.	BY	CK	APP
5/16/14	ISSUED FOR PRICING	A			

50.3040 - Electrical Drawings
E-30-501.dwg
SAVED: PAST2835, 12/30/2014 11:34:23 AM
PLOTTED: 3/13/2015 5:21:50 AM
USER: PHADMIN
XREF1: BORDER.dwg
XREF2:
XREF3:
XREF4:
DWG VER: 1000

BLACK & VEATCH
Building a world of difference.
Black & Veatch Corporation
Virginia Beach, VA

BEDFORD REGIONAL WATER AUTHORITY
SMITH MOUNTAIN LAKE WTP &
RAW WATER PUMPING STATION / INTAKE

ELECTRICAL DETAILS

DESIGNED: ZKO
DETAILED: DAH
CHECKED:
APPROVED:
DATE:

0 1/2 1
IF THIS BAR DOES NOT MEASURE 1" THEN DRAWING IS NOT TO FULL SCALE

PROJECT NO. 182262

E-30-501
SHEET
OF

F07000_PW
D7000

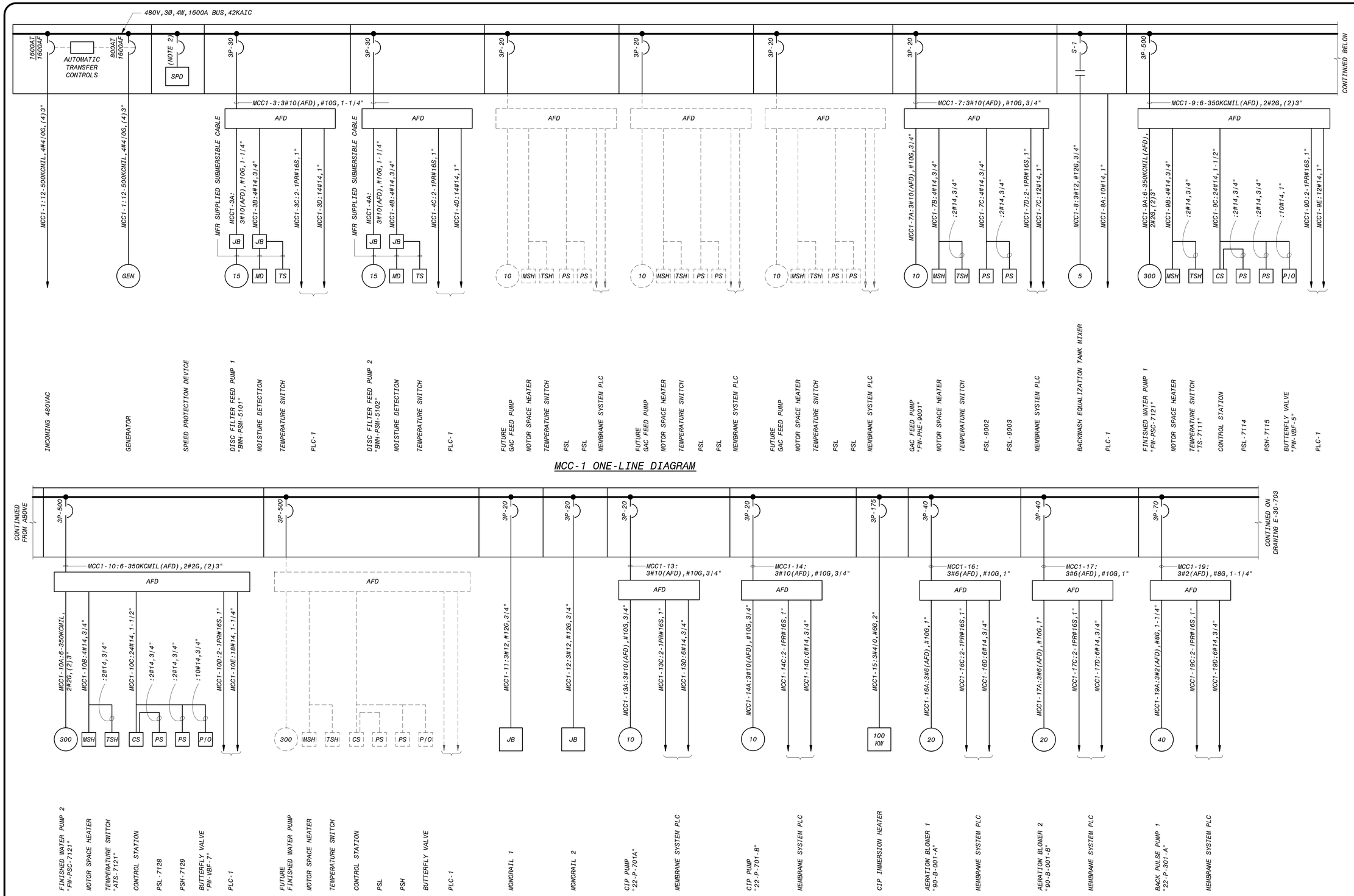

MCC-1 ONE-LINE DIAGRAM

MCC-1 ONE-LINE DIAGRAM

NOTES:

1. SEE DRAWING E-00-001 FOR ELECTRICAL LEGEND & ABBREVIATIONS AND GENERAL REQUIREMENTS.
2. SPD BREAKER SHALL BE SIZED BY EQUIPMENT MANUFACTURER.

PRELIMINARY - NOT FOR CONSTRUCTION

NO.	BY	CK	APP
B	RTD	ZKO	
A	ZKO	SDS	

DATE	REVISIONS AND RECORD OF ISSUE
5/30/14	GENERAL REVISION
5/16/14	ISSUED FOR PRICING

50.3040 - Electrical Drawings
E-30-701.dwg
SAVED: PAST2835, 2/27/2015 9:57:38 AM
PLOTTED: 3/13/2015 5:17:49 AM
USER: PHAMTN | DWG VER: 1000
XREF1: BORDER.dwg
XREF2:
XREF3:
XREF4:

BLACK & VEATCH
Building a world of difference.
Black & Veatch Corporation
Virginia Beach, VA

BEDFORD REGIONAL WATER AUTHORITY
SMITH MOUNTAIN LAKE WTP & RAW WATER PUMPING STATION / INTAKE

ELECTRICAL
MCC-1 ONE-LINE DIAGRAM

DESIGNED: ZKO
DETAILED: DAH
CHECKED:
APPROVED:
DATE:

0 1/2 1
IF THIS BAR DOES NOT MEASURE 1" THEN DRAWING IS NOT TO FULL SCALE

PROJECT NO. 182262

E-30-701
SHEET
OF

F07000_PW
D7000

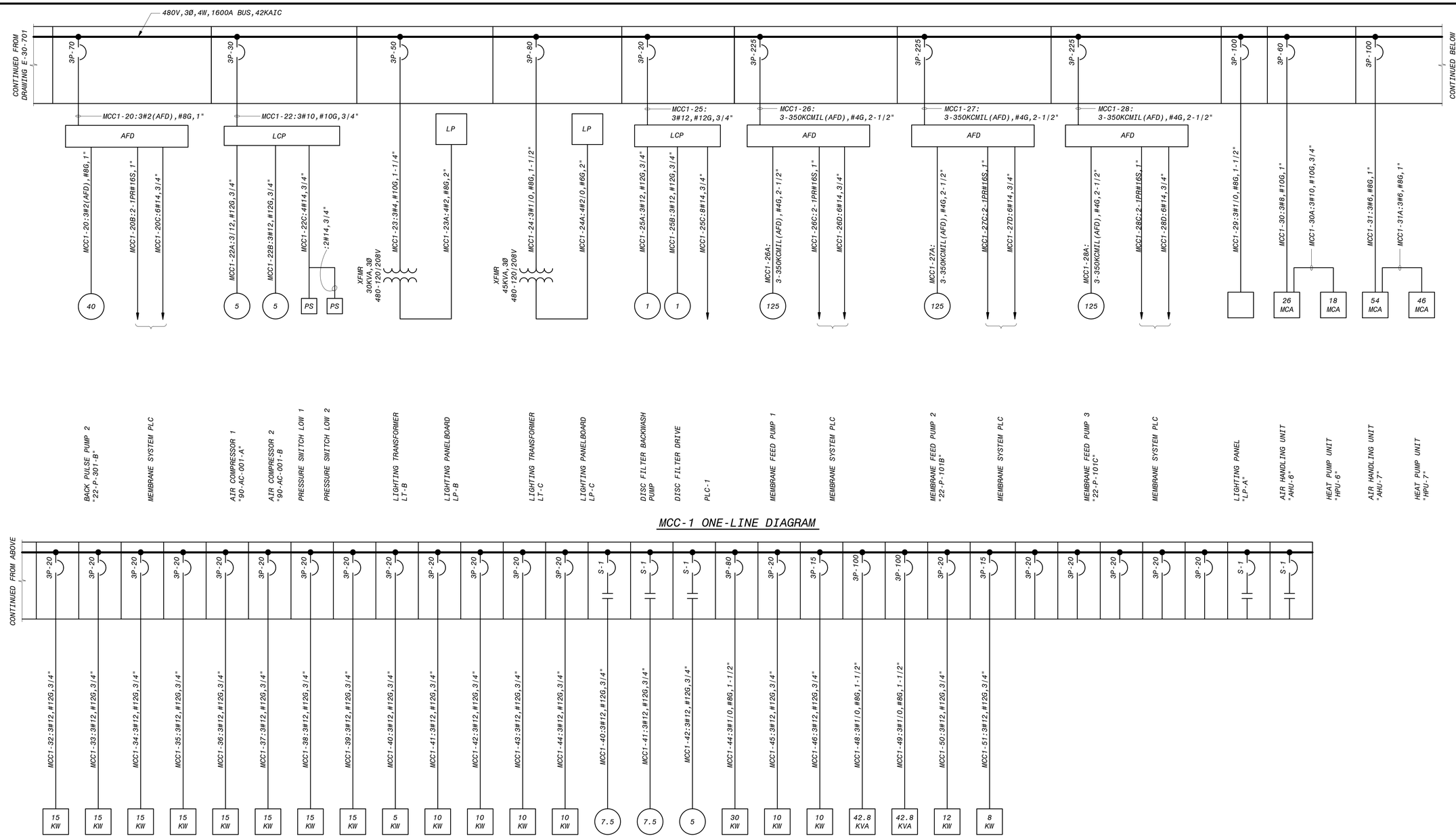

MCC-1 ONE-LINE DIAGRAM

MCC-1 ONE-LINE DIAGRAM

NOTES:

1. SEE DRAWING E-00-001 FOR ELECTRICAL LEGEND & ABBREVIATIONS AND GENERAL REQUIREMENTS.

PRELIMINARY - NOT FOR CONSTRUCTION

NO.	BY	CK	APP
B	JES	ZKO	
A	ZKO	SDS	

DATE	REVISIONS AND RECORD OF ISSUE
8/11/14	PROCESS REVISION
5/16/14	ISSUED FOR PRICING

50.3040 - Electrical Drawings
E-30-702.dwg
SAVED: PAST2835, 2/27/2015 1:09:39 PM
PLOTTED: 3/13/2015 5:22:19 AM
USER: PHAOMTN | DWG VER: 1000
XREF1: BORDER.dwg
XREF2:
XREF3:
XREF4:

BLACK & VEATCH
Building a world of difference.
Black & Veatch Corporation
Virginia Beach, VA

BEDFORD REGIONAL WATER AUTHORITY
SMITH MOUNTAIN LAKE WTP & RAW WATER PUMPING STATION / INTAKE

ELECTRICAL
MCC-1 ONE-LINE DIAGRAM

DESIGNED: ZKO
DETAILED: JES
CHECKED:
APPROVED:
DATE:

0 1/2 1
IF THIS BAR DOES NOT MEASURE 1" THEN DRAWING IS NOT TO FULL SCALE

PROJECT NO. 182262

E-30-702
SHEET
OF

F07000_PW
D7000